PHILIPS

Data handbook

PHILIPS Electronic components and materials

Electron tubes

Book T8 1986

Colour TV picture tubes and deflection units

Colour data graphic display tube assemblies

Elcoma – Philips Electronic Components and Materials Division – embraces a world-wide group of companies operating under the following names:

IBRAPE

RTC

Miniwatt

Signetics

Mullard

VALVO

PHILIPS

Elcoma offers you a technological partnership in developing your systems to the full. A partnership to which we can bring

- world-wide production and marketing
- know-how
- systems approach
- continuity
- broad product line
- fundamental research
- leading technologies
- applications support
- quality

DATA HANDBOOK SYSTEM

Our Data Handbook System comprises more than 60 books with specifications on electronic components, subassemblies and materials. It is made up of four series of handbooks:

ELECTRON TUBES	BLUE
SEMICONDUCTORS	RED
INTEGRATED CIRCUITS	PURPLE
COMPONENTS AND MATERIALS	GREEN

The contents of each series are listed on pages iv to viii.

The data handbooks contain all pertinent data available at the time of publication, and each is revised and reissued periodically.

When ratings or specifications differ from those published in the preceding edition they are indicated with arrows in the page margin. Where application information is given it is advisory and does not form part of the product specification.

Condensed data on the preferred products of Philips Electronic Components and Materials Division is given in our Preferred Type Range catalogue (issued annually).

Information on current Data Handbooks and on how to obtain a subscription for future issues is available from any of the Organizations listed on the back cover.
Product specialists are at your service and enquiries will be answered promptly.

ELECTRON TUBES (BLUE SERIES)

The blue series of data handbooks comprises:

T1 **Tubes for r.f. heating**

T2a **Transmitting tubes for communications, glass types**

T2b **Transmitting tubes for communications, ceramic types**

T3 **Klystrons**

T4 **Magnetrons for microwave heating**

T5 **Cathode-ray tubes**
Instrument tubes, monitor and display tubes, C.R. tubes for special applications

T6 **Geiger-Müller tubes**

T8 **Colour display systems**
Colour TV picture tubes, colour data graphic display tube assemblies, deflection units

T9 **Photo and electron multipliers**

T10 **Plumbicon camera tubes and accessories**

T11 **Microwave semiconductors and components**

T12 **Vidicon and Newvicon camera tubes**

T13 **Image intensifiers and infrared detectors**

T15 **Dry reed switches**

T16 **Monochrome tubes and deflection units**
Black and white TV picture tubes, monochrome data graphic display tubes, deflection units

SEMICONDUCTORS (RED SERIES)

The red series of data handbooks comprises:

S1 **Diodes**
Small-signal silicon diodes, voltage regulator diodes (< 1,5 W), voltage reference diodes, tuner diodes, rectifier diodes

S2a **Power diodes**

S2b **Thyristors and triacs**

S3 **Small-signal transistors**

S4a **Low-frequency power transistors and hybrid modules**

S4b **High-voltage and switching power transistors**

S5 **Field-effect transistors**

S6 **R.F. power transistors and modules**

S7 **Surface mounted semiconductors**

S8a **Light-emitting diodes**

S8b **Devices for optoelectronics**
Optocouplers, photosensitive diodes and transistors, infrared light-emitting diodes and infrared sensitive devices, laser and fibre-optic components

S9 **Power MOS transistors**

S10 **Wideband transistors and wideband hybrid IC modules**

S11 **Microwave transistors**

S12 **Surface acoustic wave devices**

S13 **Semiconductor sensors**

INTEGRATED CIRCUITS (PURPLE SERIES)

The purple series of data handbooks comprises:

EXISTING SERIES		Superseded by:
IC1	**Bipolar ICs for radio and audio equipment**	IC01N
IC2	**Bipolar ICs for video equipment**	IC02Na and IC02Nb
IC3	**ICs for digital systems in radio, audio and video equipment**	IC01N, IC02Na and IC02Nb
IC4	**Digital integrated circuits** CMOS HE4000B family	
IC5	**Digital integrated circuits – ECL** ECL10 000 (GX family), ECL100 000 (HX family), dedicated designs	IC08N
IC6	**Professional analogue integrated circuits**	IC03N and Supplement to IC11N
IC7	**Signetics bipolar memories**	
IC8	**Signetics analogue circuits**	IC11N
IC9	**Signetics TTL logic**	IC09N and IC15N
IC10	**Signetics Integrated Fuse Logic (IFL)**	IC13N
IC11	**Microprocessors, microcomputers and peripheral circuitry**	IC14N

NEW SERIES

IC01N	**Radio, audio and associated systems** Bipolar, MOS	(published 1985)
IC02Na	**Video and associated systems** Bipolar, MOS Types MAB8031AH to TDA1524A	(published 1985)
IC02Nb	**Video and associated systems** Bipolar, MOS Types TDA2501 to TEA1002	(published 1985)
IC03N	**Integrated circuits for telephony**	(published 1985)
IC04N	**HE4000B logic family** CMOS	
IC05N	**HE4000B logic family — incased ICs** CMOS	(published 1984)
IC06N*	**High-speed CMOS; PC74HC/HCT/HCU** Logic family	(published 1986)
IC07N	**High-speed CMOS; PC54/74HC/HCT/HCU — uncased ICs** Logic family	
IC08N	**ECL 10K and 100K logic families**	(published 1984)
IC09N	**TTL logic series**	(published 1984)
IC10N	**Memories** MOS, TTL, ECL	
IC11N	**Linear LSI**	(published 1985)
Supplement to IC11N	**Linear LSI**	(published 1986)
IC12N	**Semi-custom gate arrays & cell libraries** ISL, ECL, CMOS	
IC13N	**Semi-custom** Integrated Fuse Logic	(published 1985)
IC14N	**Microprocessors, microcontrollers & peripherals** Bipolar, MOS	(published 1985)
IC15N	**FAST TTL logic series**	(published 1984)

Note

Books available in the new series are shown with their date of publication.

* Supersedes the IC06N 1985 edition and the Supplement to IC06N issued Autumn 1985.

COMPONENTS AND MATERIALS (GREEN SERIES)

The green series of data handbooks comprises:

C1 **Programmable controller modules**
PLC modules, PC20 modules

C2 **Television tuners, coaxial aerial input assemblies, surface acoustic wave filters**

C3 **Loudspeakers**

C4 **Ferroxcube potcores, square cores and cross cores**

C5 **Ferroxcube for power, audio/video and accelerators**

C6 **Synchronous motors and gearboxes**

C7 **Variable capacitors**

C8 **Variable mains transformers**

C9 **Piezoelectric quartz devices**

C10 **Connectors**

C11 **Varistors, thermistors and sensors**

C12 **Potentiometers, encoders and switches**

C13 **Fixed resistors**

C14 **Electrolytic and solid capacitors**

C15 **Ceramic capacitors**

C16 **Permanent magnet materials**

C17 **Stepping motors and associated electronics**

C18 **Direct current motors**

C19 **Piezoelectric ceramics**

C20 **Wire-wound components for TVs and monitors**

C21* **Assemblies for industrial use**
HNIL FZ/30 series, NORbits 60-, 61-, 90-series, input devices

C22 **Film capacitors**

* To be issued shortly.

SELECTION GUIDE

90° COLOUR PICTURE TUBES

type	min. useful screen diagonal mm	max. overall length mm	neck diameter mm	V_f/I_f V/mA	$V_{a,g4}$ kV	V_{g3}	V_{g2} V	electron gun	appropriate deflection unit	page*
14 INCH										
A34EAC00X	335,4	339,4	22,5	6,3/300	23	28% of V_a	310-600	hi-bi potential	AT1625 series	23
A34EAC50X	335,4	342,1	22,5	6,3/300	23	31% of V_a	310-650	hi-bi potential	AT1625 series	39
A37-573X	335,4	342,4	29,1	6,3/685	25	20% of V_a	310-560	bi-potential	AT1205/10	93
A37-590X	335,4	347,1	29,1	6,3/685	25	28% of V_a	390-760	hi-bi potential	AT1206/20	115
A37-591X	335,4	351,5	29,1	6,3/685	25	28% of V_a	390-760	hi-bi potential	AT1206/21	137
A37-598X A37-599X	335,4	347,1	29,1	6,3/685	25	28% of V_a	390-760	hi-bi potential	AT1206/20	159
16 INCH										
A38EAC00X	382,3	370,9	22,5	6,3/300	23	28% of V_a	310-600	hi-bi potential	AT1635 series	167
A38EAC50X	382,3	373,1	22,5	6,3/300	23	31% of V_a	310-650	hi-bi potential	AT1635 series	183
A42-570X	382,3	373,4	29,1	6,3/685	25	20% of V_a	310-560	bi-potential	AT1215/00	233
A42-592X	382,3	378,6	29,1	6,3/685	25	28% of V_a	390-760	hi-bi potential	AT1216/20 AT1470/21	255
A42-593X	382,3	383,0	29,1	6,3/685	25	28% of V_a	390-760	hi-bi potential	AT1216/25 AT1470/25	281

* Data sheets of deflection units follow the data sheets of the relevant picture tube.

type	min. useful screen diagonal mm	max. overall length mm	neck diameter mm	V_f/I_f V/mA	$V_{a,g4}$ kV	V_{g3}	V_{g2} V	electron gun	appropriate deflection unit	page*
20 INCH										
A48EAC00X	480,0	431,6	22,5	6,3/300	25	31% of V_a	310-650	hi-bi potential	AT1645 series	307
A51-570X	480,0	429	29,1	6,3/685	25	20% of V_a	310-560	bi-potential	AT1237/50	365
A51-590X	480,0	436,4	29,1	6,3/685	25	28% of V_a	390-760	hi-bi potential	AT1236/20 AT1236/23 AT1480/20	429
A51-591X	480,0	441,0	29,1	6,3/685	25	28% of V_a	390-760	hi-bi potential	AT1236/25 AT1239/30	459
FLAT SQUARE COLOUR PICTURE TUBES										
36 cm										
A36EAM00X	355,6	344,5	22,5	6,3/300	23	31% of V_a	310-650	hi-bi potential	AT6060 series	71
41 cm										
A41EAM00X	406,4	373,6	22,5	6,3/300	23	31% of V_a	310-650	hi-bi potential	AT6050 series	211
51 cm										
A51EAL . . X	508,0	448,7	29,1	6,3/310	25	31% of V_a	575-825	hi-bi potential	AT6035 series	507
A51EAM00X	508,0	434,9	22,5	6,3/300	25	31% of V_a	310-650	hi-bi potential	AT6040 series	533
A51EBD . . X**	510,0	448,7	29,1	6,3/310	27,5	31% of V_a	575-825	hi-bi potential	AT6030 series	549
A51EBS . . X▲	510,0	448,7	29,1	6,3/310	27,5	31% of V_a	575-825	hi-bi potential	AT6030 series	575

* Data sheets of deflection units follow the data sheets of the relevant picture tube.
** With rimband type implosion protection.
▲ With reinforced envelope for push-through mounting.

110° COLOUR PICTURE TUBES

type	min. useful screen diagonal mm	max. overall length mm	neck diameter mm	V_f/I_f V/mA	$V_{a,g4}$ kV	V_{g3}	V_{g2} V	electron gun	appropriate deflection unit	page*
FLAT SQUARE COLOUR PICTURE TUBES										
51 cm										
A51EAK01X	508,0	368	29,1	6,3/310	25	31% of V_a	575-825	hi-bi potential	AT6020	485
59 cm										
A59EAK00X	590,0	398	29,1	6,3/310	25	31% of V_a	575-825	hi-bi potential	AT6010	659
66 cm										
A66EAK00X	660,0	428	29,1	6,3/310	25	31% of V_a	575-825	hi-bi potential	AT6000/01	719

* Data sheets of deflection units follow the data sheets of the relevant picture tube.

COLOUR DATA GRAPHIC DISPLAY TUBE ASSEMBLIES

type	min. useful screen diagonal mm	max. overall length mm	neck diameter mm	number of displayable pixels	V_f/I_f V/mA	$V_{a,g4}$ kV	V_{g3}	V_{g2} V	electron gun	screen finish	page
14 INCH											
M34EAQ00X	335,4	346,6	29,1	480 x 360	6,3/685	25	28% of V_a	390-760	hi-bi potential	etched	749
M34EAQ10X	335,4	346,6	29,1	480 x 360	6,3/685	25	28% of V_a	390-760	hi-bi potential	high gloss	749

GENERAL

LIST OF SYMBOLS

Symbols denoting electrodes/elements and electrode/element connections

f	Heater
k	Cathode
g	Grid: Grids are distinguished by means of an additional numeral; the electrode nearest to the cathode having the lowest number.
a	Anode
m	External conductive coating
m^1	Rim band
ℓ	Fluorescent screen
i.c.	Tube pin which must not be connected externally
n.c.	Tube pin which may be connected externally

Symbols denoting voltages

Unless otherwise stated, the reference point for electrode voltages is the cathode.

V	Symbol for voltage, followed by a subscript denoting the relevant electrode/element
V_f	Heater voltage
V_{pp}	Peak-to-peak value of a voltage
V_p	Peak value of a voltage
V_{GR}	Grid 1 voltage for visual extinction of focused raster (grid drive service)
V_{KR}	Cathode voltage for visual extinction of focused raster (cathode drive service)

Symbols denoting currents

I	Symbol for current followed by a subscript denoting the relevant electrode
I_f	Heater current (r.m.s. value)

Note: The symbols quoted represent the average value of the current, unless otherwise stated.

Symbols denoting powers

P_ℓ	Dissipation of the fluorescent screen
P_g	Grid dissipation

Symbols denoting capacitances

See IEC publication 100

Symbols denoting resistances and impedances

R	Symbol for resistance followed by a subscript for the relevant electrode pair. When only one subscript is given the second electrode is the cathode.
Z	Symbol for impedance followed by a subscript for the relevant electrode pair. When only one subscript is given the second electrode is the cathode.

Symbols denoting various quantities

L	Luminance
f	Frequency
H	Magnetic field strength

GENERAL OPERATIONAL RECOMMENDATIONS

INTRODUCTION

Equipment design should be based on the characteristics as stated in the data sheets. Where deviations from these general recommendations are permissible or necessary, statements to that effect will be made.

If applications are considered which are not referred to in the data sheets of the relevant tube type, extra care should be taken with circuit design to prevent the tube being overloaded due to unfavourable operating conditions.

SPREAD IN TUBE CHARACTERISTICS

The spread in tube characteristics is the difference between maximum and minimum values. Values not qualified as maximum or minimum are nominal ones. It is evident that average or nominal values, as well as spread figures, may differ according to the number of tubes of a certain type that are being checked. No guarantee is given for values of characteristics in settings substantially differing from those specified in the data sheets.

SPREAD AND VARIATION IN OPERATING CONDITIONS

The operating conditions of a tube are subject to spread and/or variation.

Spread in an operating condition is a **permanent** deviation from an average condition due to, e.g., component value deviations. The average condition is found from such a number individual cases taken at random that an increase of the number will have a negligible influence.

Variation in an operating condition is **non-permanent** (occurs as a function of time), e.g., due to supply voltage fluctuations. The average value is calculated over a period such that a prolongation of that period will have negligible influence.

LIMITING VALUES

Limiting values are in accordance with the applicable rating system as defined by IEC publication 134. Reference may be made to one of the following 3 rating systems.

Absolute maximum rating system. Absolute maximum ratings are limiting values of operating and environmental conditions applicable to any electronic device of a specified type as defined by its published data, and should not be exceeded under the worst probable conditions.
These values are chosen by the device manufacturer to provide acceptable serviceability of the device, taking no responsibility for equipment variations, environmental variations, and the effects of changes in operating conditions due to variations in the characteristics of the device under consideration and of all other electronic devices in the equipment.

The equipment manufacturer should design so that, initially and throughout life, no absolute maximum value for the intended service is exceeded with any device under the worst probable operating conditions with respect to supply voltage variation, equipment components spread and variation, equipment control adjustment, load variations, signal variation, environmental conditions, and spread or variations in characteristics of the device under considerations and of all other electronic devices in the equipment.

Design-maximum rating system. Design-maximum ratings are limiting values of operating and environmental conditions applicable to a bogey electronic device* of a specified type as defined by its published data, and should not be exceeded under the worst probable conditions.

These values are chosen by the device manufacturer to provide acceptable serviceability of the device, taking responsibility for the effects of changes in operating conditions due to variations in the characteristics of the electronic device under consideration.

The equipment manufacturer should design so that, initially and thoughout life, no design-maximum value for the intended service is exceeded with a bogey device under the worst probable operating conditions with respect to supply-voltage variation, equipment component variation, variation in characteristics of all other devices in the equipment, equipment control adjustment, load variation, signal variation and environmental conditions.

Design-centre rating system. Design-centre ratings are limiting values of operating and environmental conditions applicable to a bogey electronic device* of a specified type as defined by its published data, and should not be exceeded under average conditions.

These values are chosen by the device manufacturer to provide acceptable serviceability of the device in average applications, taking responsibility for normal changes in operating conditions due to rated supply-voltage variation, equipment component spread and variation, equipment control adjustment, load variation, signal variation, environmental conditions, and variations or spread in the characteristics of all electronic devices.

The equipment manufacturer should design so that, initially, no design-centre value for the intended service is exceeded with a bogey electronic device* in equipment operating at the stated normal supply voltage.
If the tube data specify limiting values according to more than one rating system the circuit has to be designed so that none of these limiting values is exceeded under the relevant conditions.

In addition to the limiting values given in the individual data sheets the directives in the following paragraphs should be observed.

HEATER SUPPLY

For maximum cathode life and optimum performance it is recommended that the heater supply be designed at the nominal heater voltage at zero beam current. Any deviation from this heater voltage has a detrimental effect on tube performance and life, and should therefore be kept to a minimum. In any case the deviations of the heater voltage must not exceed + 5% and −10% from the nominal value at zero beam current. Such deviations may be caused by:

- mains voltage fluctuations;
- spread in the characteristics of components such as transformers, resistors, capacitors, etc.;
- spread in circuit adjustments;
- operational variations.

* A bogey tube is a tube whose characteristics have the published nominal values for the type. A bogey tube for any particular application can be obtained by considering only those characteristics which are directly related to the application.

CATHODE TO HEATER VOLTAGE

The voltage between cathode and heater should be as low as possible and never exceed the limiting values given in the data sheets of the individual tubes. The limiting values relate to that side of the heater where the voltage between cathode and heater is greatest. The voltage between cathode and heater may be d.c., a.c., or a combination of both. Unless otherwise stated, the maximum values quoted indicate the maximum permissible d.c. voltage. If a combination of d.c. and a.c. voltages is applied, the peak value may be twice the rated V_{kf}; however, unless otherwise stated, this peak value shall never exceed 315 V. Unless otherwise stated, the V_{kf} max. holds for both polarities of the voltage; however, a positive cathode is usually the most favourable in view of insulation during life.

A d.c. connection should always be present between heater and cathode. Unless otherwise specified the maximum resistance should not exceed 1 MΩ; the maximum impedance at mains frequency should be less than 100 kΩ.

INTERMEDIATE ELECTRODES (between cathode and anode)

In no circumstances should the tube be operated without a d.c. connection between each electrode and the cathode. The total effective impedance between each electrode and the cathode should never exceed the published maximum value. However, no electrode should be connected directly to a high energy source. When such a connection is required, it should be made via a series resistor of not less than 1 kΩ.

CUT-OFF VOLTAGE

Curves showing the limits of the cut-off voltage as a function of grid 2 voltage are generally included in the data. The brightness control should be so dimensioned that it can handle any tube within the limits shown, at the appropriate grid 2 voltage.

The published limits are determined at an ambient illumination level of 10 lux. Because the brightness of a spot is in general greater than that of a raster of the same current, the cut-off voltage determined with the aid of a focused spot will be more negative by about 5 V as compared with that of a focused raster.

LUMINESCENT SCREEN

To prevent permanent screen damage, care should be taken:

- not to operate the tube with a stationary picture at high beam currents for extended periods;
- not to operate the tube with a stationary or slowly moving spot except at extremely low beam currents;
- if no e.h.t. bleeder is used, to choose the time constants of the cathode, grid 1, grid 2, and deflection circuits, such that sufficient beam current is maintained to discharge the e.h.t. capacitance before deflection has ceased after equipment has been switched off.

EXTERNAL CONDUCTIVE COATING

The external conductive coating must be connected to the chassis. The capacitance of this coating to the final accelerating electrode may be used to provide smoothing for the e.h.t. supply.

The coating is not a perfect conductor and in order to reduce electromagnetic radiation caused by the line time base and the picture content it may be necessary to make multiple connections to the coating. See also 'Flashover'.

METAL RIMBAND

An appreciable capacitance exists between the metal rimband and the internal conductive coating of the tube; its value is quoted in the individual data sheets. To avoid electric shock, a d.c. connection should be provided between the metal band and the external conductive coating. In receivers where the chassis can be connected directly to the mains there is a risk of electric shock if access is made to the metal band. To reduce the shock to the safe limit, it is suggested that a 2 MΩ resistor capable of handling the peak voltages be inserted between the metal band and the point of contact with the external conductive coating. This safety arrangement will provide the necessary insulation from the mains but in the event of flashover high voltages will be induced on the metal band. It is therefore recommended that the 2 MΩ resistor be bypassed by a 4,7 nF capacitor capable of withstanding the peak voltage determined by the voltage divider formed by this capacitor and the capacitance of the metal rimband to the internal conductive coating, and the anode voltage. The 4,7 nF capacitor also serves to improve e.h.t. smoothing by adding the rimband capacitance to the capacitance of the outer conductive coating.

FLASHOVER

High electric field strengths are present between the gun electrodes of picture tubes. Voltages between gun electrodes may reach values of 20 kV over approx. 1 mm. Although the utmost precautions are taken in the design and manufacture of the tubes, there is always a chance that flashover will occur. The resulting transient currents and voltages may be of sufficient magnitude to cause damage to the tube itself and to various components on the chassis. Arcing terminates when the e.h.t. capacitor is discharged. Therefore it is of vital importance to provide protective circuits with spark gaps and series resistors, which should be connected according to Fig. 1. No other connections between the outer conductive coating and the chassis are permissible.

As our picture tubes are manufactured in Soft-Flash technology, the peak discharge currents are limited to approx. 60 A, offering higher set reliability, optimum circuit protection and component savings (see also Technical Note 039). However this limited value of 60 A is still too high for the circuitry which is directly connected to the tube socket. Therefore Soft-Flash picture tubes should also be provided with spark gaps.

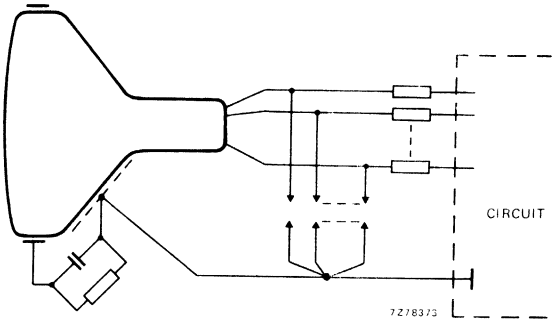

Fig. 1.

IMPLOSION PROTECTION

All picture tubes employ integral implosion protection and must be replaced with a tube of the same type number or recommended replacement to assure continued safety.

HANDLING

Although all picture tubes are provided with integral implosion protection, which meets the intrinsic protection requirements stipulated in the relevant part of IEC 65, care should be taken not to scratch or knock any part of the tube. **The tube assembly should never be handled by the neck, deflection unit or other neck components.**

A picture tube assembly can be lifted from the edge-down position by using the two upper mounting lugs. An alternative lifting method is firmly to press the hands against the vertical sides of the rimband.

When placing a tube assembly face downwards ensure that the screen rests on a soft pad of suitable material, kept free from abrasive substances. When lifting from the face-down position the hand should be placed under the areas of the faceplate close to the mounting lugs at diagonally opposite corners of the faceplate (Fig. 2).

When lifting from the face-up position the hands should be placed under the areas of the cone close to the mounting lugs at diagonally opposite corners of the cone (Fig. 3).

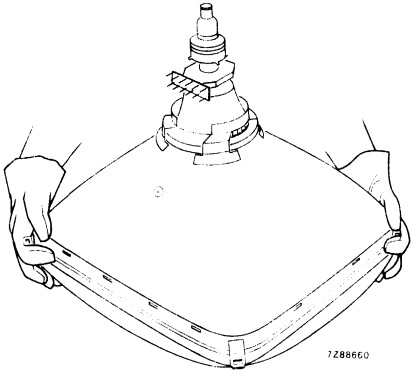

Fig. 2 Lifting tube assembly from face-down position.

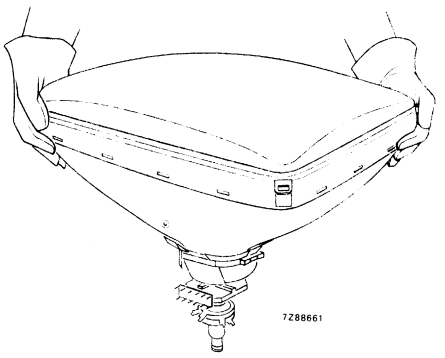

Fig. 3 Lifting tube assembly from face-up position.

In all handling procedures prior to insertion in the receiver cabinet there is a risk of personal injury as a result of severe accidental damage to the tube. It is therefore recommended that protective clothing should be worn, **particularly eye shielding.**

When suspending the tube assembly from the mounting lugs ensure that a **minimum of 2** are used; UNDER NO CIRCUMSTANCES HANG THE TUBE ASSEMBLY FROM ONE LUG.

If provided the slots in the rimband of colour picture tubes are used in the mounting of the degaussing coils. It is not recommended to suspend the tube assembly from one or more of these slots as permanent deformation to the rimband can occur.

Remember when replacing or servicing the tube assembly that a residual electrical charge may be carried by the anode contact and also the external coating if not earthed. Before removing the tube assembly from the equipment, earth the external coating and short the anode contact to the coating.

PACKING

The packing provides protection against tube damage under normal conditions of shipment or handling. Observe any instructions given on the packing and handle accordingly. The tube should under no circumstances be subjected to accelerations greater than 350 m/s^2.

MOUNTING

Unless otherwise specified on the data sheets for individual tubes there are no restrictions on the position of mounting.

The tube socket should not be rigidly mounted but should have flexible leads and be allowed to move freely.

It is very desirable that tubes should not be exposed to strong electrostatic and magnetic fields.

DIMENSIONS

In designing the equipment the tolerances given on the dimensional drawings should be considered. Under no circumstances should the equipment be designed around dimensions taken from individual tubes.

TYPE DESIGNATION

Pro electron type designation system

Example of picture tube: A66-540X

- application category
  - A = TV tube for domestic application
  - M = display tube for monitor application
- face diagonal in cm
- screen phosphor category
- series number

Worldwide type designation system

Example of picture tube: A51EAL00X

- application category
  - A = TV tube for domestic application
  - M = display tube for monitor application
- minimum useful screen diagonal in cm
- screen phosphor category
- member of family code
- family code

Example of picture tube assembly: M34EAQ10X01

- application category
  - A = TV tube for domestic application
  - M = display tube for monitor application
- minimum useful screen diagonal in cm
- integral neck components
- screen phosphor category
- member of family code
- family code

KELLY CHART

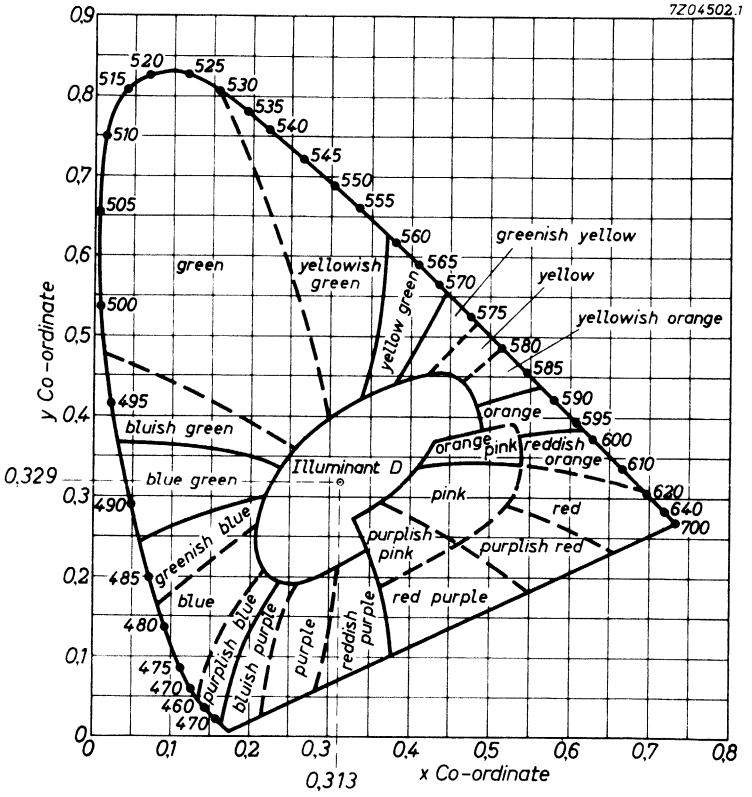
7Z04502.1
y Co-ordinate
x Co-ordinate
0,329
0,313
Illuminant D
green
yellowish green
yellow green
greenish yellow
yellow
yellowish orange
orange
orange pink
reddish orange
pink
red
purplish pink
purplish red
red purple
reddish purple
purple
bluish purple
purplish blue
blue
greenish blue
blue green
bluish green
505
510
515
520
525
530
535
540
545
550
555
560
565
570
575
580
585
590
595
600
610
620
640
700
495
490
485
480
475
470
460
470

COLOUR TV PICTURE TUBES AND DEFLECTION UNITS

Hi-Bri COLOUR PICTURE TUBE

- 90° deflection
- In-line, thermally stable hi-bi potential gun
- 22,5 mm neck diameter
- Hi-Bri technology
- Pigmented phosphors
- Slotted shadow mask optimized for minimum moiré
- Fine pitch over entire screen
- Phosphor lines follow glass contour
- Quick heating low-power cathodes
- Soft-flash technology
- Internal magnetic shield
- Reinforced envelope for push-through mounting
- Combined with a deflection unit of the AT1625 series, it forms a self-converging and raster correction free assembly

QUICK REFERENCE DATA

Deflection angle	90°
Minimum useful screen diagonal	34 cm
Overall-length	334 mm
Neck diameter	22,5 mm
Heating	6,3 V, 300 mA
Focusing voltage	28% of anode voltage

ELECTRON-OPTICAL DATA

Electron gun system		unitized triple-aperture electrodes
Focusing method		electrostatic
Focus lens		hi-bi-potential
Deflection method		magnetic
Deflection angles		
diagonal		approx. 90°
horizontal		approx. 78°
vertical		approx. 60°

ELECTRICAL DATA

Capacitances		
anode to external conductive coating including rimband	$C_{a(m+m')}$	max. 1600 pF min. 800 pF
grid 1 to all other electrodes	C_{g1}	15 pF
cathode of each gun to all other electrodes	C_{kR}, C_{kG}, C_{kB}	4 pF
focusing electrode to all other electrodes	C_{g3}	4 pF
Heating		indirect by a.c. or d.c.
heater voltage	V_f	6,3 V
heater current	I_f	300 mA

OPTICAL DATA

Screen	metal-backed vertical phosphor stripes; phosphor lines follow glass contour
Screen finish	satinized
Useful screen dimensions	
diagonal	min. 335,4 mm
horizontal axis	min. 280,8 mm
vertical axis	min. 210,6 mm
area	min. 580 cm^2
Phosphors	
red	pigmented europium activated rare earth
green	sulphide type
blue	pigmented sulphide type
Centre-to-centre distance of vertical identical colour phosphor stripes, at screen centre	0,65 mm
Light transmission of face glass at centre	68%

MECHANICAL DATA (see also the figures on the following pages)

Overall length	334,4 ± 5 mm
Neck diameter	$22{,}5^{+1{,}4}_{-0{,}7}$ mm*
Bulb dimensions	
diagonal	max. 368 mm
width	max. 317 mm
height	max. 248 mm
Base	JEDEC B8-288
Anode contact	small cavity contact J1-21, IEC 67-III-2
Mounting position	anode contact on top
Net mass	approx. 6 kg

Handling

During shipment and handling the tube should not be subjected to accelerations greater than 35g in any direction.

* In the region of 66 mm from the neck end, the maximum diameter is 23,2 mm.

MECHANICAL DATA (continued)

Notes are given after the drawings.

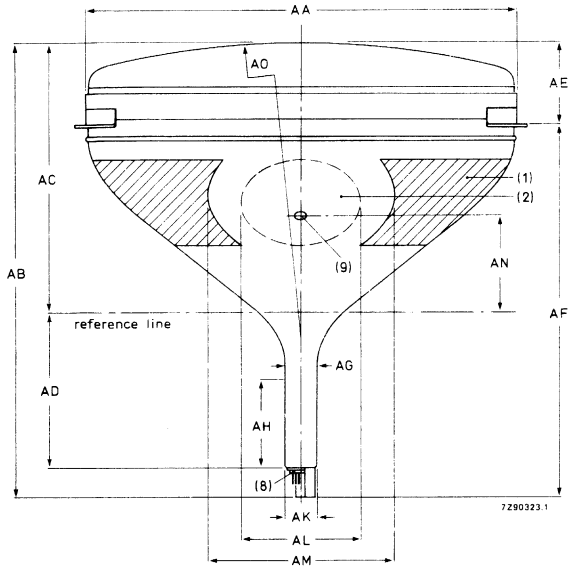

Dimensions in mm

AA	319 max
AB	339,4 max
AC	200,5 ± 4
AD	116,5 ± 1
AE	63,5 max
AF	278 max
AG	$22{,}5^{+1{,}4}_{-0{,}7}$
AH	66
AK	22,5 ± 0,7
AL	90 ± 10
AM	140 ± 3
AN	72 ± 3,2
AO	R575 approx.

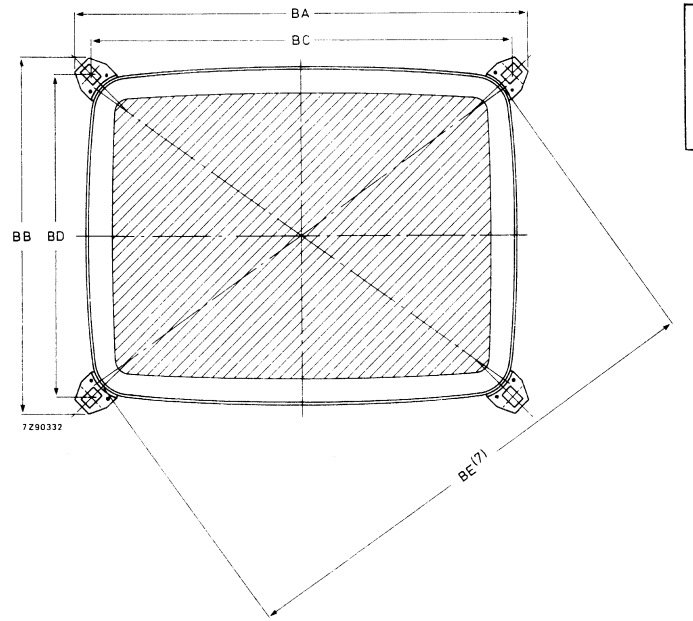

Dimensions in mm

BA	336 max
BB	268 max
BC	311,4
BD	243,2
BE	375 max

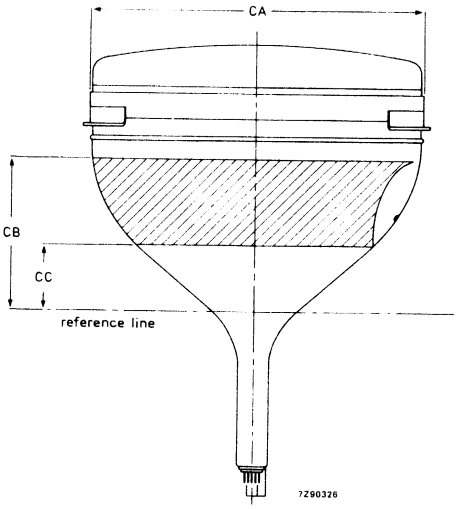

Dimensions in mm

CA	251 max
CB	114 min
CC	49 max

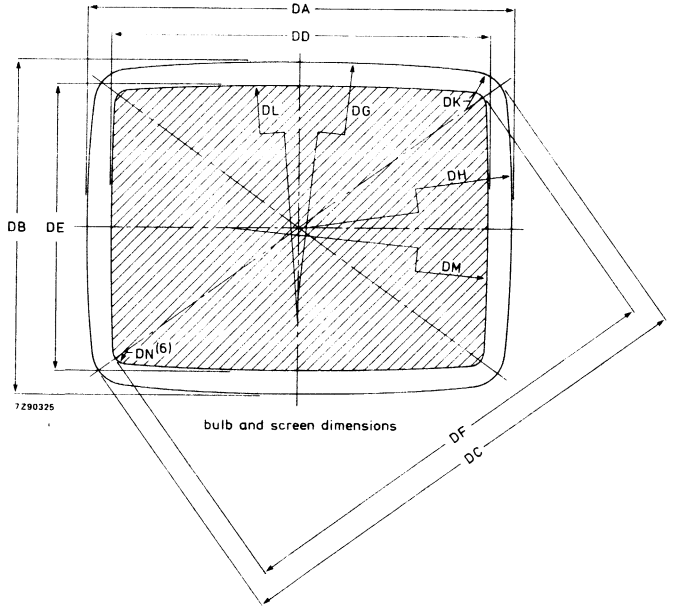

Dimensions in mm

DA	315,4 ± 1,6
DB	246,4 ± 1,6
DC	366,4 ± 1,6
DD	280,8 min
DE	210,6 min
DF	335,4 min
DG	R1545
DH	R1173
DK	R27,1
DL	R2773
DM	R2299
DN	R11,6

MECHANICAL DATA (continued)

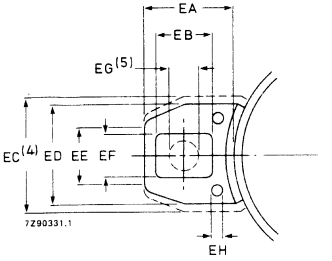

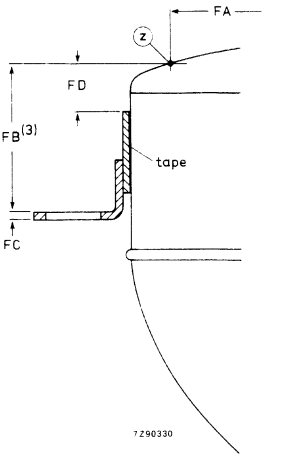

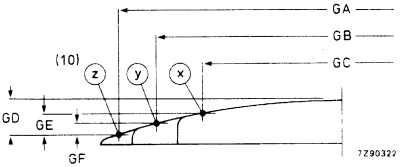

Dimensions in mm

EA	22,5 ± 0,2
EB	14 ± 0,2
EC	29 max
ED	25
EE	14
EF	11 ± 0,2
EG	7,5
EH	3 min

Dimensions in mm

GA	335,4
GB	280,8
GC	210,6
GD	25 ± 2,0
GE	15,3 ± 2,0
GF	7,6 ± 2,0

Dimensions in mm

FA	335,4
FB	35,5 ± 1,8
FC	2
FD	12 min

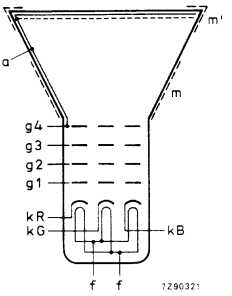

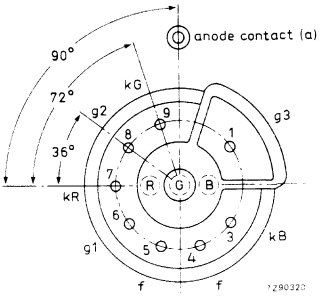

Notes to outline drawings on the preceding pages

1. Configuration of outer conductive coating may be different, but will contain the contact areas as shown in the drawing.
2. To clean this area, wipe only with a soft lintless cloth.
3. One of the four mounting lugs may deviate (1,5 mm max.) from the plane of the other three lugs. This deviation is incorporated in the tolerance of ± 1,8 mm.
4. Minimum space to be reserved for mounting lug.
5. The position of the mounting screw in the cabinet must be within a circle of 7,5 mm diameter drawn around the true geometrical positions, i.e. the corners of a rectangle of 311,4 mm x 243,2 mm.
6. Co-ordinates for radius R = 11,6 mm; x = 126,98 mm, y = 90,76 mm.
7. Maximum dimensions in plane of lugs.
8. The socket for this base should not be rigidly mounted; it should have flexible leads and be allowed to move freely. After mounting of the tube in the cabinet note that the position of the base can fall within a circle, having a diameter of max. 50 mm, concentric with an imaginary tube axis.
9. Small cavity contact J1-21, IEC 67-III-2.
10. The X, Y and Z reference points are located on the outside surface of the face plate at the intersection of the minor, major and diagonal screen axis respectively, with the minimum published screen.

Reference line gauge; G-R90CJ10

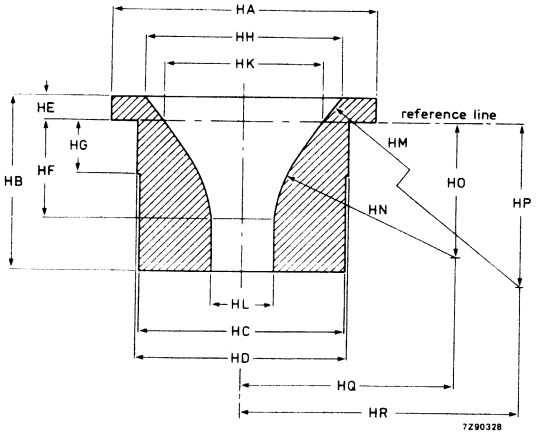

Dimensions in mm

HA	ϕ100,00
HB	65,00
HC	ϕ78,70
HD	ϕ80,00
HE	9,20 ± 0,02
HF	36,22 ± 0,02
HG	20,00
HH	ϕ75,48 ± 0,02
HK	ϕ60,77 ± 0,02
HL	$\phi 23{,}90^{+0{,}04}_{-0}$
HM	R220,00
HN	R70,00
HO	50,30
HP	132,71
HQ	80,52
HR	205,85

Maximum cone contour

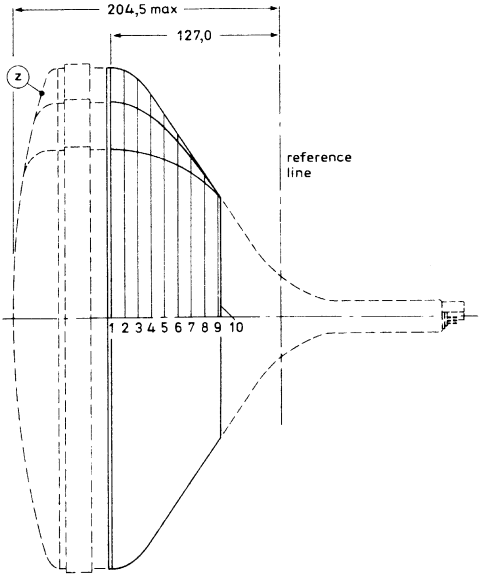

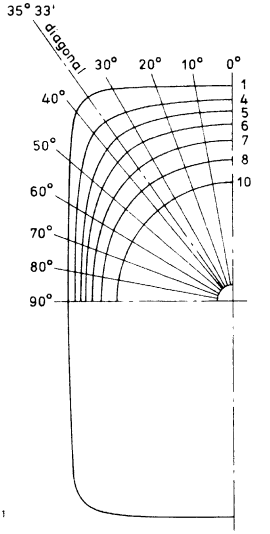

Dimensions in mm

section	nom. distance from reference line	distance from centre (max. values)														
		0°	10°	20°	25°	30°	32° 30'	diag. axes	37° 30'	40°	45°	50°	60°	70°	80°	90°
1	127,0	160,3	162,5	169,4	174,8	181,6	185,2	186,7	186,2	183,8	171,7	160,1	143,3	133,0	127,3	125,5
2	117,0	159,5	161,6	168,3	173,5	180,1	183,5	185,3	184,7	181,8	169,8	158,7	142,5	132,3	126,8	125,0
3	107,0	156,4	158,3	164,2	168,5	173,8	176,4	177,7	177,1	174,5	164,7	155,0	140,1	130,5	125,2	123,5
4	97,0	149,9	151,5	156,0	159,2	162,7	164,2	165,1	164,9	163,5	157,0	149,3	136,1	127,3	122,3	120,7
5	87,0	141,3	142,6	146,2	148,5	150,3	150,8	150,8	150,3	149,2	145,3	140,1	130,0	122,6	118,3	116,9
6	77,0	131,1	132,2	134,5	135,7	136,4	136,5	136,4	136,1	135,4	133,4	130,4	123,4	117,4	113,7	112,4
7	67,0	119,0	119,7	120,9	121,5	121,9	121,9	121,9	121,8	121,5	120,6	119,2	115,3	111,2	108,2	107,1
8	57,0	105,7	105,9	106,5	106,8	107,0	107,0	107,0	107,0	107,0	106,7	106,2	104,7	102,7	100,9	100,0
9	47,0	91,6	91,6	91,7	91,8	91,8	91,8	91,9	91,9	91,9	91,8	91,7	91,5	91,1	90,7	90,5
10	45,0	88,6	88,7	88,7	88,8	88,8	88,8	88,8	88,7	88,7	88,7	88,6	88,5	88,3	88,2	88,1

Base JEDEC B8-288

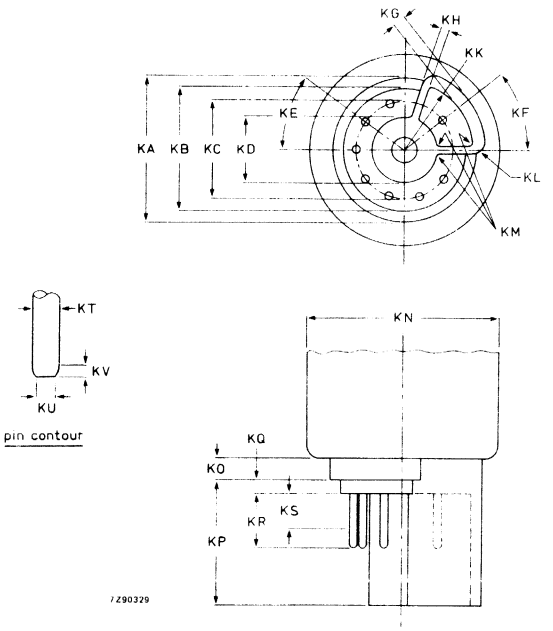

Dimensions in mm

KA	17,9 max
KB	15,4 max
KC	12,0
KD	7,9 min; 8,2 max
KE	36°
KF	38°
KG	1,3 max
KH	0,8 min; 1,0 max
KK	R8,66 ± 0,1
KL	R1,0
KM	R0,25
KN	23,2 max
KO	2,7 max
KP	15,4 ± 0,2
KQ	1,6 max
KR	6.85 max
KS	4,5 min
KT	1,016 ± 0,076
KU	0,63 max
KV	0,4 min

TYPICAL OPERATING CONDITIONS

The voltages are specified with respect to grid 1.

Anode voltage	$V_{a,g4}$	23 kV
Grid 3 (focusing electrode) voltage	V_{g3}	6,1 to 6,9 kV
Grid 2 voltage for a spot cut-off voltage V_k = 120 V	V_{g2}	310 to 600 V
Luminance at the centre of the screen*	L	165 cd/m^2

* Tube settings adjusted to produce white of 6500K + 7 M.P.C.D. (x = 0,313, y = 0,329) focused raster, current density 0,4 μA/cm^2.

EQUIPMENT DESIGN VALUES

The values are valid for anode voltages between 20 and 27,5 kV.
The voltages are specified with respect to grid 1.

Grid 3 (focusing electrode) voltage	V_{g3}	26,6 to 29,8% of anode voltage
Grid 2 voltage and cathode voltage for visual extinction of focused spot	V_{g2} and V_k	see cut-off design chart
Difference in cut-off voltages between guns in any tube	ΔV_k	lowest value > 80% of highest value
Video drive characteristics		see graphs*
Grid 3 (focusing electrode) current	I_{g3}	−5 to +5 μA
Grid 2 current	I_{g2}	−5 to +5 μA
Grid 1 current under cut-off conditions	I_{g1}	−5 to +5 μA

To produce white of 6500K + 7 M.P.C.D.
(CIE co-ordinates x = 0,313, y = 0,329)

Percentage of the total anode current supplied by each gun (typical)

red gun		38,3%
green gun		35,8%
blue gun		25,9%

Ratio of anode currents

red gun to green gun	min.	0,8
	average	1,1
	max.	1,4
red gun to blue gun	min.	1,1
	average	1,5
	max.	1,9
blue gun to green gun	min.	0,5
	average	0,7
	max.	0,9

* For optimum picture performance it is recommended that the cathodes are not driven below + 10 V.

LIMITING VALUES (Design maximum rating system unless otherwise stated)

The voltages are specified with respect to grid 1.

Anode voltage	$V_{a,g4}$	max.	27,5	kV	notes 1, 2, 3
		min.	20	kV	notes 1 and 4
Long-term average current for three guns	I_a	max.	750	μA	note 5
Grid 3 (focusing electrode) voltage	V_{g3}	max.	11	kV	
Grid 2 voltage, peak	V_{g2p}	max.	1000	V	
Cathode voltage					
positive	V_k	max.	400	V	
positive operating cut-off	V_k	max.	200	V	
negative	$-V_k$	max.	0	V	
negative peak	$-V_{kp}$	max.	2	V	
Heater voltage	V_f	6,3 V	+5 % −10 %		notes 1 and 6
Heater-cathode voltage					
heater negative with respect to cathode after equipment warm-up period	V_{kf}	max.	200	V	
heater positive with respect to cathode	$-V_{kfp}$	peak	200	V	note 1
	$-V_{kf}$	max. (d.c. component value)	0	V	

Notes

1. Absolute maximum rating system.
2. The X-ray dose rate remains below the acceptable value of 0,5 mR/h, measured with ionization chamber when the tube is used within its limiting values.
3. During adjustment on the production line this value is likely to be surpassed considerably. It is therefore strongly recommended to first make the necessary adjustments for normal operation without picture tube.
4. Operation of the tube at lower voltages impairs the luminance and resolution.
5. The short-term average anode current should be limited by circuitry to 1000 μA.
6. For maximum cathode life and optimum performance, it is recommended that the heater supply be designed for 6,3 V at zero beam current.

FLASHOVER PROTECTION

With the high voltage used with this tube (max. 27,5 kV) internal flashovers may occur. As a result of the Soft-Flash technology these flashover currents are limited to approx. 60 A offering higher set reliability, optimum circuit protection and component savings.

Primary protective circuitry using properly grounded spark gaps and series isolation resistors (preferably carbon composition) is still necessary to prevent tube damage. The spark gaps should be connected to all picture tube electrodes at the socket according to the figure below; they are not required on the heater pins. No other connections between the outer conductive coating and the chassis are permissible. The spark gaps should be designed for a breakdown voltage at the focusing electrode (g3) of 12 kV ($1,5 \times V_{g3}$ max. at $V_{a,g4} = 25$ kV), and at the other electrodes of 1,5 to 2 kV.

The values of the series isolation resistors should be as high as possible (min. 1,5 kΩ) without causing deterioration of the circuit performance. The resistors should be able to withstand an instantaneous surge of 20 kV for the focusing circuit and 12 kV for the remaining circuits without arcing.

Additional information is available on request.

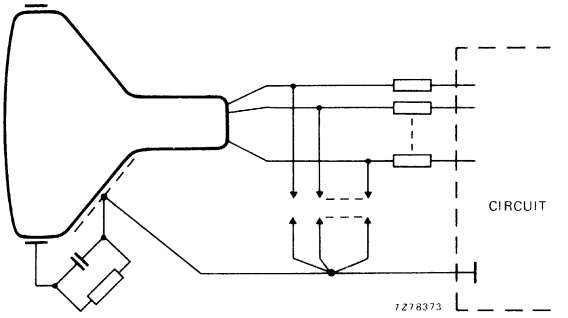

BEAM CORRECTIONS

Maximum required correction for register, as measured at the centre of the screen in any direction	0,08 mm
Centre convergence displacement of the blue and red beams is contained within a circle; max. diameter of circle	4 mm
Centre convergence displacement between the green beam and converged blue and red beams is contained within a circle; maximum diameter of circle	2 mm
Maximum centring error in any direction after colour purity, static convergence, and horizontal centre line correction, measured with deflection coils in nominal position	4 mm

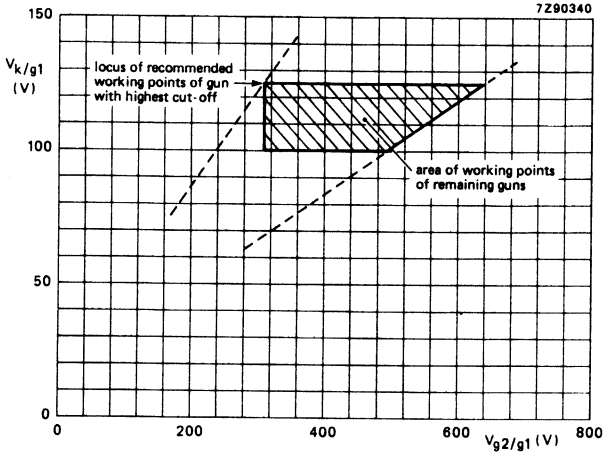

Spot cut-off design chart.

Grid 2 voltage (V_{g2}) adjusted for highest gun spot cut-off voltage V_k = 125 V.

Remaining guns adjusted for spot cut-off by means of cathode voltage

V_{g2} range 310 to 630 V;

V_k range 100 to 125 V.

Adjustment procedure:

Set the cathode voltage (V_k) for each gun at 125 V; increase the grid 2 voltage (V_{g2}) from approx. 300 V to the value at which one of the colours becomes just visible. Now decrease the cathode voltage of the remaining guns so that the other colours also become visible.

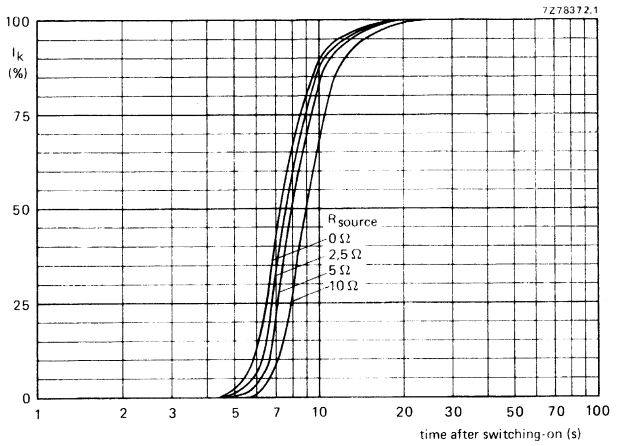

Cathode heating time after switching on, measured under typical operating conditions.

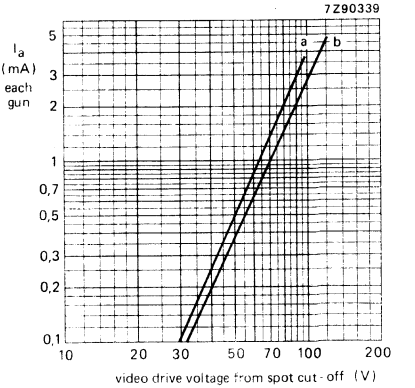

Typical cathode drive characteristics.

V_f = 6,3 V;

$V_{a,g4}$ = 23 kV;

V_{g3} adjusted for focus

V_{g2} (each gun) adjusted to provide spot cut-off for V_k = 100 V (curve a), V_k = 125 V (curve b).

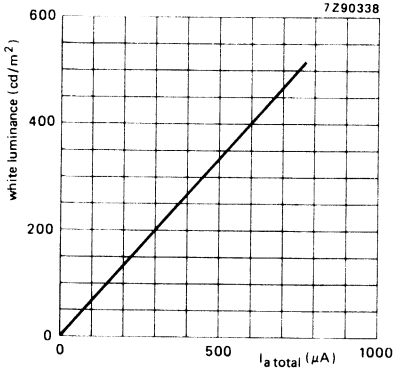

Luminance at the centre of the screen as a function of I_{total}.

$V_{a,g4}$ = 23 kV, V_f = 6,3 V, V_{g3} adjusted for optimum focus.

Scanned area = 280,8 mm x 210,6 mm; CIE co-ordinates x = 0,313, y = 0,329.

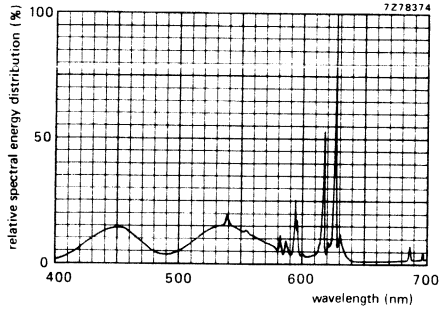

Simultaneous excitation of red, green and blue phosphor, measured in a tube, to produce white of x = 0,313, y = 0,329. Exact shape of the peaks depends on the resolution of the measuring apparatus.

Colour co-ordinates:

	x	y
red	0,635	0,340
green	0,315	0,600
blue	0,150	0,060

DEGAUSSING

The picture tube has an internal magnetic shield. This shield and the shadow mask with its suspension system may be provided with an automatic degaussing system, consisting of one magnetic coil winding mounted on the cone of the picture tube.

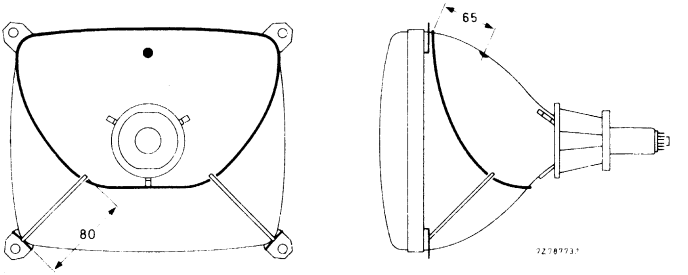

Position of degaussing coil on the picture tube; dimensions are given in mm.

For proper degaussing an initial magnetomotive force (m.m.f.) of 600 ampere-turns is required in the coil. This m.m.f. has to be gradually decreased by appropriate degaussing circuitry. In the steady state, no significant m.m.f. should remain in the coil ($\leqslant$ 0,6 ampere-turns). If single-phase power rectification is employed in the t.v. circuitry, provision should be included to prevent asymmetric distortion of the a.c. voltage applied to the degaussing circuit due to high d.c. inrush currents. An example of a degaussing circuit and coil data for various mains voltages are given below.

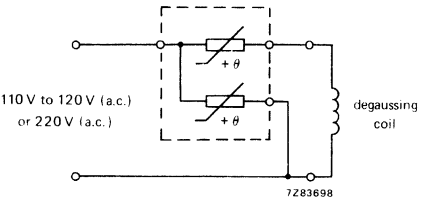

Degaussing circuit using dual PTC thermistor.

Data of degaussing coil

	110 V (a.c.) mains	220 V (a.c.) mains
Circumference	90 cm	90 cm
Number of turns	60	120
Copper wire diameter	0,45 mm	0,3 mm
Resistance	6 Ω	27 Ω
Catalogue number of appropriate dual PTC thermistor	2322 662 98013	2322 662 98009

Hi-Bri COLOUR PICTURE TUBE

- 90° deflection
- In-line, thermally stable hi-bi potential A R T* gun
- 22,5 mm neck diameter
- Hi-Bri technology
- Pigmented phosphors
- Slotted shadow mask optimized for minimum moiré
- Fine pitch over entire screen
- Phosphor lines follow glass contour
- Quick heating low-power cathodes
- Soft-flash technology
- Internal magnetic shield
- Reinforced envelope for push-through mounting
- Combined with a deflection unit of the AT1625 series, it forms a self-converging and raster correction free assembly

QUICK REFERENCE DATA

Deflection angle	90°
Minimum useful screen diagonal	34 cm
Overall-length	337 mm
Neck diameter	22,5 mm
Heating	6,3 V, 300 mA
Focusing voltage	31% of anode voltage

* Aberration Reducing Triode.

ELECTRON-OPTICAL DATA

Electron gun system		unitized triple-aperture electrodes
Focusing method		electrostatic
Focus lens		hi-bi-potential
Deflection method		magnetic
Deflection angles		
diagonal		approx. 90°
horizontal		approx. 78°
vertical		approx. 60°

ELECTRICAL DATA

Capacitances		
anode to external conductive coating including rimband	$C_{a(m+m')}$	max. 1600 pF min. 800 pF
grid 1 to all other electrodes	C_{g1}	15 pF
cathode of each gun to all other electrodes	C_{kR}, C_{kG}, C_{kB}	4 pF
focusing electrode to all other electrodes	C_{g3}	4 pF
Heating		indirect by a.c. or d.c.
heater voltage	V_f	6,3 V
heater current	I_f	300 mA

OPTICAL DATA

Screen	metal-backed vertical phosphor stripes; phosphor lines follow glass contour
Screen finish	satinized
Useful screen dimensions	
diagonal	min. 335,4 mm
horizontal axis	min. 280,8 mm
vertical axis	min. 210,6 mm
area	min. 580 cm^2
Phosphors	
red	pigmented europium activated rare earth
green	sulphide type
blue	pigmented sulphide type
Centre-to-centre distance of vertical identical colour phosphor stripes, at screen centre	0,65 mm
Light transmission of face glass at centre	68%

MECHANICAL DATA (see also the figures on the following pages)

Overall length	337,1 ± 5 mm
Neck diameter	$22{,}5^{+1{,}4}_{-0{,}7}$ mm*
Bulb dimensions	
diagonal	max. 368 mm
width	max. 317 mm
height	max. 248 mm
Base	JEDEC B8-288
Anode contact	small cavity contact J1-21, IEC 67-III-2
Mounting position	anode contact on top
Net mass	approx. 6 kg

Handling

During shipment and handling the tube should not be subjected to accelerations greater than 35g in any direction.

MECHANICAL DATA (continued)

Notes are given after the drawings.

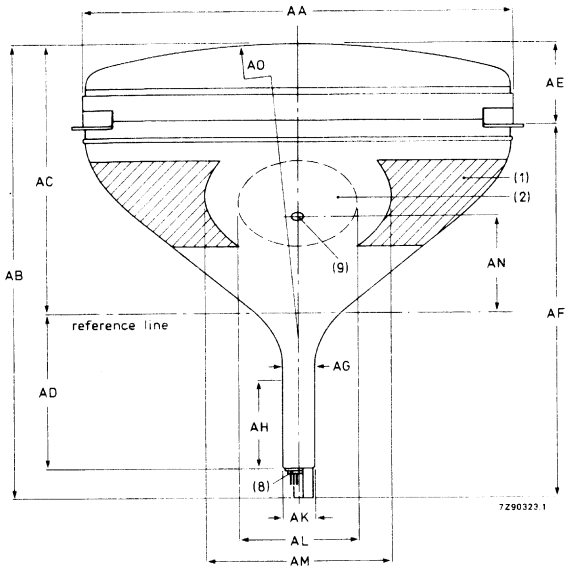

Dimensions in mm

AA	319 max
AB	342,1 max
AC	200,5 ± 4
AD	118,7 ± 1
AE	63,5 max
AF	281 max
AG	$22{,}5^{+1{,}4}_{-0{,}7}$
AH	66
AK	22,5 ± 0,7
AL	90 ± 10
AM	140 ± 3
AN	72 ± 3,2
AO	R575 approx.

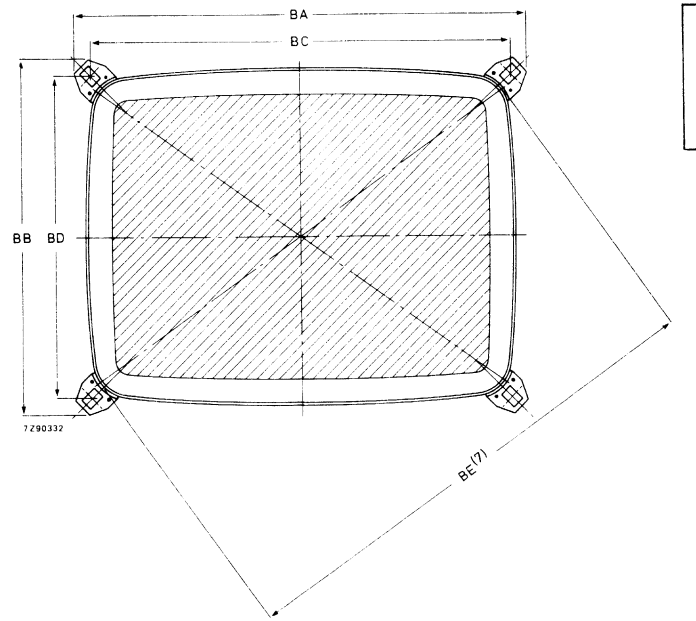

Dimensions in mm

BA	336 max
BB	268 max
BC	311,4
BD	243,2
BE	375 max

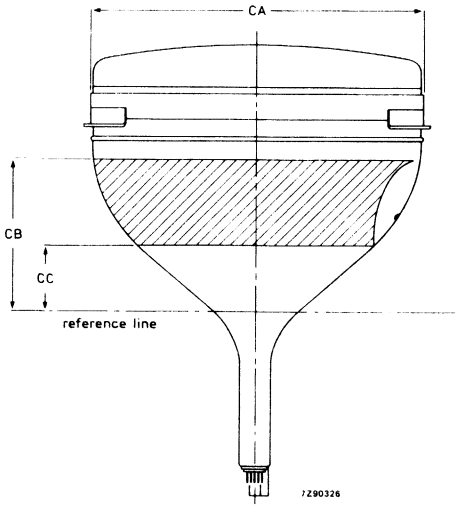

Dimensions in mm

CA	251 max
CB	114 min
CC	49 max

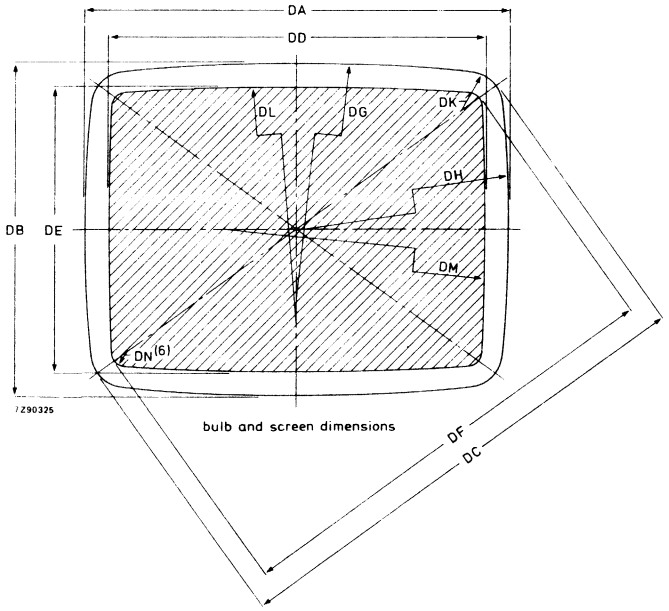

Dimensions in mm

DA	315,4 ± 1,6
DB	246,4 ± 1,6
DC	366,4 ± 1,6
DD	280,8 min
DE	210,6 min
DF	335,4 min
DG	R1545
DH	R1173
DK	R27,1
DL	R2773
DM	R2299
DN	R11,6

MECHANICAL DATA (continued)

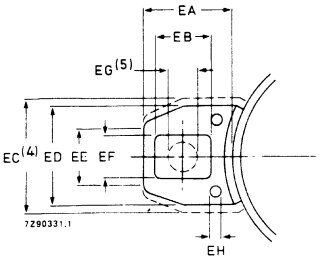

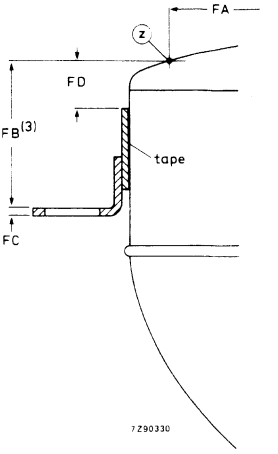

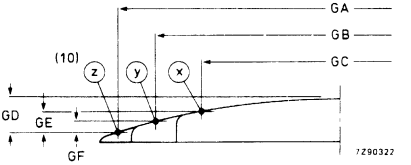

Dimensions in mm

EA	22,5 ± 0,2
EB	14 ± 0,2
EC	29 max
ED	25
EE	14
EF	11 ± 0,2
EG	7,5
EH	3 min

Dimensions in mm

GA	335,4
GB	280,8
GC	210,6
GD	25 ± 2,0
GE	15,3 ± 2,0
GF	7,6 ± 2,0

Dimensions in mm

FA	335,4
FB	35,5 ± 1,8
FC	2
FD	12 min

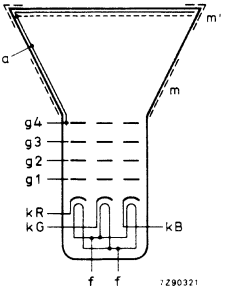

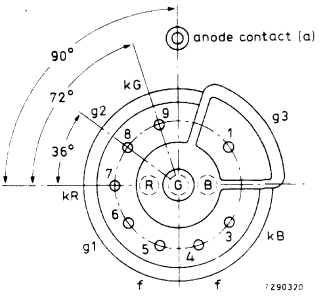

Notes to outline drawings on the preceding pages

1. Configuration of outer conductive coating may be different, but will contain the contact areas as shown in the drawing.
2. To clean this area, wipe only with a soft lintless cloth.
3. One of the four mounting lugs may deviate (1,5 mm max.) from the plane of the other three lugs. This deviation is incorporated in the tolerance of ± 1,8 mm.
4. Minimum space to be reserved for mounting lug.
5. The position of the mounting screw in the cabinet must be within a circle of 7,5 mm diameter drawn around the true geometrical positions, i.e. the corners of a rectangle of 311,4 mm x 243,2 mm.
6. Co-ordinates for radius R = 11,6 mm; x = 126,98 mm, y = 90,76 mm.
7. Maximum dimensions in plane of lugs.
8. The socket for this base should not be rigidly mounted; it should have flexible leads and be allowed to move freely. After mounting of the tube in the cabinet note that the position of the base can fall within a circle, having a diameter of max. 50 mm, concentric with an imaginary tube axis.
9. Small cavity contact J1-21, IEC 67-III-2.
10. The X, Y and Z reference points are located on the outside surface of the face plate at the intersection of the minor, major and diagonal screen axis respectively, with the minimum published screen.

Reference line gauge; G-R90CJ10

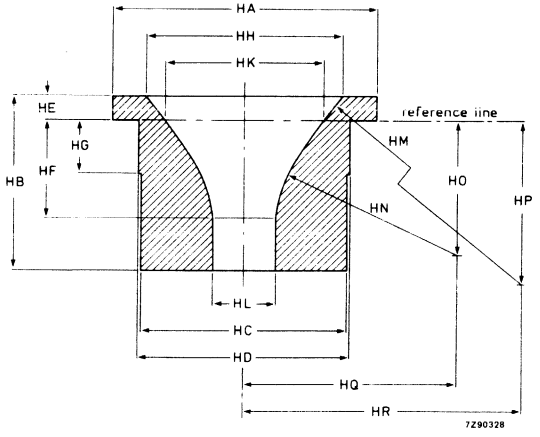

Dimensions in mm

HA	ϕ100,00
HB	65,00
HC	ϕ78,70
HD	ϕ80,00
HE	9,20 ± 0,02
HF	36,22 ± 0,02
HG	20,00
HH	ϕ75,48 ± 0,02
HK	ϕ60,77 ± 0,02
HL	$\phi 23{,}90^{+0{,}04}_{-0}$
HM	R220,00
HN	R70,00
HO	50,30
HP	132,71
HQ	80,52
HR	205,85

Maximum cone contour

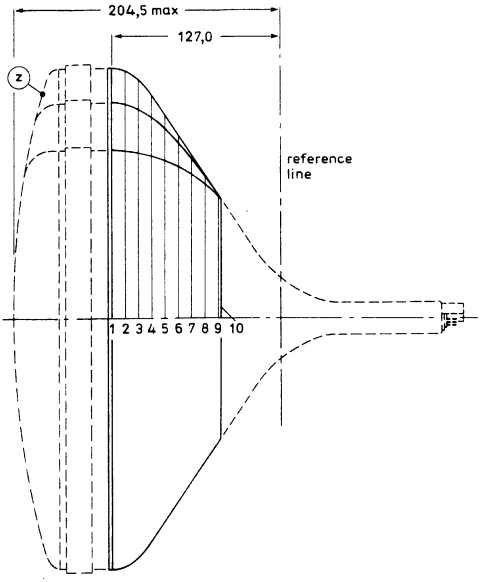

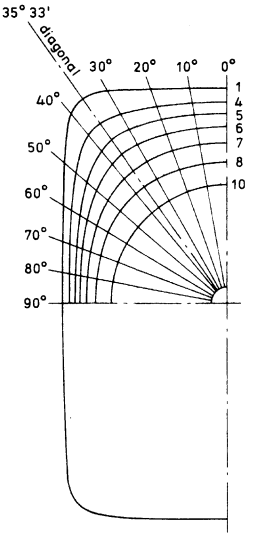

Dimensions in mm

section	nom. distance from reference line	distance from centre (max. values)														
		0°	10°	20°	25°	30°	32° 30'	diag. axes	37° 30'	40°	45°	50°	60°	70°	80°	90°
1	127,0	160,3	162,5	169,4	174,8	181,6	185,2	186,7	186,2	183,8	171,7	160,1	143,3	133,0	127,3	125,5
2	117,0	159,5	161,6	168,3	173,5	180,1	183,5	185,3	184,7	181,8	169,8	158,7	142,5	132,3	126,8	125,0
3	107,0	156,4	158,3	164,2	168,5	173,8	176,4	177,7	177,1	174,5	164,7	155,0	140,1	130,5	125,2	123,5
4	97,0	149,9	151,5	156,0	159,2	162,7	164,2	165,1	164,9	163,5	157,0	149,3	136,1	127,3	122,3	120,7
5	87,0	141,3	142,6	146,2	148,5	150,3	150,8	150,8	150,3	149,2	145,3	140,1	130,0	122,6	118,3	116,9
6	77,0	131,1	132,2	134,5	135,7	136,4	136,5	136,4	136,1	135,4	133,4	130,4	123,4	117,4	113,7	112,4
7	67,0	119,0	119,7	120,9	121,5	121,9	121,9	121,9	121,8	121,5	120,6	119,2	115,3	111,2	108,2	107,1
8	57,0	105,7	105,9	106,5	106,8	107,0	107,0	107,0	107,0	107,0	106,7	106,2	104,7	102,7	100,9	100,0
9	47,0	91,6	91,6	91,7	91,8	91,8	91,8	91,9	91,9	91,9	91,8	91,7	91,5	91,1	90,7	90,5
10	45,0	88,6	88,7	88,7	88,8	88,8	88,8	88,8	88,7	88,7	88,7	88,6	88,5	88,3	88,2	88,1

Base JEDEC B8-288

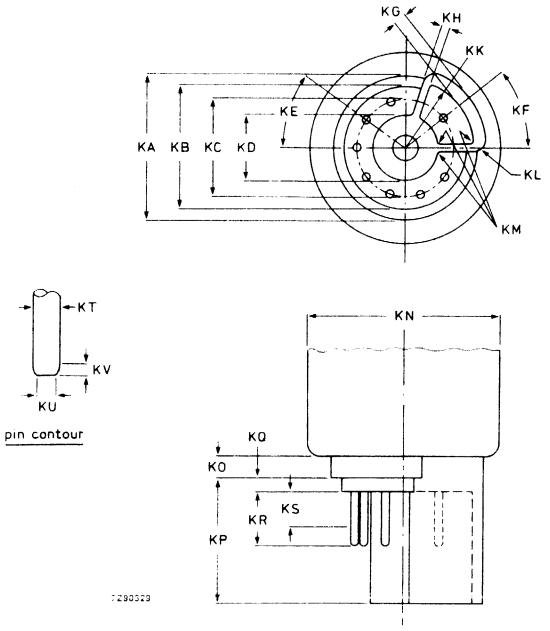

Dimensions in mm

KA	17,9 max
KB	15,4 max
KC	12,0
KD	7,9 min; 8,2 max
KE	36°
KF	38°
KG	1,3 max
KH	0,8 min; 1,0 max
KK	R8,66 ± 0,1
KL	R1,0
KM	R0,25
KN	23,2 max
KO	2,7 max
KP	15,4 ± 0,2
KQ	1,6 max
KR	6.85 max
KS	4,5 min
KT	1,016 ± 0,076
KU	0,63 max
KV	0,4 min

TYPICAL OPERATING CONDITIONS

The voltages are specified with respect to grid 1.

Anode voltage	$V_{a,g4}$	23 kV
Grid 3 (focusing electrode) voltage	V_{g3}	6,7 to 7,6 kV
Grid 2 voltage for a spot cut-off voltage V_k = 120 V	V_{g2}	310 to 650 V
Luminance at the centre of the screen*	L	165 cd/m²

* Tube settings adjusted to produce white of 6500K + 7 M.P.C.D. (x = 0,313, y = 0,329) focused raster, current density 0,4 μA/cm².

EQUIPMENT DESIGN VALUES

The values are valid for anode voltages between 20 and 27,5 kV.
The voltages are specified with respect to grid 1.

Grid 3 (focusing electrode) voltage	V_{g3}	29 to 31% of anode voltage
Grid 2 voltage and cathode voltage for visual extinction of focused spot	V_{g2} and V_k	see cut-off design chart
Difference in cut-off voltages between guns in any tube	ΔV_k	lowest value > 80% of highest value
Video drive characteristics		see graphs*
Grid 3 (focusing electrode) current	I_{g3}	−5 to +5 μA
Grid 2 current	I_{g2}	−5 to +5 μA
Grid 1 current under cut-off conditions	I_{g1}	−5 to +5 μA
To produce white of 6500K + 7 M.P.C.D. (CIE co-ordinates x = 0,313, y = 0,329)		
Percentage of the total anode current supplied by each gun (typical)		
red gun		38,3%
green gun		35,8%
blue gun		25,9%
Ratio of anode currents		
red gun to green gun		min. 0,8 average 1,1 max. 1,4
red gun to blue gun		min. 1,1 average 1,5 max. 1,9
blue gun to green gun		min. 0,5 average 0,7 max. 0,9

* For optimum picture performance it is recommended that the cathodes are not driven below + 10 V.

LIMITING VALUES (Design maximum rating system unless otherwise stated)

The voltages are specified with respect to grid 1.

Anode voltage	$V_{a,g4}$	max.	27,5	kV	notes 1, 2, 3
		min.	20	kV	notes 1 and 4
Long-term average current for three guns	I_a	max.	750	μA	note 5
Grid 3 (focusing electrode) voltage	V_{g3}	max.	11	kV	
Grid 2 voltage, peak	V_{g2p}	max.	1000	V	
Cathode voltage					
positive	V_k	max.	400	V	
positive operating cut-off	V_k	max.	200	V	
negative	$-V_k$	max.	0	V	
negative peak	$-V_{kp}$	max.	2	V	
Heater voltage	V_f	6,3 V	+5 −10	%	notes 1 and 6
Heater-cathode voltage					
heater negative with respect to cathode					
after equipment warm-up period	V_{kf}	max.	200	V	
heater positive with respect to cathode	$-V_{kfp}$	peak	200	V	note 1
	$-V_{kf}$	max. (d.c. component value)	0	V	

Notes

1. Absolute maximum rating system.
2. The X-ray dose rate remains below the acceptable value of 0,5 mR/h, measured with ionization chamber when the tube is used within its limiting values.
3. During adjustment on the production line this value is likely to be surpassed considerably. It is therefore strongly recommended to first make the necessary adjustments for normal operation without picture tube.
4. Operation of the tube at lower voltages impairs the luminance and resolution.
5. The short-term average anode current should be limited by circuitry to 1000 μA.
6. For maximum cathode life and optimum performance, it is recommended that the heater supply be designed for 6,3 V at zero beam current.

FLASHOVER PROTECTION

With the high voltage used with this tube (max. 27,5 kV) internal flashovers may occur. As a result of the Soft-Flash technology these flashover currents are limited to approx. 60 A offering higher set reliability, optimum circuit protection and component savings.

Primary protective circuitry using properly grounded spark gaps and series isolation resistors (preferably carbon composition) is still necessary to prevent tube damage. The spark gaps should be connected to all picture tube electrodes at the socket according to the figure below; they are not required on the heater pins. No other connections between the outer conductive coating and the chassis are permissible. The spark gaps should be designed for a breakdown voltage at the focusing electrode (g3) of 12 kV (1,5 x V_{g3} max. at $V_{a,g4}$ = 25 kV), and at the other electrodes of 1,5 to 2 kV.

The values of the series isolation resistors should be as high as possible (min. 1,5 kΩ) without causing deterioration of the circuit performance. The resistors should be able to withstand an instantaneous surge of 20 kV for the focusing circuit and 12 kV for the remaining circuits without arcing.

Additional information is available on request.

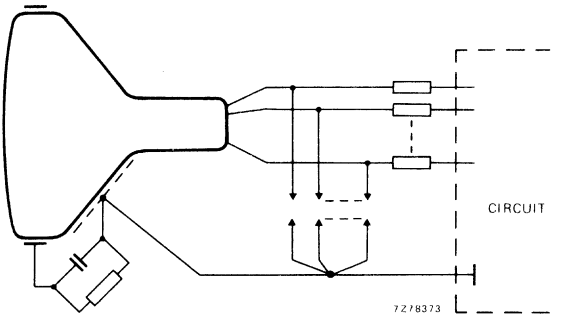

BEAM CORRECTIONS

Maximum required correction for register, as measured at the centre of the screen in any direction	0,08 mm
Centre convergence displacement of the blue and red beams is contained within a circle; max. diameter of circle	4 mm
Centre convergence displacement between the green beam and converged blue and red beams is contained within a circle; maximum diameter of circle	2 mm
Maximum centring error in any direction after colour purity, static convergence, and horizontal centre line correction, measured with deflection coils in nominal position	4 mm

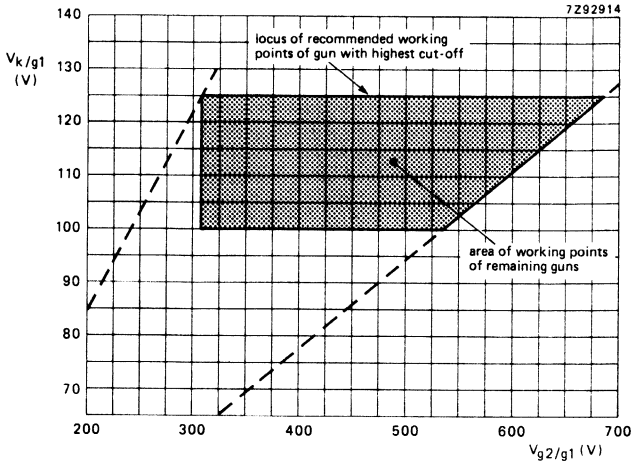

Spot cut-off design chart.

Grid 2 voltage (V_{g2}) adjusted for highest gun spot cut-off voltage V_k = 125 V.

Remaining guns adjusted for spot cut-off by means of cathode voltage

V_{g2} range 310 to 685 V;

V_k range 100 to 125 V.

Adjustment procedure:

Set the cathode voltage (V_k) for each gun at 125 V; increase the grid 2 voltage (V_{g2}) from approx. 300 V to the value at which one of the colours becomes just visible. Now decrease the cathode voltage of the remaining guns so that the other colours also become visible.

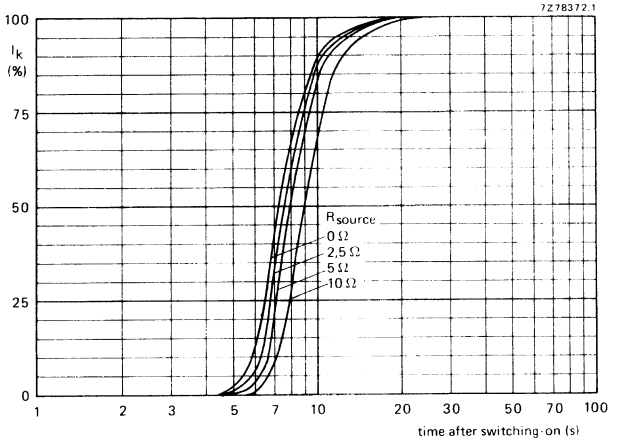

Cathode heating time after switching on, measured under typical operating conditions.

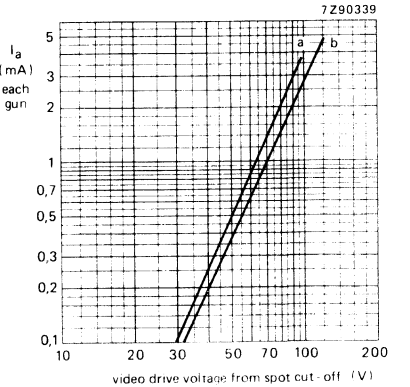

Typical cathode drive characteristics.

V_f = 6,3 V;

$V_{a,g4}$ = 23 kV;

V_{g3} adjusted for focus

V_{g2} (each gun) adjusted to provide spot cut-off for V_k = 100 V (curve a), V_k = 125 V (curve b).

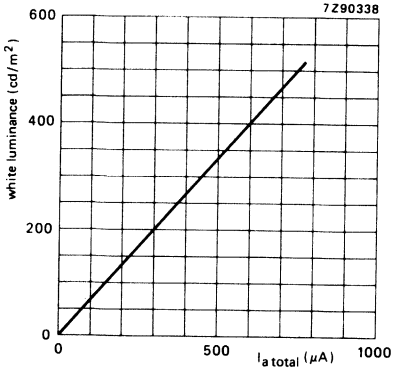

Luminance at the centre of the screen as a function of I_{total}.

$V_{a,g4}$ = 23 kV, V_f = 6,3 V, V_{g3} adjusted for optimum focus.

Scanned area = 280,8 mm x 210,6 mm; CIE co-ordinates x = 0,313, y = 0,329.

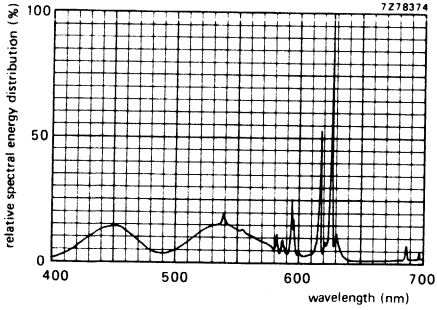

Simultaneous excitation of red, green and blue phosphor, measured in a tube, to produce white of x = 0,313, y = 0,329. Exact shape of the peaks depends on the resolution of the measuring apparatus.

Colour co-ordinates:

	x	y
red	0,635	0,340
green	0,315	0,600
blue	0,150	0,060

DEGAUSSING

The picture tube has an internal magnetic shield. This shield and the shadow mask with its suspension system may be provided with an automatic degaussing system, consisting of one magnetic coil winding mounted on the cone of the picture tube.

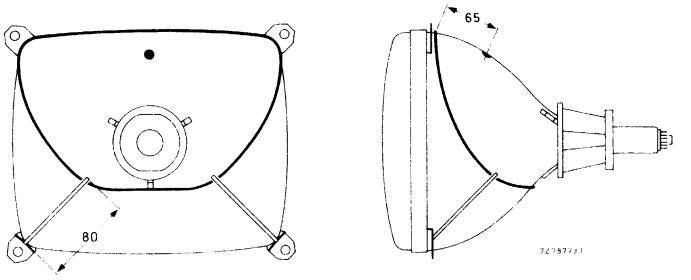

Position of degaussing coil on the picture tube; dimensions are given in mm.

For proper degaussing an initial magnetomotive force (m.m.f.) of 600 ampere-turns is required in the coil. This m.m.f. has to be gradually decreased by appropriate degaussing circuitry. In the steady state, no significant m.m.f. should remain in the coil ($\leqslant$ 0,6 ampere-turns). If single-phase power rectification is employed in the t.v. circuitry, provision should be included to prevent asymmetric distortion of the a.c. voltage applied to the degaussing circuit due to high d.c. inrush currents. An example of a degaussing circuit and coil data for various mains voltages are given below.

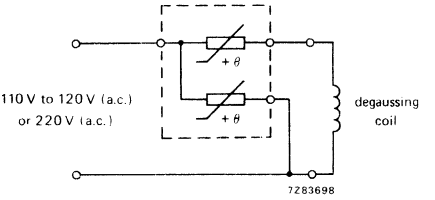

Degaussing circuit using dual PTC thermistor.

Data of degaussing coil

	110 V (a.c.) mains	220 V (a.c.) mains
Circumference	90 cm	90 cm
Number of turns	60	120
Copper wire diameter	0,45 mm	0,3 mm
Resistance	6 Ω	27 Ω
Catalogue number of appropriate dual PTC thermistor	2322 662 98013	2322 662 98009

DEFLECTION UNIT

QUICK REFERENCE DATA

Picture tube	
gun arrangement	in line
minimum useful screen diagonal	34 cm
neck diameter	22,5 mm
Deflection angle	90°
Line deflection current, edge to edge at 23 kV	2,15 A (p-p)
Inductance of line coils, parallel connected (including additional coil)	2,46 mH
Field deflection current, edge to edge at 23 kV	0,38 A (p-p)
Resistance of field coils, series connected	54,4 Ω

APPLICATION

This deflection unit, in conjunction with devices for colour purity and static convergence is for 90° in-line colour picture tube A34EAC00X, with a neck diameter of 22,5 mm. The unit requires no raster correction circuitry.

DESCRIPTION

The deflection unit consists of saddle-shaped line deflection coils and toroidal wound field deflection coils, thus forming a hybrid yoke. The unit has a metal non-magnetic clamping ring at the rear, to fix the deflection unit on the neck of the picture tube. With the deflection unit positioned axially for optimum purity, a clearance is available at the front which permits adjustment of convergence by tilting the unit in the vertical and/or horizontal plane. Wedges are recommended to secure the deflection unit in the chosen position.

MECHANICAL DATA

Dimensions in mm

Outlines

The deflection unit fits a tube with a neck diameter of $22{,}5^{+1{,}4}_{-0{,}7}$ mm.

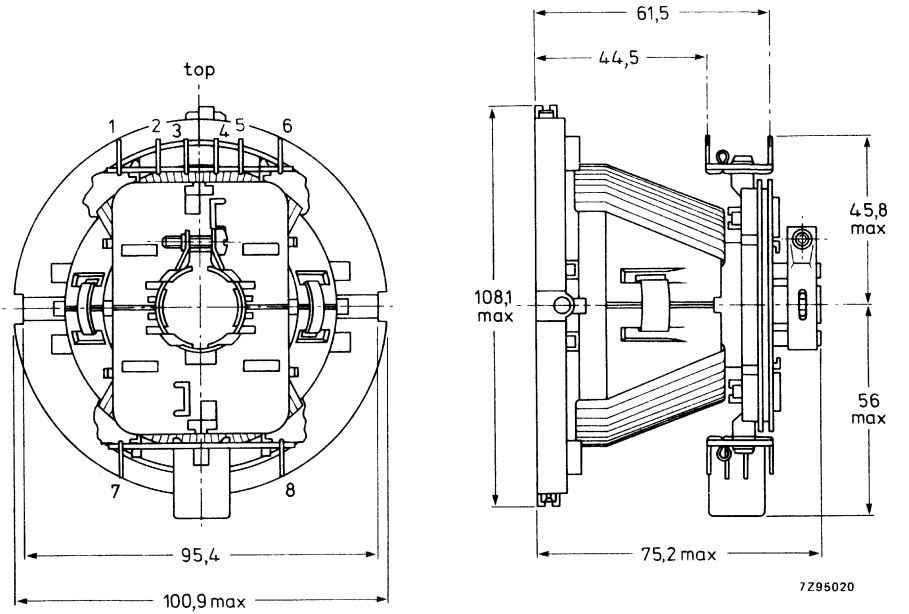

Fig. 1.

Maximum operating temperature (average copper temperature measured with resistance method)	+ 90 °C
Storage temperature range	−25 to + 90 °C
Flame retardent	according to UL 1413, category 94-V1
Torque on neck clamp screw	1,0 Nm

ENVIRONMENTAL TEST SPECIFICATIONS

Vibration	IEC 68-2-6 (test Fc)
Shock	IEC 68-2-27 (test Ea)
Bump	IEC 68-2-29 (test Eb; 25g)
Cold	IEC 68-2-1 (test Ab)
Dry heat	IEC 68-2-2 (test Bb)
Damp heat, steady state	IEC 68-2-3 (test Ca)
Cyclic damp heat	IEC 68-2-30 (test Db)
Change of temperature	IEC 68-2-14 (test Nb)

ELECTRICAL DATA

Line coils, including additional coil	
Inductance at 1 V (r.m.s.), 1 kHz	2,46 mH ± 4%
Resistance at 25 °C	3,2 Ω ± 10%
Magnetic flux at 23 kV	5,29 mWb ± 2,5%
Line deflection current, edge to edge, at 23 kV	2,15 A (p-p)
Additional coil	
Inductance at 1 V (r.m.s.), 1 kHz	0,15 mH ± 4%
Field coils	
Inductance at 1 V (r.m.s.), 1 kHz	110 mH ± 10%
Resistance at 25 °C	54,4 Ω ± 7%
Field deflection current, edge to edge, at 23 kV	0,38 A (p-p)
Cross talk	a voltage of 10 V, 15625 Hz applied to the line coils causes no more than 0,40 V across the field coils (damping resistors included)
Insulation resistance at 1 kV (d.c.)	
between line and field coils	> 500 MΩ
between line coil and core clamp	> 500 MΩ
between field coil and core clamp	> 10 MΩ

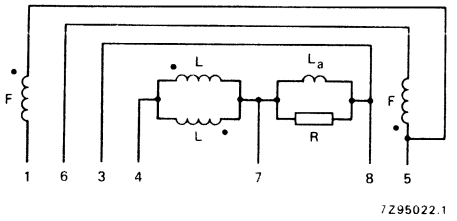

Fig. 2 Connection diagram. L = line coils; F = field coils; L_a = additional coil; R = 4,7 kΩ.

ADJUSTMENT

- Adjust the static convergence with the four and six-pole magnets of the multipole unit AT1301 for the relative movement of the beams under influence of a four or six-pole magnet.
- Adjust colour purity by axial movement of the deflection unit and adjustment of the two-pole magnets for centring of the beams.
- Tighten the screw of the clamping ring on the deflection unit to secure the axial position of the unit on the picture tube.
- Readjust, if necessary, the convergence with the four and six-pole magnets.
- Tilt the unit in either horizontal or vertical direction, or in both directions so that blue, green and red lines converge at the end of the horizontal and vertical axis.
- This position of the unit has to be secured by three rubber wedges placed between the picture tube and the deflection unit. These wedges have to be cemented on to the picture tube.

DEFLECTION UNIT

QUICK REFERENCE DATA

Picture tube	
gun arrangement	in line
minimum useful screen diagonal	34 cm
neck diameter	22,5 mm
Deflection angle	90°
Line deflection current, edge to edge at 23 kV	2,15 A (p-p)
Inductance of line coils, parallel connected (including additional coil)	2,50 mH
Field deflection current, edge to edge at 23 kV	0,75 A (p-p)
Resistance of field coils, parallel connected	13,6 Ω

APPLICATION

This deflection unit, in conjunction with devices for colour purity and static convergence is for 90° in-line colour picture tube A34EAC00X, with a neck diameter of 22,5 mm. The unit requires no raster correction circuitry.

DESCRIPTION

The deflection unit consists of saddle-shaped line deflection coils and toroidal wound field deflection coils, thus forming a hybrid yoke. The unit has a metal non-magnetic clamping ring at the rear, to fix the deflection unit on the neck of the picture tube. With the deflection unit positioned axially for optimum purity, a clearance is available at the front which permits adjustment of convergence by tilting the unit in the vertical and/or horizontal plane. Wedges are recommended to secure the deflection unit in the chosen position.

MECHANICAL DATA

Dimensions in mm

Outlines

The deflection unit fits a tube with a neck diameter of $22{,}5^{+1{,}4}_{-0{,}7}$ mm.

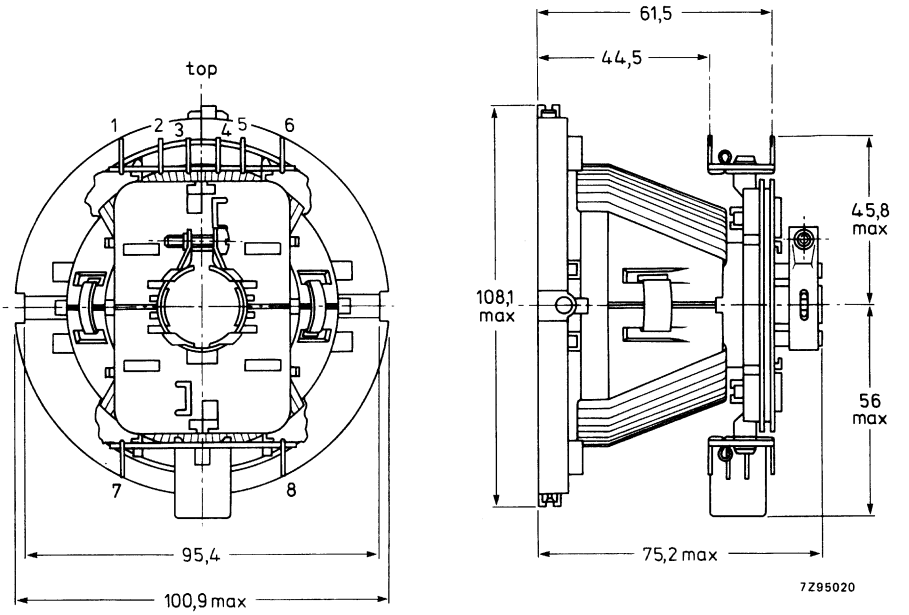

Fig. 1.

Maximum operating temperature (average copper temperature measured with resistance method)	+90 °C
Storage temperature range	−25 to +90 °C
Flame retardent	according to UL 1413, category 94-V1
Torque on neck clamp screw	1,0 Nm

ENVIRONMENTAL TEST SPECIFICATIONS

Vibration	IEC 68-2-6 (test Fc)
Shock	IEC 68-2-27 (test Ea)
Bump	IEC 68-2-29 (test Eb; 25g)
Cold	IEC 68-2-1 (test Ab)
Dry heat	IEC 68-2-2 (test Bb)
Damp heat, steady state	IEC 68-2-3 (test Ca)
Cyclic damp heat	IEC 68-2-30 (test Db)
Change of temperature	IEC 68-2-14 (test Nb)

ELECTRICAL DATA

Line coils, including additional coil	
Inductance at 1 V (r.m.s.), 1 kHz	2,50 mH ± 4%
Resistance at 25 °C	3,3 Ω ± 10%
Magnetic flux at 23 kV	5,38 mWb ± 2,5%
Line deflection current, edge to edge, at 23 kV	2,15 A (p-p)
Additional coil	
Inductance at 1 V (r.m.s.), 1 kHz	0,19 mH ± 4%
Field coils	
Inductance at 1 V (r.m.s.), 1 kHz	27,5 mH ± 10%
Resistance at 25 °C	13,6 Ω ± 7%
Field deflection current, edge to edge, at 23 kV	0,75 A (p-p)
Cross talk	a voltage of 10 V, 15625 Hz applied to the line coils causes no more than 0,20 V across the field coils (damping resistors included)
Insulation resistance at 1 kV (d.c.)	
between line and field coils	> 500 MΩ
between line coil and core clamp	> 500 MΩ
between field coil and core clamp	> 10 MΩ

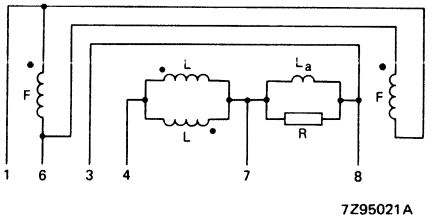

Fig. 2 Connection diagram. L = line coils; F = field coils; L_a = additional coil; R = 4,7 kΩ.

ADJUSTMENT

- Adjust the static convergence with the four and six-pole magnets of the multipole unit AT1301 for the relative movement of the beams under influence of a four or six-pole magnet.
- Adjust colour purity by axial movement of the deflection unit and adjustment of the two-pole magnets for centring of the beams.
- Tighten the screw of the clamping ring on the deflection unit to secure the axial position of the unit on the picture tube.
- Readjust, if necessary, the convergence with the four and six-pole magnets.
- Tilt the unit in either horizontal of vertical direction, or in both directions so that blue, green and red lines converge at the end of the horizontal and vertical axis.
- This position of the unit has to be secured by three rubber wedges placed between the picture tube and the deflection unit. These wedges have to be cemented on to the picture tube.

DEFLECTION UNIT

QUICK REFERENCE DATA

Picture tube	
gun arrangement	in line
minimum useful screen diagonal	34 cm
neck diameter	22,5 mm
Deflection angle	90°
Line deflection current, edge to edge at 23 kV	2,07 A (p-p)
Inductance of line coils, parallel connected	2,50 mH
Field deflection current, edge to edge at 23 kV	0,38 A (p-p)
Resistance of field coils, series connected	54,4 Ω

APPLICATION

This deflection unit, in conjunction with devices for colour purity and static convergence is for 90° in-line colour picture tube A34EAC00X, with a neck diameter of 22,5 mm. The unit requires no raster correction circuitry.

DESCRIPTION

The deflection unit consists of saddle-shaped line deflection coils and toroidal wound field deflection coils, thus forming a hybrid yoke. The unit has a metal non-magnetic clamping ring at the rear, to fix the deflection unit on the neck of the picture tube. With the deflection unit positioned axially for optimum purity, a clearance is available at the front which permits adjustment of convergence by tilting the unit in the vertical and/or horizontal plane. Wedges are recommended to secure the deflection unit in the chosen position.

MECHANICAL DATA

Dimensions in mm

Outlines

The deflection unit fits a tube with a neck diameter of $22{,}5^{+1{,}4}_{-0{,}7}$ mm.

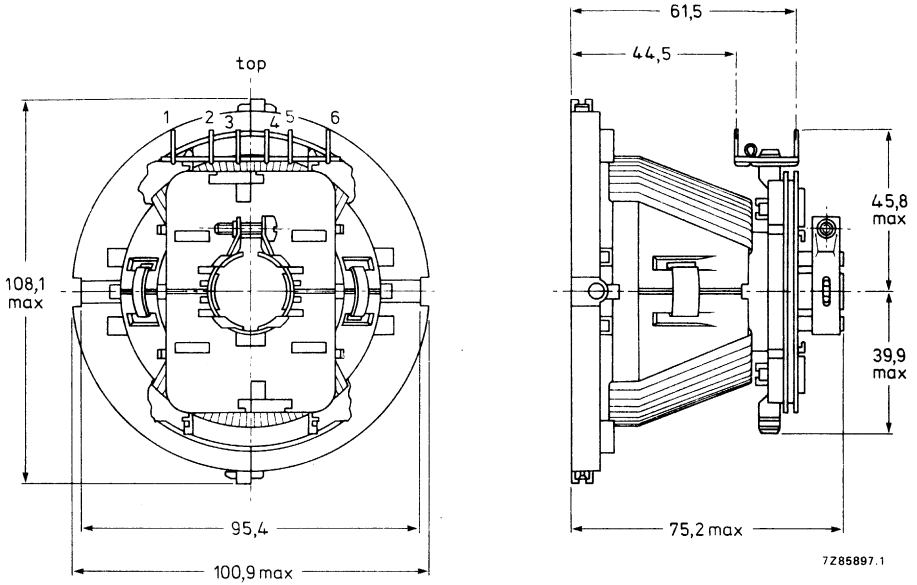

Fig. 1.

Maximum operating temperature (average copper temperature measured with resistance method)	+ 90 °C
Storage temperature range	−25 to + 90 °C
Flame retardent	according to UL 1413, category 94-V1
Torque on neck clamp screw	1,0 Nm

ENVIRONMENTAL TEST SPECIFICATIONS

Vibration	IEC 68-2-6 (test Fc)
Shock	IEC 68-2-27 (test Ea)
Bump	IEC 68-2-29 (test Eb; 25g)
Cold	IEC 68-2-1 (test Ab)
Dry heat	IEC 68-2-2 (test Bb)
Damp heat, steady state	IEC 68-2-3 (test Ca)
Cyclic damp heat	IEC 68-2-30 (test Db)
Change of temperature	IEC 68-2-14 (test Nb)

ELECTRICAL DATA

Line coils	
Inductance at 1 V (r.m.s.), 1 kHz	2,50 mH ± 4%
Resistance at 25 °C	3,3 Ω ± 10%
Magnetic flux at 23 kV	5,18 mWb ± 2,5%
Line deflection current, edge to edge, at 23 kV	2,07 A (p-p)
Field coils	
Inductance at 1 V (r.m.s.), 1 kHz	110 mH ± 10%
Resistance at 25 °C	54,4 Ω ± 7%
Field deflection current, edge to edge, at 23 kV	0,38 A (p-p)
Cross talk	a voltage of 10 V, 15625 Hz applied to the line coils causes no more than 0,4 V across the field coils (damping resistors included)
Insulation resistance at 1 kV (d.c.)	
between line and field coils	> 500 MΩ
between line coil and core clamp	> 500 MΩ
between field coil and core clamp	> 10 MΩ

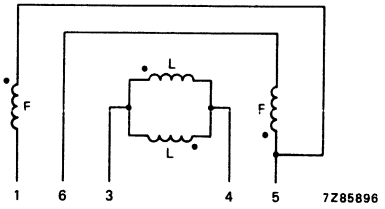

Fig. 2 Connection diagram, L = Line, F = Field.

ADJUSTMENT

- Adjust the static convergence with the four and six-pole magnets of the multipole unit AT1301 for the relative movement of the beams under influence of a four or six-pole magnet.
- Adjust colour purity by axial movement of the deflection unit and adjustment of the two-pole magnets for centring of the beams.
- Tighten the screw of the clamping ring on the deflection unit to secure the axial position of the unit on the picture tube.
- Readjust, if necessary, the convergence with the four and six-pole magnets.
- Tilt the unit in either horizontal or vertical direction, or in both directions so that blue, green and red lines converge at the end of the horizontal and vertical axis.
- This position of the unit has to be secured by three rubber wedges placed between the picture tube and the deflection unit. These wedges have to be cemented on to the picture tube.

DEFLECTION UNIT

QUICK REFERENCE DATA

Picture tube	
gun arrangement	in line
minimum useful screen diagonal	34 cm
neck diameter	22,5 mm
Deflection angle	90°
Line deflection current, edge to edge at 23 kV	2,07 A (p-p)
Inductance of line coils, parallel connected	2,50 mH
Field deflection current, edge to edge at 23 kV	0,75 A (p-p)
Resistance of field coils, parallel connected	13,6 Ω

APPLICATION

This deflection unit, in conjunction with devices for colour purity and static convergence is for 90° in-line colour picture tube A34EAC00X, with a neck diameter of 22,5 mm. The unit requires no raster correction circuitry.

DESCRIPTION

The deflection unit consists of saddle-shaped line deflection coils and toroidal wound field deflection coils, thus forming a hybrid yoke. The unit has a metal non-magnetic clamping ring at the rear, to fix the deflection unit on the neck of the picture tube. With the deflection unit positioned axially for optimum purity, a clearance is available at the front which permits adjustment of convergence by tilting the unit in the vertical and/or horizontal plane. Wedges are recommended to secure the deflection unit in the chosen position.

MECHANICAL DATA

Dimensions in mm

Outlines

The deflection unit fits a tube with a neck diameter of $22{,}5^{+1{,}4}_{-0{,}7}$ mm.

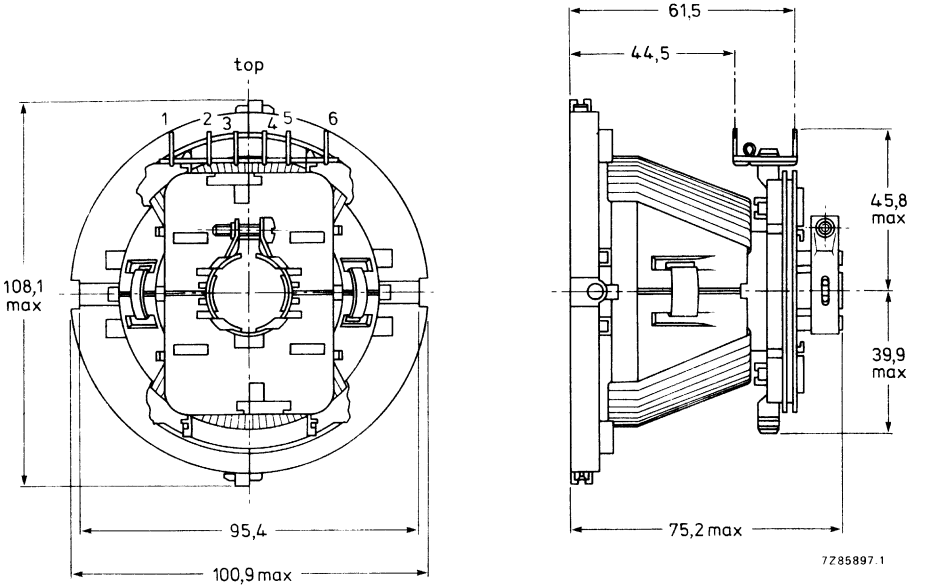

Fig. 1.

Maximum operating temperature (average copper temperature measured with resistance method)	+90 °C
Storage temperature range	−25 to +90 °C
Flame retardent	according to UL 1413, category 94-V1
Torque on neck clamp screw	1,0 Nm

ENVIRONMENTAL TEST SPECIFICATIONS

Vibration	IEC 68-2-6 (test Fc)
Shock	IEC 68-2-27 (test Ea)
Bump	IEC 68-2-29 (test Eb; 25g)
Cold	IEC 68-2-1 (Ab)
Dry heat	IEC 68-2-2 (test Bb)
Damp heat, steady state	IEC 68-2-3 (test Ca)
Cyclic damp heat	IEC 68-2-30 (test Db)
Change of temperature	IEC 68-2-14 (test Nb)

ELECTRICAL DATA

Line coils	
Inductance at 1 V (r.m.s.), 1 kHz	2,50 mH ± 4%
Resistance at 25 °C	3,3 Ω ± 10%
Magnetic flux at 23 kV	5,18 mWb ± 2,5%
Line deflection current, edge to edge, at 23 kV	2,07 A (p-p)
Field coils	
Inductance at 1 V (r.m.s.), 1 kHz	27,5 mH ± 10%
Resistance at 25 °C	13,6 Ω ± 7%
Field deflection current, edge to edge, at 23 kV	0,75 A(p-p)
Cross talk	a voltage of 10 V, 15625 Hz applied to the line coils causes no more than 0,2 V across the field coils (damping resistors included)
Insulation resistance at 1 kV (d.c.)	
between line and field coils	> 500 MΩ
between line coil and core clamp	> 500 MΩ
between field coil and core clamp	> 10 MΩ

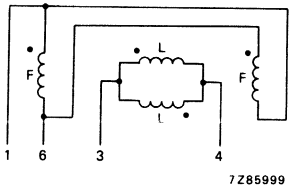

Fig. 2 Connection diagram, L = Line, F = Field.

ADJUSTMENT

- Adjust the static convergence with the four and six-pole magnets of the multipole unit AT1301 for the relative movement of the beams under influence of a four or six-pole magnet.
- Adjust colour purity by axial movement of the deflection unit and adjustment of the two-pole magnets for centring of the beams.
- Tighten the screw of the clamping ring on the deflection unit to secure the axial position of the unit on the picture tube.
- Readjust, if necessary, the convergence with the four and six-pole magnets.
- Tilt the unit in either horizontal or vertical direction, or in both directions so that blue, green and red lines converge at the end of the horizontal and vertical axis.
- This position of the unit has to be secured by three rubber wedges placed between the picture tube and the deflection unit. These wedges have to be cemented on to the picture tube.

FLAT SQUARE Hi-Bri COLOUR PICTURE TUBE

- Flat and square screen
- 90° deflection
- In-line, hi-bi potential A R T* gun
- 22,5 mm neck diameter
- Shadow mask of NiFe alloy with low thermal expansion
- Hi-Bri technology
- Mask with corner suspension
- Pigmented phosphors
- Fine pitch over entire screen
- Quick-heating low-power cathodes
- Soft flash
- Slotted shadow mask optimized for minimum moiré at 625 lines system
- Internal magnetic shield
- Internal multipole
- Reinforced envelope for push-through mounting
- The tube is supplied with a deflection unit of the AT6060 series; it forms a self-converging and raster correction free assembly

QUICK REFERENCE DATA

Deflection angle	90°
Minimum useful screen diagonal	36 cm
Overall length	340 mm
Neck diameter	22,5 mm
Heating	6,3 V, 300 mA
Focusing voltage	31% of anode voltage

* Aberration Reducing Triode.

ELECTRON-OPTICAL DATA

Electron gun system		unitized triple-aperture electrodes; aberration reducing triode
Focusing method		electrostatic
Focus lens		hi-bi-potential
Deflection method		magnetic
Deflection angles		
diagonal		approx. 90°
horizontal		approx. 78°
vertical		approx. 60°

ELECTRICAL DATA

Capacitances		
anode to external conductive coating including rimband	$C_{a(m+m')}$	max. 1600 pF min. 800 pF
grid 1 to all other electrodes	C_{g1}	15 pF
cathode of each gun to all other electrodes	C_{kR}, C_{kG}, C_{kB}	4 pF
focusing electrode to all other electrodes	C_{g3}	4 pF
Heating		indirect by a.c. or d.c.
heater voltage	V_f	6,3 V
heater current	I_f	300 mA

OPTICAL DATA

Screen		metal-backed vertical phosphor stripes; phosphor lines follow glass contour
Screen finish		high polish
Useful screen dimensions		
diagonal		min. 355,6 mm
horizontal axis		min. 284,5 mm
vertical axis		min. 213,4 mm
area		min. 607 cm^2
Positional accuracy of the screen with respect to the glass contour		see Figures on the next page
Phosphors		
red		pigmented europium activated rare earth
green		sulphide type
blue		pigmented sulphide type
Centre-to-centre distance of vertical identical colour phosphor stripes, at screen centre		0,52 mm
Light transmission of face glass at centre		65%
Luminance at the centre of the screen	L	140 cd/m^2 *

* Tube settings adjusted to produce white D (x = 0,313, y = 0,329), focused raster, current density 0,4 $\mu A/cm^2$.

A = 121,70 mm
B = 161,20 mm
C = 87,50 mm
D = 126,73 mm
E = 26,83 mm

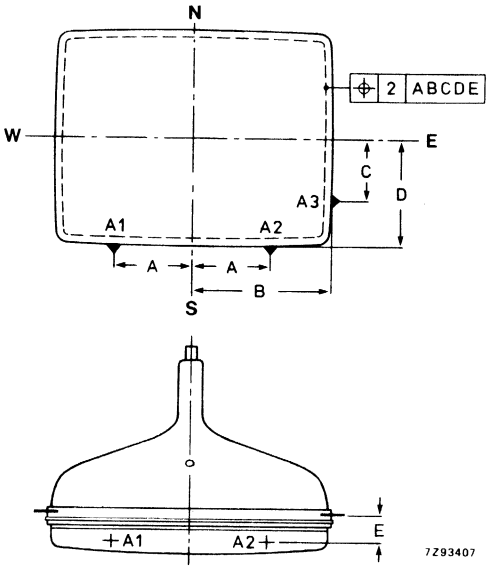

DEVELOPMENT DATA

MECHANICAL DATA (see also the figures on the following pages)

Overall length	340 ± 4,5 mm
Neck diameter	$22{,}5\ ^{+\ 1{,}4}_{-0{,}7}$ mm*
Bulb dimensions	
diagonal	max. 392,6 mm
width	max. 328,4 mm
height	max. 263,0 mm
Base	JEDEC B8-288
Anode contact	small cavity contact J1-21, IEC 67-III-2
Mounting position	anode contact on top
Net mass	approx. 7 kg

Handling

During shipment and handling the tube should not be subjected to accelerations greater than 35g in any direction.

* In the region of 66 mm from the neck end, the maximum diameter is 23,2 mm.

MECHANICAL DATA (continued)

Notes are given after the drawings.

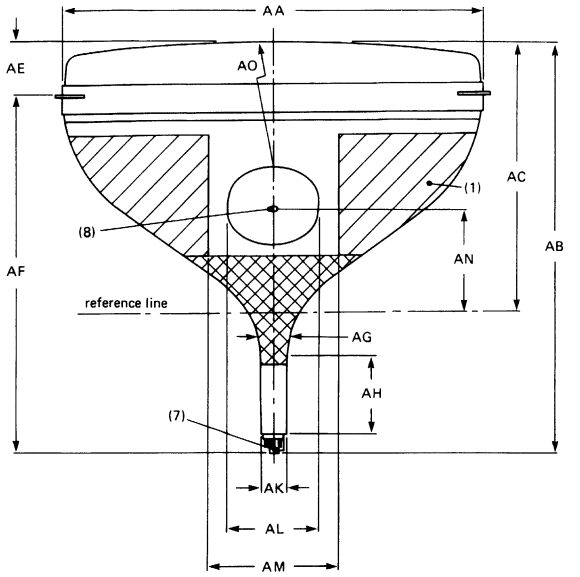

Dimensions in mm

AA	332 max
AB	340 ± 4,5
AC	204 ± 4
AE	51,5 max
AF	297 max
AG	$22{,}5\ ^{+1{,}4}_{-0{,}7}$
AH	66
AK	22,9 ± 0,3
AL	110 ± 10
AM	140 ± 3
AN	75 ± 3,2
AO	R1200 approx

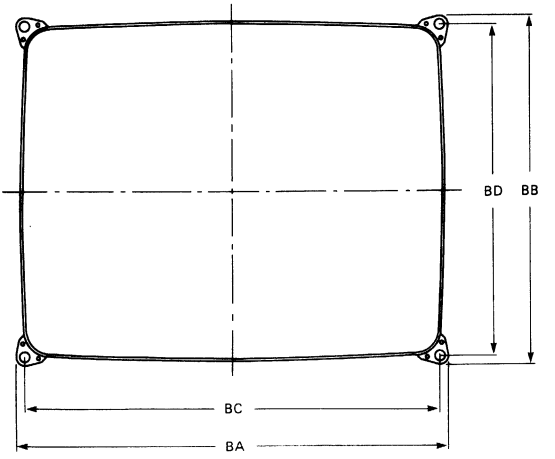

Dimensions in mm

BA	346,5 max
BB	281 max
BC	326,4
BD	261

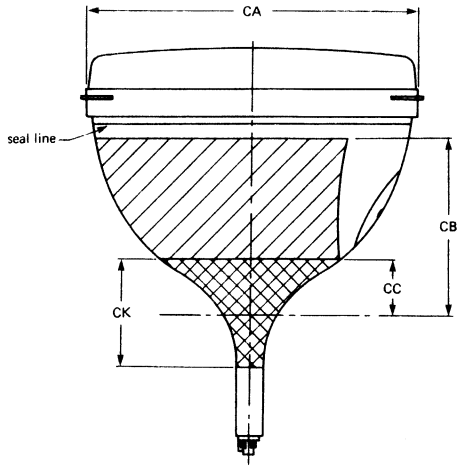

Dimensions in mm

CA	267 max
CB	122,5 min
CC	49 max
CG	396,5
CK	53 max

DEVELOPMENT DATA

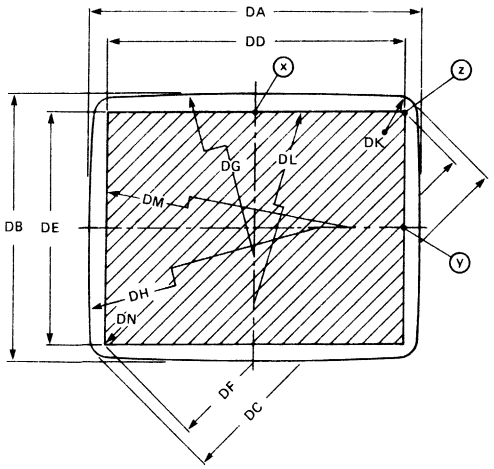

Dimensions in mm

DA	326,8 ± 1,6
DB	261,4 ± 1,6
DC	391 ± 1,6
DD	284,5 min
DE	213,4 min
DF	355,6 min
DG	R2028
DH	R2029
DK	R21,4
DL	R10078
DM	R5661
DN	R0

MECHANICAL DATA (continued)

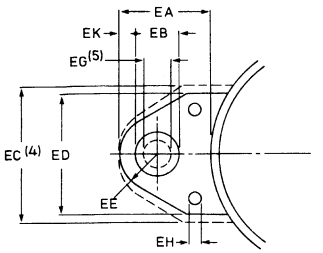

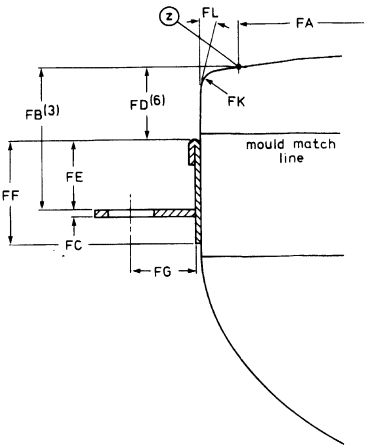

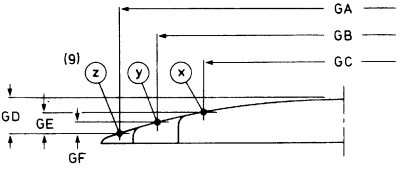

Dimensions in mm

EA	20,6 ± 0,5
EB	11,5 ± 0,2
EC	35 max
ED	30 ± 1
EE	R8
EG	8
EH	3 min
EK	2,25 ± 0,3

Dimensions in mm

GA	355,6
GB	284,5
GC	213,4
GD	13,25 ± 2
GE	8,5 ± 2
GF	4,79 ± 2

Dimensions in mm

FA	355,6
FB	34,5 ± 1,5
FC	2,5
FD	17,5 min
FE	15 max
FF	24 max
FG	13,1
FK	R8
FL	5°

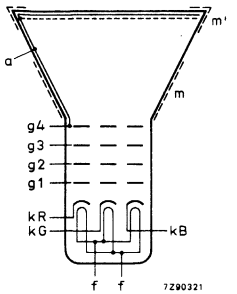

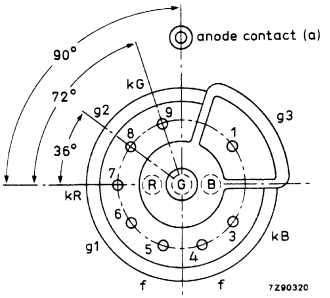

Notes to outline drawings on the preceding pages

1. Configuration of outer conductive coating may be different, but will contain the contact areas as shown in the drawing.
2. To clean this area, wipe only with a soft lintless cloth.
3. One of the four mounting lugs may deviate (1,5 mm max.) from the plane of the other three lugs. This deviation is incorporated in the tolerance of ± 1,5 mm.
4. Minimum space to be reserved for mounting lug.
5. The position of the mounting screw in the cabinet must be within a circle of 8 mm diameter drawn around the true geometrical positions, i.e. corners of a rectangle of 326,4 mm x 261 mm.
6. Distance from point Z to any hardware.
7. The socket for this base should not be rigidly mounted; it should have flexible leads and be allowed to move freely. After mounting of the tube in the cabinet note that the position of the base can fall within a circle, having a diameter of max. 50 mm, concentric with an imaginary tube axis.
8. Small cavity contact J1-21, IEC 67-III-2.
9. The X, Y and Z reference points are located on the outside surface of the face plate at the intersection of the minor, major and diagonal screen axis respectively, with the minimum published screen.

Sagittal heights with reference to screen centre at the edge of the minimum useful screen

coordinates x mm	y mm	sagittal height mm
0*	106,70	4,75
10	106,70	4,79
20	106,70	4,92
30	106,70	5,13
40	106,70	5,42
50	106,70	5,80
60	106,70	6,26
70	106,70	6,80
80	106,70	7,43
90	106,70	8,15
100	106,70	8,94
110	106,70	9,83
120	106,70	10,79
130	106,70	11,84
140	106,70	12,98
142,25**	106,70	13,25
142,25	100	12,66
142,25	90	11,86
142,25	80	11,15
142,25	70	10,52
142,25	60	9,97
142,25	50	9,51
142,25	40	9,13
142,25	30	8,84
142,25	20	8,63
142,25	10	8,50
142,25▲	0	8,46

* Point ⊗
** Diagonal
▲ Point Ⓥ

DEVELOPMENT DATA

Base JEDEC B8-288

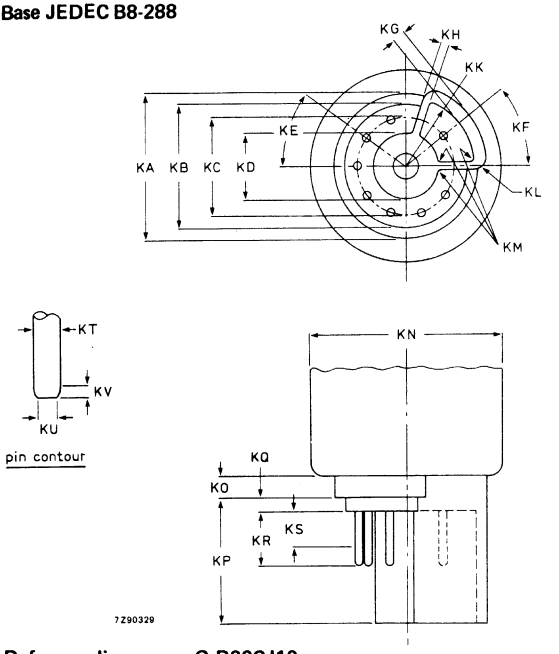

Dimensions in mm

KA	17,9 mm
KB	15,4 max
KC	12,0
KD	7,9 min; 8,2
KE	36°
KF	38°
KG	1,3 max
KH	0,8 min; 1,0 max
KK	R8,66 ± 0,1
KL	R1,0
KM	R0,25
KN	23,2 max
KO	2,7 max
KP	15,4 ± 0,2
KQ	1,6 max
KR	6,85 max
KS	4,5 min
KT	1,016 ± 0,076
KU	0,63 max
KV	0,4 min

Reference line gauge; G-R90CJ10

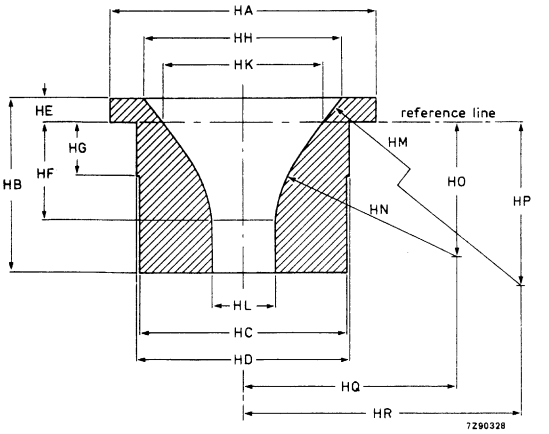

Dimensions in mm

HA	ϕ 100,00
HB	65,00
HC	ϕ 78,70
HD	ϕ 80,00
HE	9,20 ± 0,02
HF	36,22 ± 0,02
HG	20,00
HH	ϕ 75,48 ± 0,02
HK	ϕ 60,77 ± 0,02
HL	ϕ 23,90 $^{+0,04}_{-0}$
HM	R220,00
HN	R70,00
HO	50,30
HP	132,71
HQ	80,52
HR	205,85

DEVELOPMENT DATA

Maximum cone contour

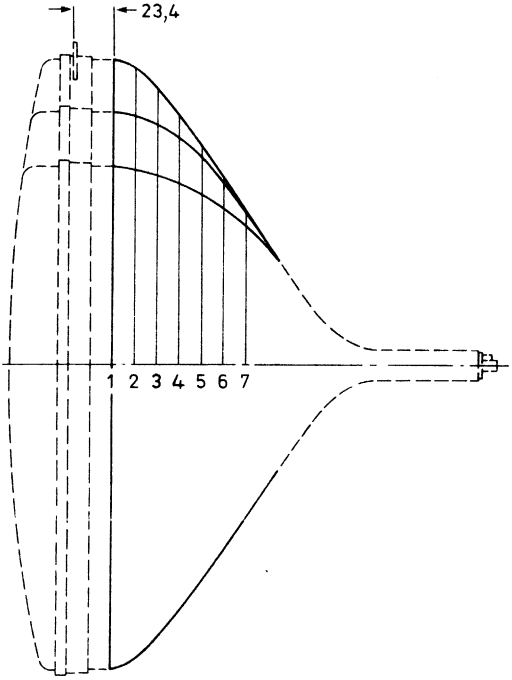

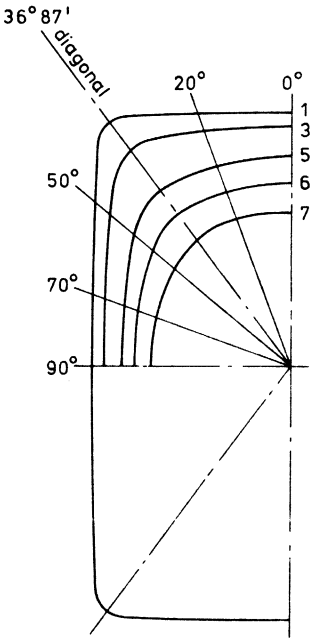

section	nom. distance from section 1	distance from centre (max. values)					
		0°	20°	diag.	50°	70°	90°
1	0	163,3	173,0	195,8	166,9	138,2	130,3
2	20	159,1	168,5	188,0	161,1	134,5	127,2
3	40	149,2	154,4	165,5	148,2	127,5	121,5
4	60	133,5	136,4	140,0	131,2	117,4	113,0
5	80	110,7	111,9	112,6	108,7	102,3	100,0
6	100	82,2	82,7	82,7	82,0	80,8	80,2
7	115	58,3	58,3	58,3	58,3	58,5	58,7

TYPICAL OPERATING CONDITIONS

The voltages are specified with respect to grid 1.

Anode voltage	$V_{a,g4}$	23 kV
Grid 3 (focusing electrode) voltage	V_{g3}	6,7 to 7,6 kV
Grid 2 voltage for a spot cut-off voltage V_k = 120 V	V_{g2}	310 to 650 V

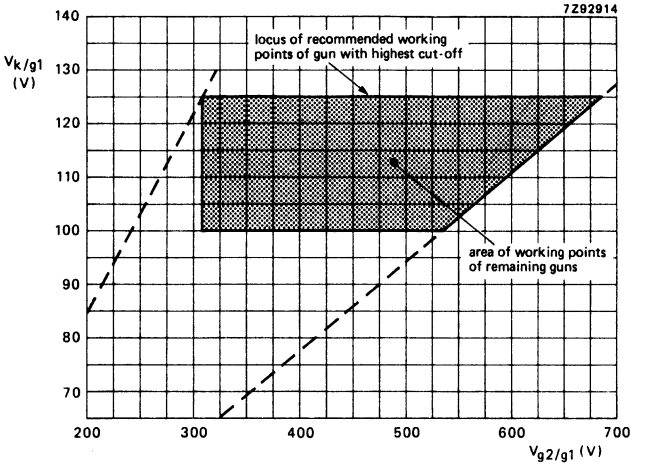

Spot cut-off design chart.

Grid 2 voltage (V_{g2}) adjusted for highest gun spot cut-off voltage V_k = 125 V.

Remaining guns adjusted for spot cut-off by means of cathode voltage

V_{g2} range 310 to 685 V;

V_k range 100 to 125 V.

Adjustment procedure:

Set the cathode voltage (V_k) for each gun at 125 V; increase the grid 2 voltage (V_{g2}) from approx. 300 V to the value at which one of the colours become just visible. Now decrease the cathode voltage of the remaining guns so that the other colours also become visible.

EQUIPMENT DESIGN VALUES

The values are valid for anode voltages between 20 and 27,5 kV.
The voltages are specified with respect to grid 1.

Grid 3 (focusing electrode) voltage	V_{g3}	29 to 33% of anode voltage
Grid 2 voltage and cathode voltage for visual extinction of focused spot	V_{g2} and V_k	see cut-off design chart
Difference in cut-off voltages between guns in any tube	ΔV_k	lowest value > 80% of highest value
Heater voltage	V_f	6,3 V at zero beam current
Video drive characteristics		see graphs
Grid 3 (focusing electrode) current	I_{g3}	−2 to + 2 μA
Grid 2 current	I_{g2}	−2 to + 2 μA
Grid 1 current under cut-off conditions	I_{g1}	−2 to + 2 μA

To produce white of 6500K + 7 M.P.C.D.
(CIE co-ordinates x = 0,313, y = 0,329)

Percentage of the total anode current supplied by each gun (typical)

red gun		38,3%
green gun		35,8%
blue gun		25,9%

Ratio of anode currents

red gun to green gun	min.	0,8
	average	1,1
	max.	1,4
red gun to blue gun	min.	1,1
	average	1,5
	max.	1,9
blue gun to green gun	min.	0,5
	average	0,7
	max.	0,9

DEVELOPMENT DATA

LIMITING VALUES (Design maximum rating system unless otherwise stated)

The voltages are specified with respect to grid 1.

Anode voltage	$V_{a,g4}$	max.	27,5	kV	notes 1, 2, 3
		min.	20	kV	notes 1 and 4
Long-term average current for three guns	I_a	max.	750	μA	note 5
Grid 3 (focusing electrode) voltage	V_{g3}	max.	11	kV	
Grid 2 voltage, peak	V_{g2p}	max.	1000	V	
Cathode voltage					
positive	V_k	max.	400	V	
positive operating cut-off	V_k	max.	200	V	
negative	$-V_k$	max.	0	V	
negative peak	$-V_{kp}$	max.	2	V	
Heater voltage	V_f		6,3 V $^{+5}_{-10}$	%	notes 1 and 6
Heater-cathode voltage					
heater negative with respect to cathode					
after equipment warm-up period	V_{kf}	max.	200	V	
heater positive with respect to cathode	$-V_{kfp}$	peak	200	V	note 1
	$-V_{kf}$	max. (d.c. component value)	0	V	

Notes

1. Absolute maximum rating system.
2. The X-ray dose rate remains below the acceptable value of 0,5 mR/h, measured with ionization chamber when the tube is used within its limiting values.
3. During adjustment on the production line this value is likely to be surpassed considerably. It is therefore strongly recommended to first make the necessary adjustments for normal operation without picture tube.
4. Operation of the tube at lower voltages impairs the luminance and resolution.
5. The short-term average anode current should be limited by circuitry to 1000 μA.
6. For maximum cathode life and optimum performance, it is recommended that the heater supply be designed for 6,3 V at zero beam current.

FLASHOVER PROTECTION

With the high voltage used with this tube (max. 27,5 kV) internal flashovers may occur. As a result of the Soft-Flash technology these flashover currents are limited to approx. 60 A offering higher set reliability, optimum circuit protection and component savings.
Primary protective circuitry using properly grounded spark gaps and series isolation resistors (preferably carbon composition) is still necessary to prevent tube damage. The spark gaps should be connected to all picture tube electrodes at the socket according to the figure below; they are not required on the heater pins. No other connections between the outer conductive coating and the chassis are permissible.
The spark gaps should be designed for a breakdown voltage at the focusing electrode (g3) of 12 kV (1,5 x V_{g3} max. at $V_{a,g4}$ = 25 kV), and at the other electrodes of 1,5 to 2 kV.
The values of the series isolation resistors should be as high as possible (min. 1,5 kΩ) without causing deterioration of the circuit performance. The resistors should be able to withstand an instantaneous surge of 20 kV for the focusing circuit and 12 kV for the remaining circuits without arcing.
Additional information is available on request.

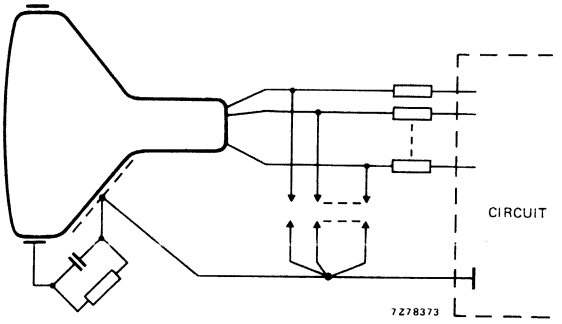

DEVELOPMENT DATA

BEAM CORRECTIONS

Maximum centring error in any direction after colour purity, static convergence, and horizontal centre line correction, measured with deflection coils in nominal position	3 mm

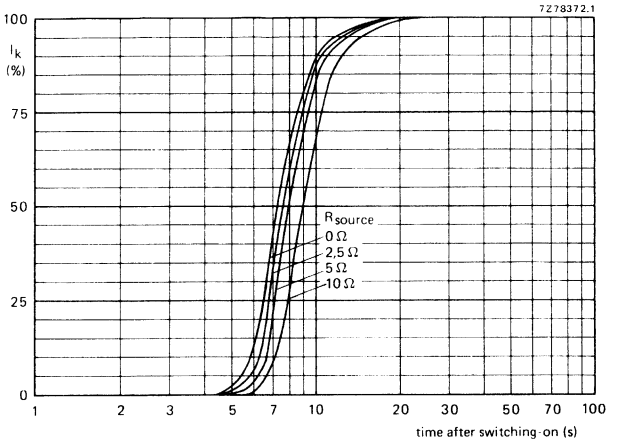

Cathode heating time after switching on, measured under typical operating conditions.

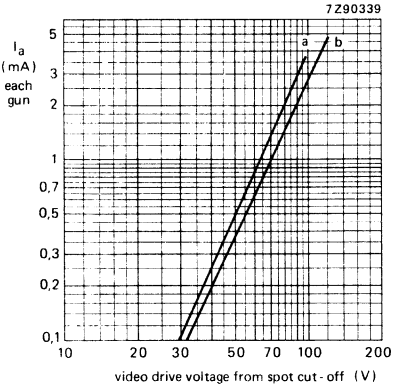

Typical cathode drive characteristics.

V_f = 6,3 V;

$V_{a,g4}$ = 23 kV;

V_{g3} adjusted for focus;

V_{g2} (each gun) adjusted to provide spot cut-off for V_k = 100 V (curve a), and V_k = 125 V (curve b).

For optimum picture performance it is recommended that the cathodes are not driven below + 1 V.

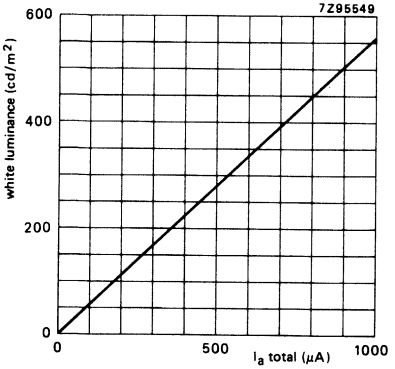

Luminance at the centre of the screen as a function of I_{total}.
$V_{a,g4}$ = 23 kV.
Scanned area = 404,4 mm x 303,3 mm;
CIE co-ordinates x = 0,313, y = 0,329.

DEVELOPMENT DATA

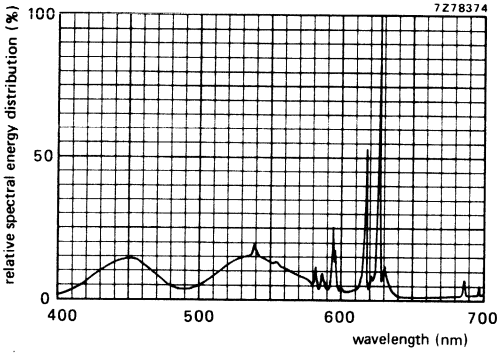

Simultaneous excitation of red, green and blue phosphor, measured in a tube, to produce white of x = 0,313, y = 0,329. Exact shape of the peaks depends on the resolution of the measuring apparatus.

Colour co-ordinates:	x	y
red	0,635	0,340
green	0,315	0,600
blue	0,150	0,060

DEGAUSSING

The picture tube has an internal magnetic shield. This shield and the shadow mask with its suspension system may be provided with an automatic degaussing system, consisting of one magnetic coil winding mounted on the cone of the picture tube.

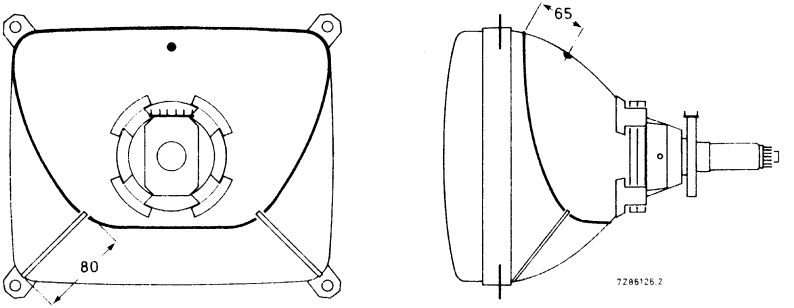

Position of degaussing coil on the picture tube; dimensions are given in mm.

For proper degaussing an initial magnetomotive force (m.m.f.) of 600 ampere-turns is required in the coil. This m.m.f. has to be gradually decreased by appropriate degaussing circuitry. In the steady state, no significant m.m.f. should remain in the coil ($\leqslant$ 0,6 ampere-turns). If single-phase power rectification is employed in the t.v. circuitry, provision should be included to prevent asymmetric distortion of the a.c. voltage applied to the degaussing circuit due to high d.c. inrush currents. An example of a degaussing circuit and coil data for various mains voltages are given below.

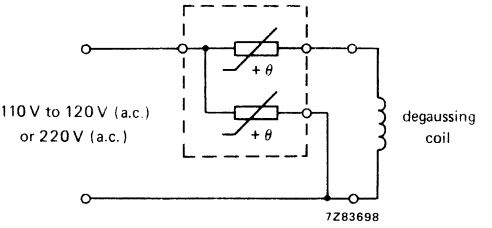

Degaussing circuit using dual PTC thermistor.

Data of degaussing coil

	110 V (a.c.) mains	220 V (a.c.) mains
Circumference	90 cm	90 cm
Number of turns	60	120
Copper wire diameter	0,45 mm	0,3 mm
Resistance	6 Ω	27 Ω
Catalogue number of appropriate dual PTC thermistor	2322 662 98013	2322 662 98009

36 cm, 90° FLAT SQUARE COLOUR PICTURE TUBE ASSEMBLIES

- Factory preset tube/coil assemblies
- Self-converging and raster correction free
- 36 cm, 90° colour picture tube A36EAM . . X
- Hybrid saddle toroidal deflection unit of the AT6060 series

QUICK REFERENCE DATA

Deflection angle	90 °
Minimum useful screen diagonal	36 cm
Overall length	340 mm
Neck diameter	22,5 mm

AVAILABLE ASSEMBLIES

assembly type	assembly components
A36EAM00X01	tube A36EAM00X + deflection unit AT6060/00
A36EAM00X04	tube A36EAM00X + deflection unit AT6060/30
A36EAM00X16	tube A36EAM00X + deflection unit AT6060/42

MECHANICAL DATA

Dimensions in mm

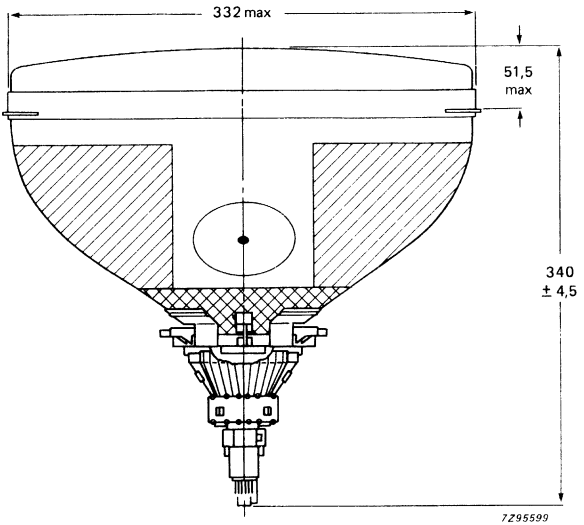

Colour picture tube assembly A36EAM . . X . .

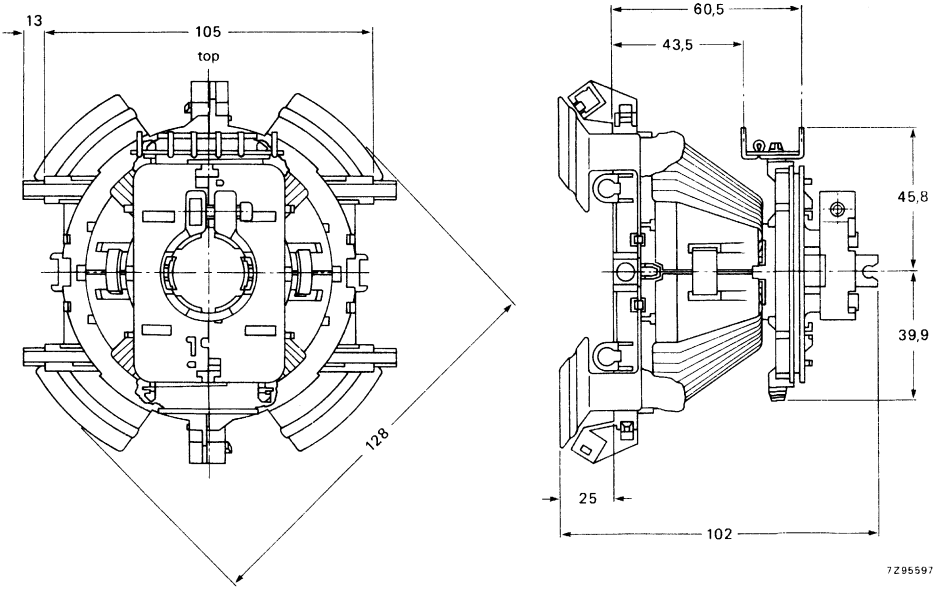

Deflection unit of AT6060 series.

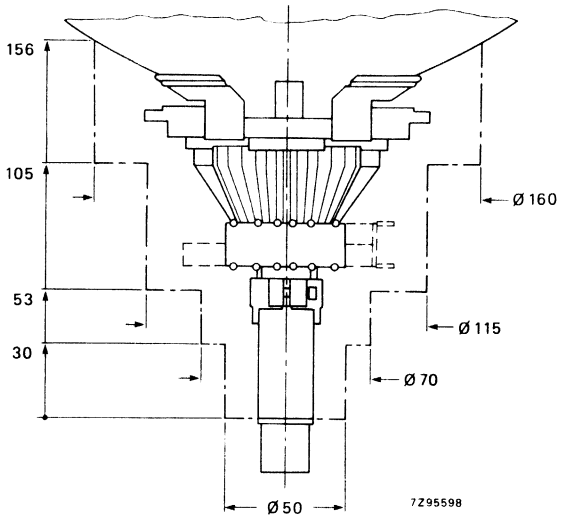

Yoke clearance.

DEVELOPMENT DATA

Maximum operating temperature (average copper temperature measured with resistance method)	+ 90 °C
Storage temperature range	−25 to +90 °C
Flame retardent	according to UL 1413, category 94-V1
Torque on neck clamp screw	1,0 Nm

ENVIRONMENTAL TEST SPECIFICATIONS OF DEFLECTION UNITS

Vibration	IEC 68-2-6 (test Fc)
Shock	IEC 68-2-27 (test Ea)
Bump	IEC 68-2-29 (test Eb; 25g)
Cold	IEC 68-2-1 (test Ab)
Dry heat	IEC 68-2-2 (test Bb)
Damp heat, steady state	IEC 68-2-3 (test Ca)
Cyclic damp heat	IEC 68-2-30 (test Db)
Change of temperature	IEC 68-2-14 (test Nb)

ELECTRICAL DATA OF DEFLECTION UNITS

parameter	deflection unit AT6060/00	AT6060/30	AT6060/42
Line deflection coils			
inductance at 1 V (r.m.s.), 1 kHz	2,43 mH ± 4%	2,43 mH ± 4%	1,64 mH ± 4%
resistance at 25 °C	3,2 Ω ± 10%	3,2 Ω ± 10%	2,1 Ω ± 10%
magnetic flux	5,14 mWb ± 2,5%	5,14 mWb ± 2,5%	4,20 mWb ± 2,5%
Line deflection current, edge to edge, at 23 kV	2,11 $A_{(p-p)}$	2,11 $A_{(p-p)}$	2,57 $A_{(p-p)}$
Field deflection coils			
inductance at 1 V (r.m.s.), 1 kHz	26,2 mH ± 10%	108 mH ± 10%	108 mH ± 10%
resistance at 25 °C	12,2 Ω ± 7%	49 Ω ± 7%	49 Ω ± 7%
Field deflection current, edge to edge, at 23 kV	0,82 $A_{(p-p)}$	0,41 $A_{(p-p)}$	0,41 $A_{(p-p)}$
Cross-talk: voltage across the field coils when a voltage of 10 V, 15625 Hz is applied to the line coils	< 0,2 V	< 0,4 V	< 0,4 V

Insulation resistance at 1 kV (d.c.)

between line and field coils	> 500 MΩ
between line coil and core clamp	> 500 MΩ
between field coil and core clamp	> 10 MΩ

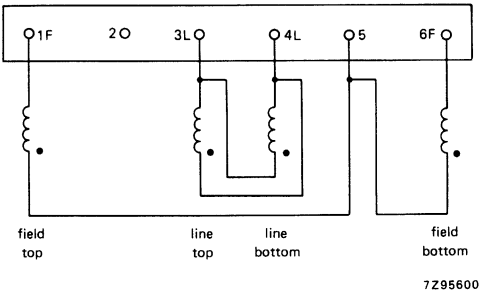

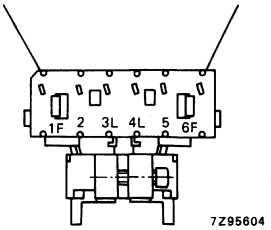

Connection diagram and top view of terminals of deflection unit AT6060/00. The beginning of the windings is indicated with ●.

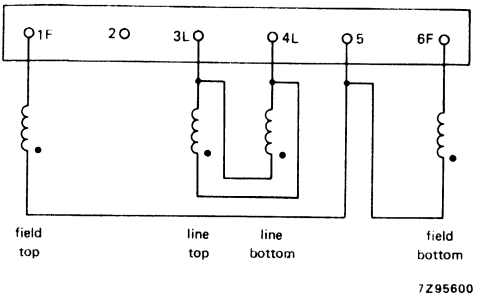

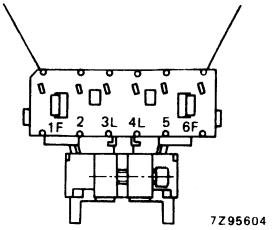

DEVELOPMENT DATA

Connection diagram and top view of terminals of deflection unit AT6060/30. The beginning of the windings is indicated with ●.

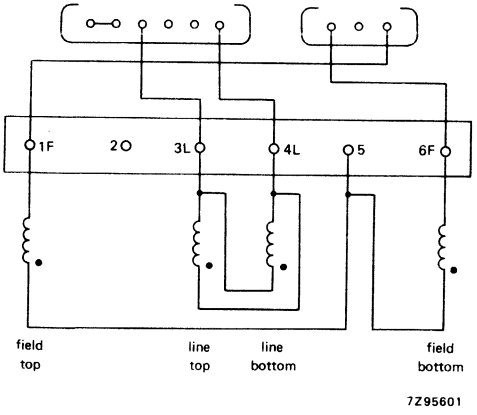

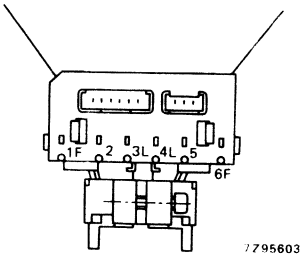

Connection diagram and top view of terminals of deflection unit AT6060/42. The beginning of the windings is indicated with ●.

Hi-Bri COLOUR PICTURE TUBE

- 90° deflection
- In-line gun, electrostatic bi-potential focus
- 29,1 mm neck diameter
- Hi-Bri screen with pigmented phosphor featuring high brightness and increased contrast performance
- Soft-Flash technology offering improved set reliability
- Slotted shadow mask optimized for minimum moiré
- Fine pitch over entire screen
- Phosphor lines follow glass contour
- Quick-heating cathodes
- Internal magnetic shield
- Reinforced envelope for push-through mounting
- When combined with an appropriate hybrid saddle toroidal deflection unit (e.g. AT1205), it forms a self-converging assembly; dynamic convergence is not required.

QUICK REFERENCE DATA

Deflection angle	90°
Face diagonal	37 cm
Overall length	337,5 mm
Neck diameter	29,1 mm
Heating	6,3 V, 685 mA
Focusing voltage	20% of anode voltage

ELECTRON-OPTICAL DATA

Electron gun system		unitized triple-aperture electrodes
Focusing method		electrostatic
Focus lens		bi-potential
Deflection method		magnetic
Deflection angles		
diagonal		approx. 90°
horizontal		approx. 78°
vertical		approx. 60°

ELECTRICAL DATA

Capacitances		
anode to external conductive coating including rimband	$C_{a(m+m')}$	max. 1600 pF min. 800 pF
grid 1 to all other electrodes	C_{g1}	15 pF
cathode of each gun to all other electrodes	C_{kR}, C_{kG}, C_{kB}	5 pF
focusing electrode to all other electrodes	C_{g3}	6 pF
Heating		indirect by a.c. or d.c.
heater voltage	V_f	6,3 V
heater current	I_f	685 mA

OPTICAL DATA

Screen	metal-backed vertical phosphor stripes; phosphor lines follow glass contour
Screen finish	satinized
Useful screen dimensions	
diagonal	min. 335,4 mm
horizontal axis	min. 280,8 mm
vertical axis	min. 210,6 mm
area	min. 580 cm^2
Phosphors	
red	pigmented europium activated rare earth
green	sulphide type
blue	pigmented sulphide type
Centre-to-centre distance of vertical identical colour phosphor stripes, at screen centre	0,65 mm
Light transmission of face glass at centre	68%

MECHANICAL DATA (see also the figures on the following pages)

Overall length	337,4 ± 5 mm
Neck diameter	$29{,}1\ ^{+1{,}4}_{-0{,}7}$ mm *
Bulb dimensions	
diagonal	max. 368 mm
width	max. 317 mm
height	max. 248 mm
Base	12-pin base JEDEC B12-262
Anode contact	small cavity contact J1-21, IEC 67-III-2
Mounting position	anode contact on top
Net mass	approx. 6 kg

Handling

During shipment and handling the tube should not be subjected to accelerations greater than 35g in any direction.

* In the region of 70 mm from the neck end, the maximum diameter is 30 mm.

MECHANICAL DATA (continued)

Dimensions in mm

Notes are given after the drawings.

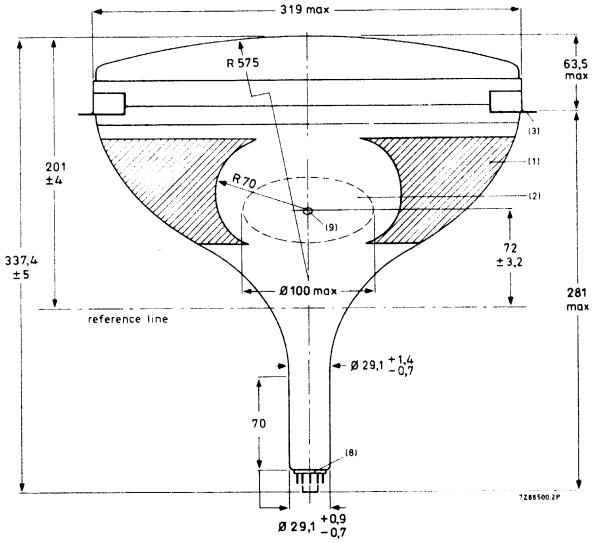

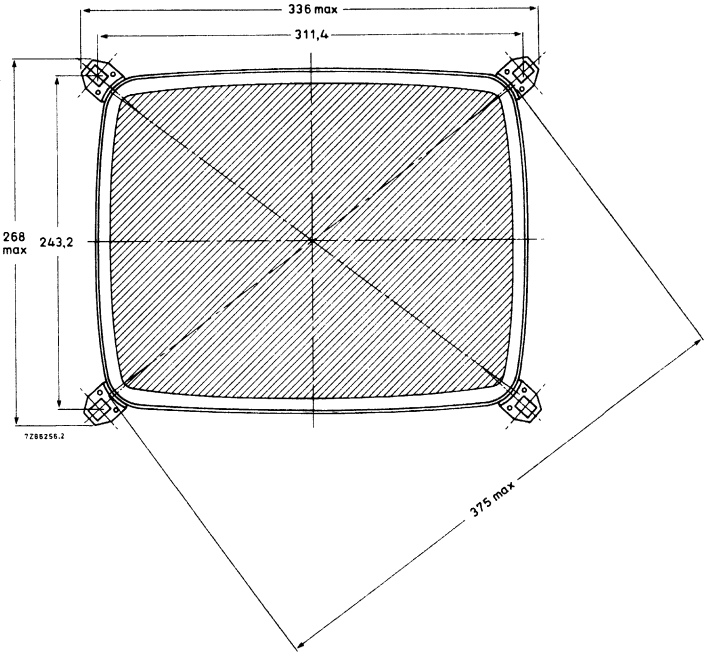

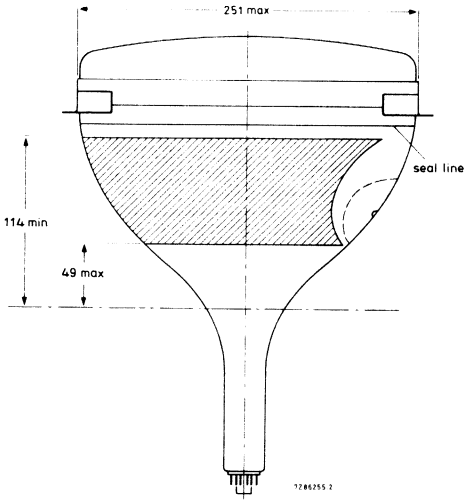

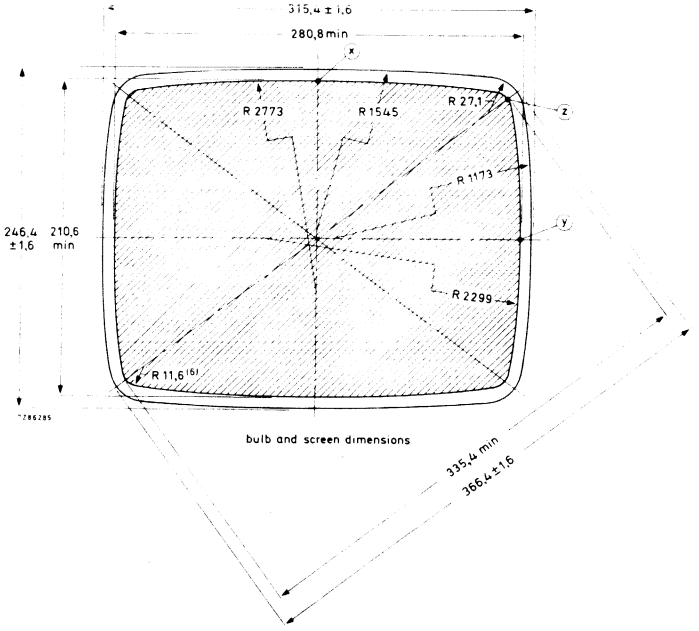

bulb and screen dimensions

MECHANICAL DATA (continued)

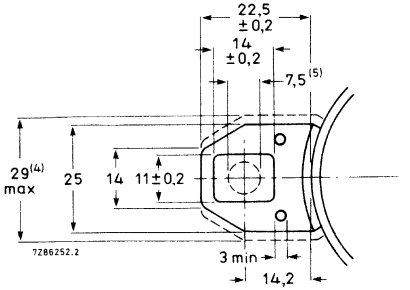

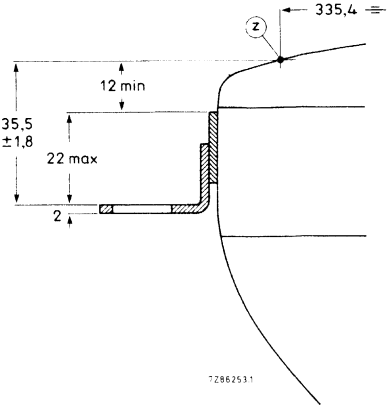

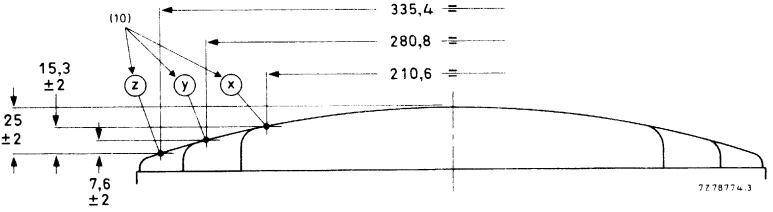

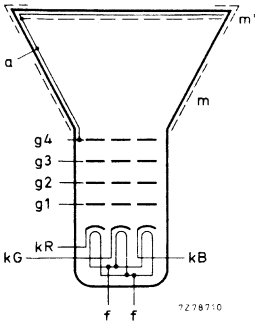

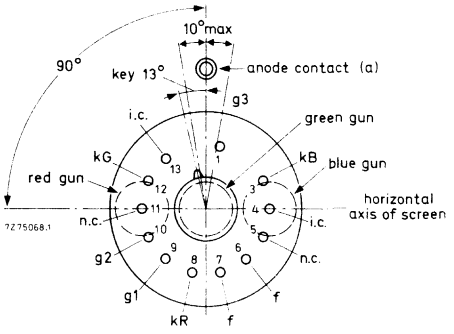

i.c. = internally connected (not to be used)
n.c. = not connected

Notes to outline drawings on the preceding pages

1. Configuration of outer conductive coating may be different, but will contain the contact area as shown in the drawing.
2. To clean this area, wipe only with a soft lintless cloth.
3. The displacement of any lug with respect to the plane through the three other lugs is max. 1,5 mm. This deviation is incorporated in the tolerance of ± 1,8 mm.
4. Minimum space to be reserved for mounting lug.
5. The position of the mounting screw in the cabinet must be within a circle of 7,5 mm diameter drawn around the true geometrical positions, i.e. the corners of a rectangle of 311,4 mm x 243,2 mm.
6. Co-ordinates for radius R = 11,6 mm: x = 126,98 mm, y = 90,76 mm.
7. Not applicable.
8. The socket for this base should not be rigidly mounted; it should have flexible leads and be allowed to move freely. After mounting of the tube in the cabinet note that the position of the base can fall within a circle, having a diameter of max. 50 mm, concentric with an imaginary tube axis. The mass of the mating socket with circuitry should not be more than 150 g, maximum permissible torque is 40 mNm.
9. Small cavity contact J1-21, IEC67-III-2,

Reference line gauge; GR90CJ4

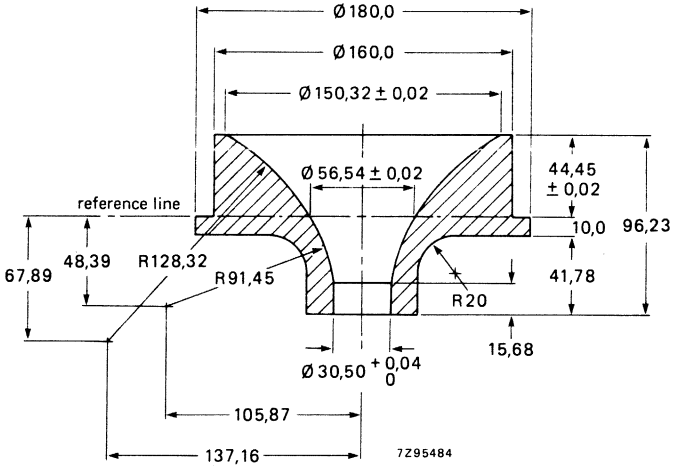

Maximum cone contour

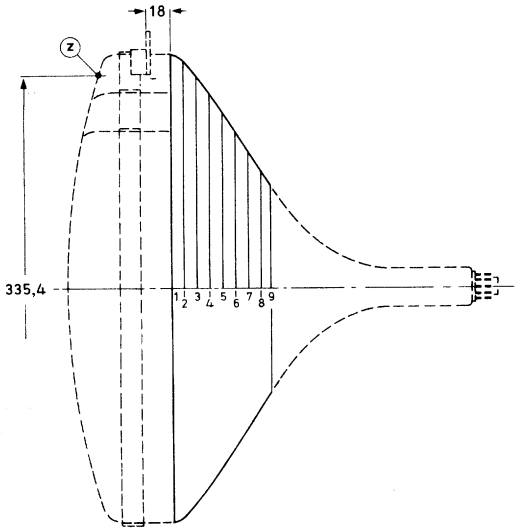

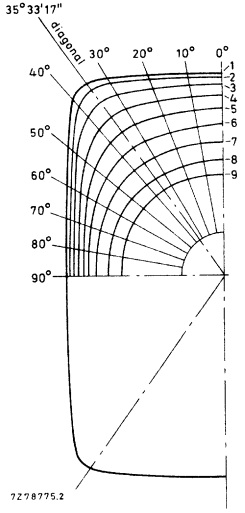

section	nom. distance from section 1	distance from centre (max. values)														
		0°	10°	20°	25°	30°	32° 30′	diag. axes	37° 30′	40°	45°	50°	60°	70°	80°	90°
1	0	157,2	159,4	166,3	171,7	178,2	181,2	183,6	183,3	180,0	167,9	156,5	140,0	129,8	124,2	122,4
2	10	154,7	156,9	163,5	168,5	174,1	176,6	178,1	177,7	174,8	164,4	153,7	137,8	127,9	122,4	120,7
3	20	148,8	150,7	156,3	160,0	163,5	164,6	165,0	164,4	162,6	156,0	147,7	133,6	124,4	119,3	117,7
4	30	140,4	142,1	146,2	148,6	150,5	151,0	151,1	150,7	149,6	145,6	140,0	128,6	120,3	115,7	114,2
5	40	130,3	131,3	134,0	135,4	136,5	136,8	136,8	136,6	136,1	134,1	130,8	122,7	115,9	111,7	110,3
6	50	118,2	118,8	120,1	120,9	121,6	121,8	122,0	122,0	121,9	121,2	119,8	115,4	110,5	107,0	105,8
7	60	104,9	104,7	105,1	105,5	106,0	106,2	106,5	106,7	106,9	107,1	107,0	105,6	103,1	100,8	99,8
8	70	90,6	89,9	89,8	90,0	90,4	90,6	90,9	91,1	91,4	91,9	92,3	92,5	91,7	90,4	89,7
9	77	79,9	79,1	79,0	79,1	79,4	79,6	79,9	80,1	80,4	80,9	81,4	81,8	81,4	80,5	79,9

12-pin base; JEDEC B12-262

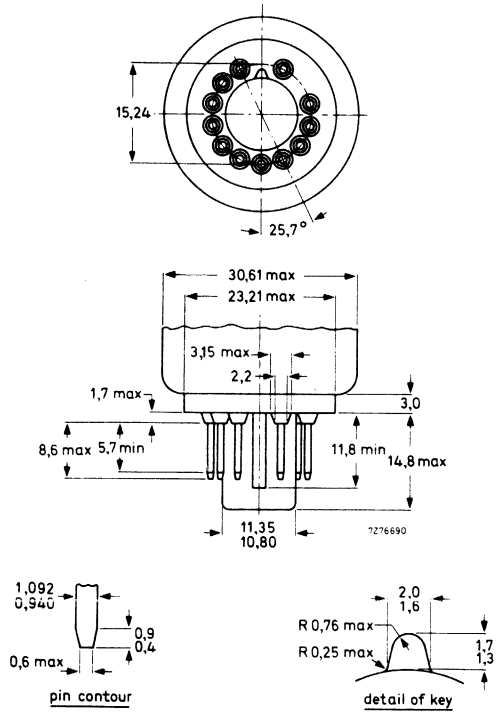

TYPICAL OPERATING CONDITIONS

The voltages are specified with respect to grid 1.

Anode voltage	$V_{a,g4}$	25 kV
Grid 3 (focusing electrode) voltage	V_{g3}	4,7 to 5,5 kV
Grid 2 voltage for a spot cut-off voltage V_k = 120 V	V_{g2}	310 to 560 V
Luminance at the centre of the screen *	L	175 cd/m^2

* Tube settings adjusted to produce white of 6500K + 7 M.P.C.D. (x = 0,313, y = 0,329), focused raster, current density 0,4 μA/cm^2.

EQUIPMENT DESIGN VALUES

The values are valid for anode voltages between 20 and 27,5 kV.
The voltages are specified with respect to grid 1.

Grid 3 (focusing electrode) voltage	V_{g3}	18,8 to 22% of anode voltage
Grid 2 voltage and cathode voltage for visual extinction of focused spot	V_{g2} and V_k	see cut-off design chart *
Difference in cut-off voltages between guns in any tube	ΔV_k	lowest value > 80% of highest value
Video drive characteristics		see graphs **
Grid 3 (focusing electrode) current	I_{g3}	−5 to + 5 μA
Grid 2 current	I_{g2}	−5 to + 5 μA
Grid 1 current under cut-off conditions	I_{g1}	−5 to + 5 μA
To produce white of 6500K + 7 M.P.C.D. (CIE co-ordinates x = 0,313, y = 0,329)		
Percentage of the total anode current supplied by each gun (typical)		
red gun		38,3%
green gun		35,8%
blue gun		25,9%
Ratio of anode currents		
red gun to green gun		min. 0,8
		average 1,1
		max. 1,4
red gun to blue gun		min. 1,1
		average 1,5
		max. 1,9
blue gun to green gun		min. 0,5
		average 0,7
		max. 0,9

* The common V_{g2} should be adjusted as follows:
Set the cathode voltage, V_k, for each gun at 130 V. Increase the V_{g2} from about 300 V to the value at which the raster of one of the guns becomes just visible. Now decrease the V_k of the remaining guns so that the rasters of these guns also become visible.

** For optimum picture performance it is recommended that the cathodes are not driven below + 10 V.

LIMITING VALUES (Design maximum rating system unless otherwise stated)

The voltages are specified with respect to grid 1.

Anode voltage	$V_{a,g4}$	max.	27,5 kV	notes 1, 2, 3
		min.	20 kV	notes 1 and 4
Long-term average current for three guns	I_a	max.	750 μA	note 5
Grid 3 (focusing electrode) voltage	V_{g3}	max.	7 kV	
Grid 2 voltage, peak	V_{g2p}	max.	1000 V	
Cathode voltage				
positive	V_k	max.	400 V	
positive operating cut-off	V_k	max.	200 V	
negative	$-V_k$	max.	0 V	
negative peak	$-V_{kp}$	max.	2 V	
Heater voltage	V_f	6,3 V	+ 5 % −10 %	notes 1 and 6
Heater-cathode voltage				
heater negative with respect to cathode				
during equipment warm-up period not exceeding 15 s	V_{kf}	max.	450 V	note 1
after equipment warm-up period	V_{kf}	max.	250 V	
heater positive with respect to cathode	$-V_{kfp}$	peak	200 V	note 1
	$-V_{kf}$	max.	0 V	
		(d.c. component value)		

Notes

1. Absolute maximum rating system.
2. The X-ray dose rate remains below the acceptable value of 0,5 mR/h, measured with ionization chamber when the tube is used within its limiting values.
3. During adjustment on the production line this value is likely to be surpassed considerably. It is therefore strongly recommended to first make the necessary adjustments for normal operation without picture tube.
4. Operation of the tube at lower voltages impairs the luminance and resolution.
5. The short-term average anode current should be limited by circuitry to 1000 μA.
6. For maximum cathode life and optimum performance, it is recommended that the heater supply be designed for 6,3 V at zero beam current.

FLASHOVER PROTECTION

With the high voltage used with this tube (max. 27,5 kV) internal flashovers may occur. As a result of the Soft-Flash technology these flashover currents are limited to approx. 60 A offering higher set reliability, optimum circuit protection and component savings.
Primary protective circuitry using properly grounded spark gaps and series isolation resistors (preferably carbon composition) is still necessary to prevent tube damage. The spark gaps should be connected to all picture tube electrodes at the socket according to the figure below; they are not required on the heater pins. No other connections between the outer conductive coating and the chassis are permissible.
The spark gaps should be designed for a breakdown voltage at the focusing electrode (g3) of 8,5 kV ($1{,}5 \times V_{g3}$ max. at $V_{a,g4} = 25$ kV), and at the other electrodes of 1,5 to 2 kV.
The values of the series isolation resistors should be as high as possible (min. 1,5 kΩ) without causing deterioration of the circuit performance. The resistors should be able to withstand an instantaneous surge of 20 kV for the focusing circuit and 12 kV for the remaining circuits without arcing.
Additional information is available on request.

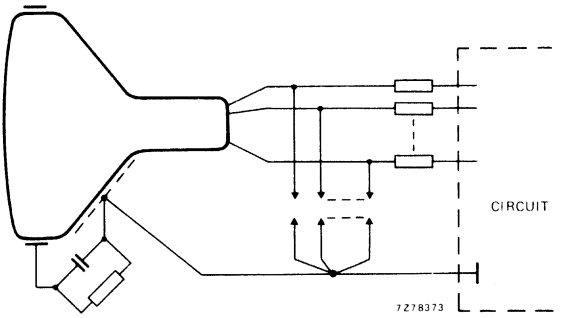

BEAM CORRECTIONS

Maximum required correction for register, as measured at the centre of the screen in any direction	0,08 mm
Centre convergence displacement of the blue and red beams is contained within a circle; max. diameter of circle	4 mm
Centre convergence displacement between the green beam and converged blue and red beams is contained within a circle; maximum diameter of circle	2 mm
Maximum centring error in any direction after colour purity, static convergence, and horizontal centre line correction, measured with deflection coils in nominal position	5 mm

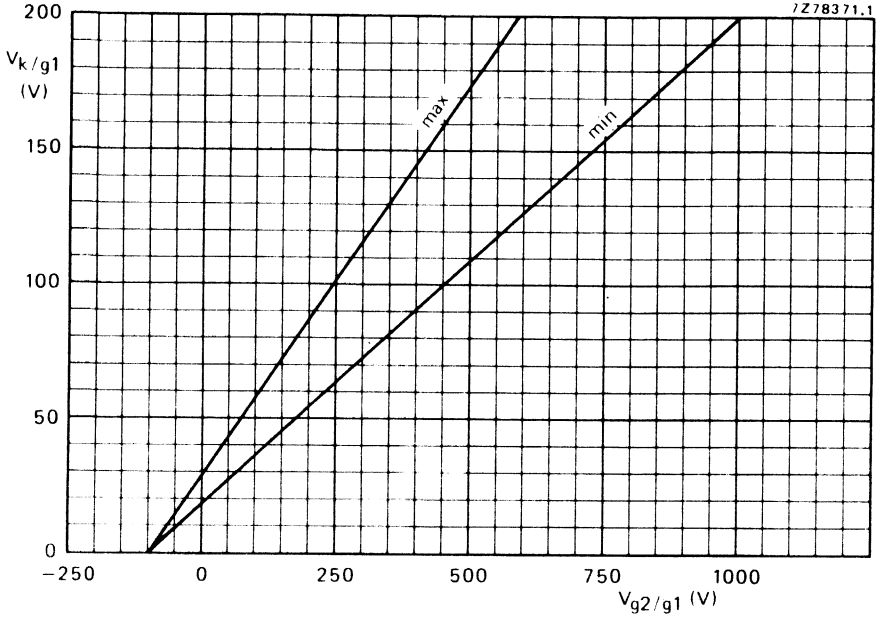

Spot cut-off design chart (cathode drive), V_{g3} adjusted for focus, $V_{a,g4}$ = 20 to 27,5 kV.

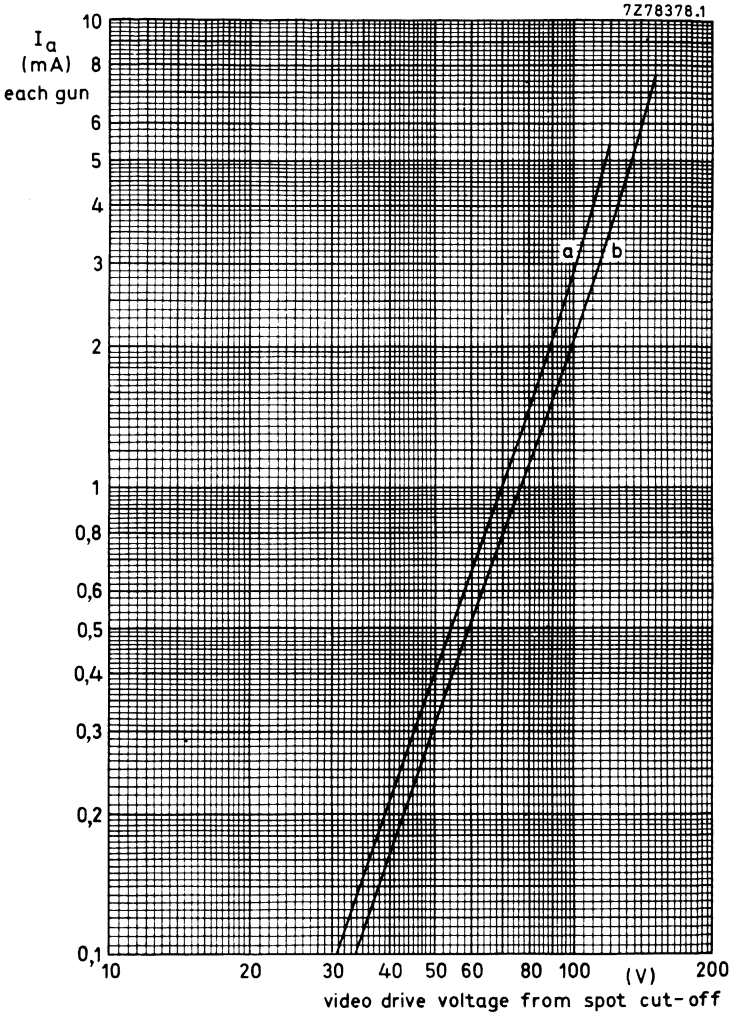

Typical cathode drive characteristics.

V_f = 6,3 V;

$V_{a,g4}$ = 25 kV;

V_{g3} adjusted for focus;

V_{g2} adjusted to provide spot cut-off for desired fixed V_k.

curve a = spot cut-off = 120 V;

curve b = spot cut-off = 150 V.

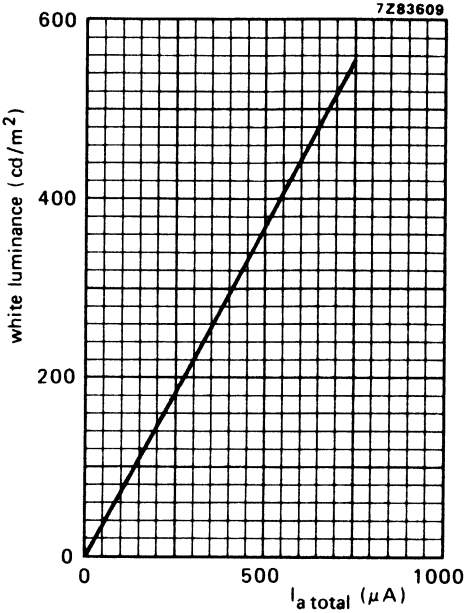

Luminance at the centre of the screen as a function of I_{total}.
$V_{a,g4}$ = 25 kV, V_f = 6,3 V, V_{g3} adjusted for optimum focus.
Scanned area = 280,8 mm x 210,6 mm;
CIE co-ordinates x = 0,313, y = 0,329.

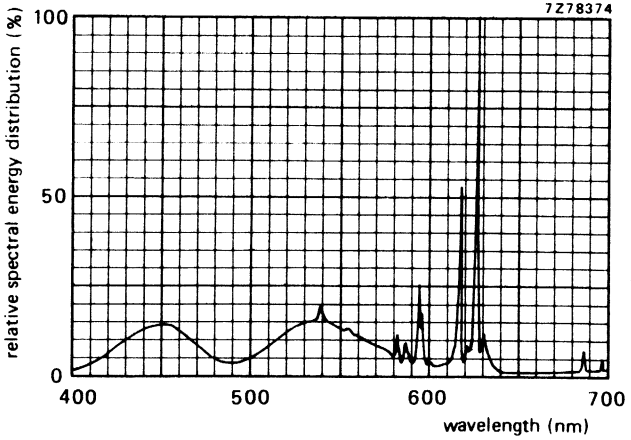

Simultaneous excitation of red, green and blue phosphor, measured in a tube, to produce white of x = 0,313, y = 0,329. Exact shape of the peaks depends on the resolution of the measuring apparatus.

Colour co-ordinates:	x	y
red	0,635	0,340
green	0,315	0,600
blue	0,150	0,060

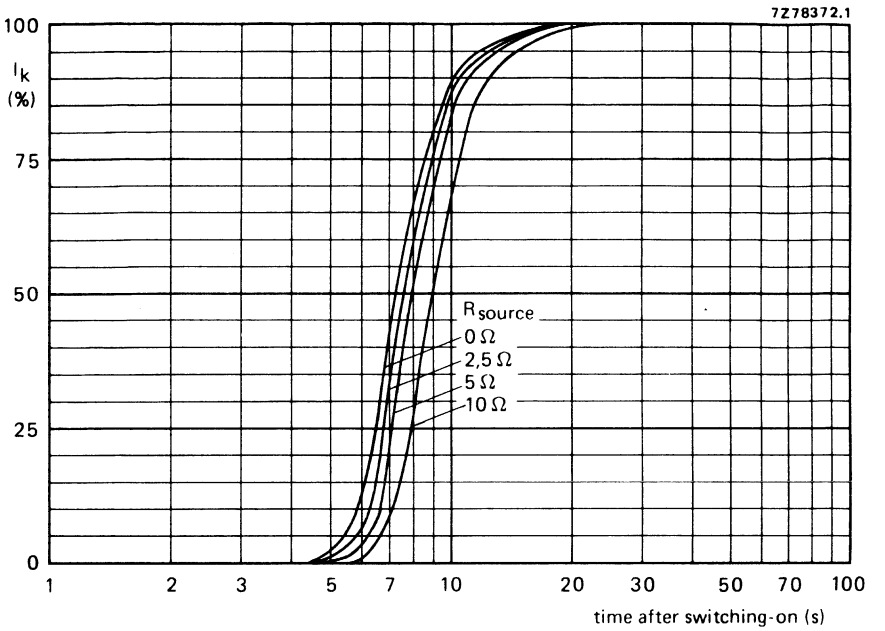

Cathode heating time after switching on, measured under typical operating conditions.

DEGAUSSING

The picture tube is provided with an internal magnetic shield. This shield and the shadow mask with its suspension system may be provided with an automatic degaussing system, consisting of one magnetic coil winding mounted on the cone of the picture tube.

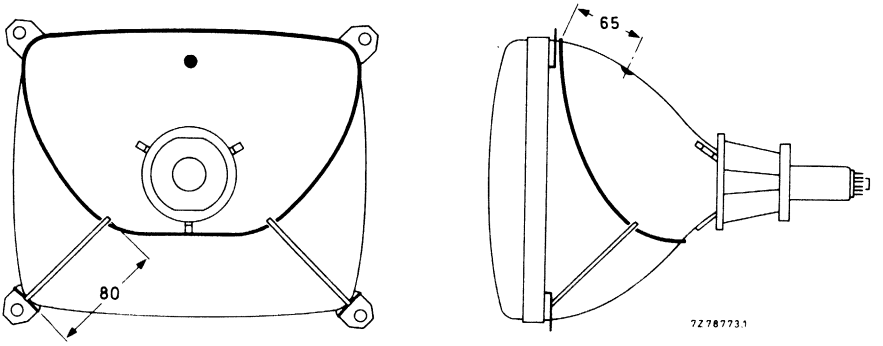

Position of degaussing coil on the picture tube; dimensions are given in mm.

For proper degaussing an initial magnetomotive force (m.m.f.) of 600 ampere-turns is required in the coil. This m.m.f. has to be gradually decreased by appropriate degaussing circuitry. In the steady state, no significant m.m.f. should remain in the coil ($\leqslant$ 0,6 ampere-turns). If single-phase power rectification is employed in the t.v. circuitry, provision should be included to prevent asymmetric distortion of the a.c. voltage applied to the degaussing circuit due to high d.c. inrush currents. An example of a degaussing circuit and coil data for various mains voltages are given below.

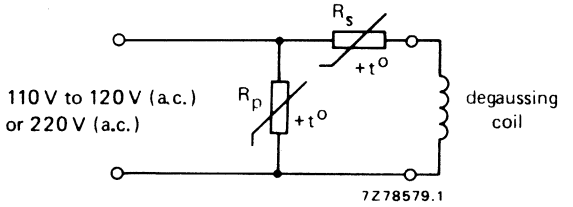

Degaussing circuit using dual PTC thermistor.

Data of degaussing coil

	110 V (a.c.) mains	220 V (a.c.) mains
Circumference	90 cm	90 cm
Number of turns	70	120
Copper-wire diameter	0,45 mm	0,3 mm
Resistance	6,7 Ω	25,9 Ω
Catalogue number of appropriate dual PTC thermistor	8222 298 73091	2322 662 98009

DEFLECTION UNIT

QUICK REFERENCE DATA

Picture tube	
gun arrangement	in line
diagonal	37 cm (14 in)
neck diameter	29,1 mm
Deflection angle	90°
Line deflection current, edge to edge at 25 kV	3,0 A (p-p)
Inductance of line coils, parallel connected	1,85 mH
Field deflection current, edge to edge at 25 kV	0,42 A (p-p)
Resistance of field coils, series connected	50 Ω

APPLICATION

This deflection unit, in conjunction with devices for colour purity and static convergence, is for 90° in-line colour picture tube A37-573X, with a neck diameter of 29,1 mm.

DESCRIPTION

The deflection unit consists of saddle-shaped line deflection coils and toroidal wound field deflection coils, thus forming a hybrid yoke. The unit has a metal non-magnetic clamping ring at the rear, to fix the deflection unit on the neck of the picture tube. With the deflection unit positioned axially for optimum purity, a clearance is available at the front which permits adjustment of convergence by tilting the unit in the vertical and/or horizontal plane. Wedges are recommended to secure the deflection unit in the chosen position.

MECHANICAL DATA

Dimensions in mm

Outlines

The deflection unit fits a tube with a neck diameter of $29{,}1\ ^{+0{,}9}_{-0{,}7}$ mm.

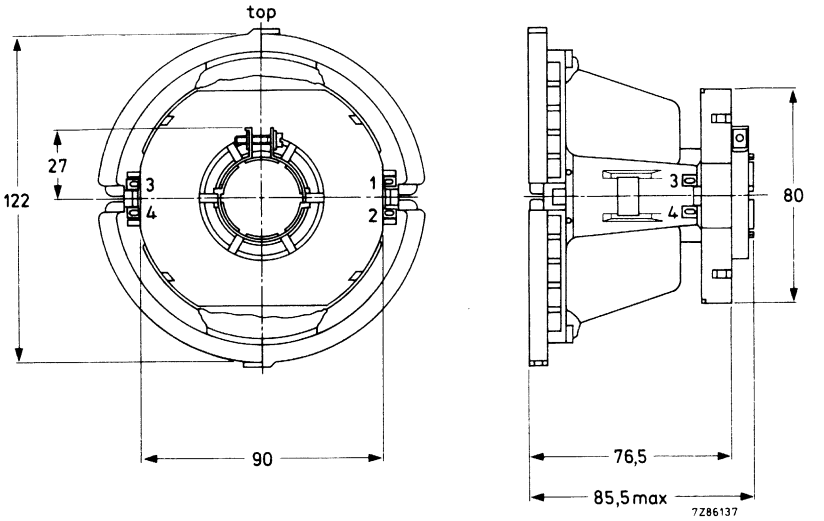

Fig. 1.

Maximum operating temperature (average copper temperature measured with resistance method)	+90 °C
Storage temperature range	−20 to +90 °C
Flame retardent	according to UL1413, category 94-V1
Torque on neck clamp screw	1,4 Nm

ENVIRONMENTAL TEST SPECIFICATIONS

Vibration	IEC 68-2-6 (test Fc)
Bump	IEC 68-2-29 (test Eb; 35g)
Cold	IEC 68-2-1 (test Ab)
Dry heat	IEC 68-2-2 (test Bb)
Damp heat, steady state	IEC 68-2-3 (test Ca)
Cyclic damp heat	IEC 68-2-30 (test Db)
Change of temperature	IEC 68-2-14 (test Nb)

ELECTRICAL DATA

Line coils	parallel connected
Inductance at 1 V (r.m.s.), 1 kHz	1,85 mH ± 5%
Resistance at 25 °C	2,0 Ω ± 10%
Line deflection current, edge to edge, at 25 kV	3,0 A(p-p)
Field coils	series connected
Inductance at 1 V (r.m.s.), 1 kHz	109 mH ± 10%
Resistance at 25 °C	50 Ω ± 7%
Field deflection current, edge to edge, at 25 kV	0,42 A(p-p)
Cross-talk	a voltage of 10 V, 15750 Hz applied to the line coils causes no more than 0,2 V across the field coils (damping resistors included)
Insulation resistance at 1 kV (d.c.)	
between line and field coils	> 500 MΩ
between line coil and core clamp	> 500 MΩ
between field coil and core clamp	> 10 MΩ

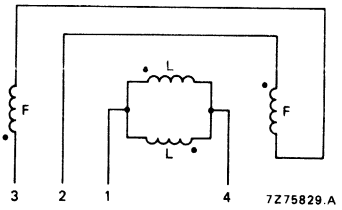

Fig. 2 Connection diagram, L = Line, F = Field.

ADJUSTMENT

- Adjust the static convergence with the four and six-pole magnets of the multipole unit AT1052 for the relative movement of the beams under influence of a four or six-pole magnet.
- Adjust colour purity by axial movement of the deflection yoke and adjustment of the two-pole magnets for centring of the beams.
- Tighten the screw of the clamping ring on the deflection yoke to secure the axial position of the unit on the picture tube.
- Readjust, if necessary, the convergence with the four and six-pole magnets.
- Tilt the unit in either horizontal or vertical direction, or in both directions so that blue, green and red lines converge at the end of the horizontal and vertical axis.
- This position of the unit has to be secured by three rubber wedges placed between the picture tube and the deflection unit. These wedges have to be cemented on to the picture tube.

Hi-Bri COLOUR PICTURE TUBE

- 90° deflection
- In-line gun, thermally stable; electrostatic hi-bi potential focus
- 29,1 mm neck diameter
- Hi-Bri screen with pigmented phosphor featuring high brightness and increased contrast performance
- Soft-Flash technology offering improved set reliability
- Slotted shadow mask optimized for minimum moiré
- Fine pitch over entire screen
- Phosphor lines follow glass contour
- Quick-heating cathodes
- Internal magnetic shield
- Reinforced envelope for push-through mounting
- When combined with an appropriate hybrid saddle toroidal deflection unit (e.g. AT1206), it forms a self-converging and raster correction free assembly.

QUICK REFERENCE DATA

Deflection angle	90°
Face diagonal	37 cm
Overall length	342 mm
Neck diameter	29,1 mm
Heating	6,3 V, 685 mA
Focusing voltage	28% of anode voltage

ELECTRON-OPTICAL DATA

Electron gun system		unitized triple-aperture electrodes
Focusing method		electrostatic
Focus lens		hi-bi-potential
Deflection method		magnetic
Deflection angles		
diagonal		approx. 90°
horizontal		approx. 78°
vertical		approx. 60°

ELECTRICAL DATA

Capacitances		
anode to external conductive coating including rimband	$C_{a(m+m')}$	max. 1600 pF min. 800 pF
grid 1 to all other electrodes	C_{g1}	17 pF
cathode of each gun to all other electrodes	C_{kR}, C_{kG}, C_{kB}	5 pF
focusing electrode to all other electrodes	C_{g3}	6 pF
Heating		indirect by a.c. or d.c.
heater voltage	V_f	6,3 V
heater current	I_f	685 mA

OPTICAL DATA

Screen	metal-backed vertical phosphor stripes; phosphor lines follow glass contour
Screen finish	satinized
Useful screen dimensions	
diagonal	min. 335,4 mm
horizontal axis	min. 280,8 mm
vertical axis	min. 210,6 mm
area	min. 580 cm^2
Phosphors	
red	pigmented europium activated rare earth
green	sulphide type
blue	pigmented sulphide type
Centre-to-centre distance of vertical identical colour phosphor stripes, at screen centre	0,65 mm
Light transmission of face glass at centre	68%

MECHANICAL DATA (see also the figures on the following pages)

Overall length	342,1 ± 5 mm
Neck diameter	$29{,}1\ ^{+1{,}4}_{-0{,}7}$ mm *
Bulb dimensions	
diagonal	max. 368 mm
width	max. 317 mm
height	max. 248 mm
Base	10-pin base JEDEC B10-277
Anode contact	small cavity contact J1-21, IEC 67-III-2
Mounting position	anode contact on top
Net mass	approx. 6 kg

Handling

During shipment and handling the tube should not be subjected to accelerations greater than 35 g in any direction.

* In the region of 70 mm from the neck end, the maximum diameter is 30 mm.

MECHANICAL DATA (continued)

Dimensions in mm

Notes are given after the drawings.

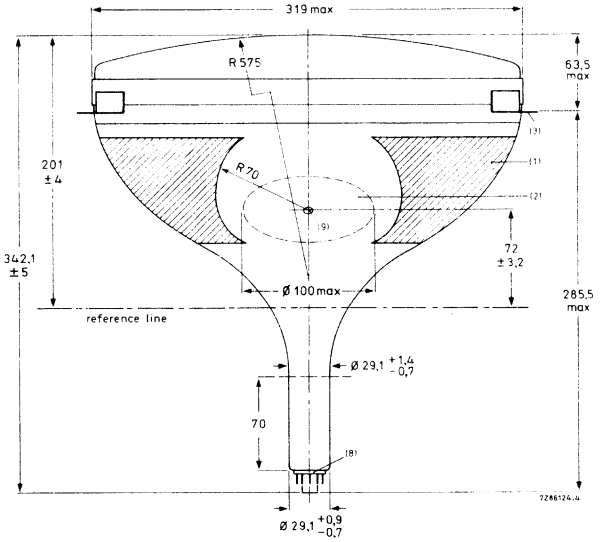

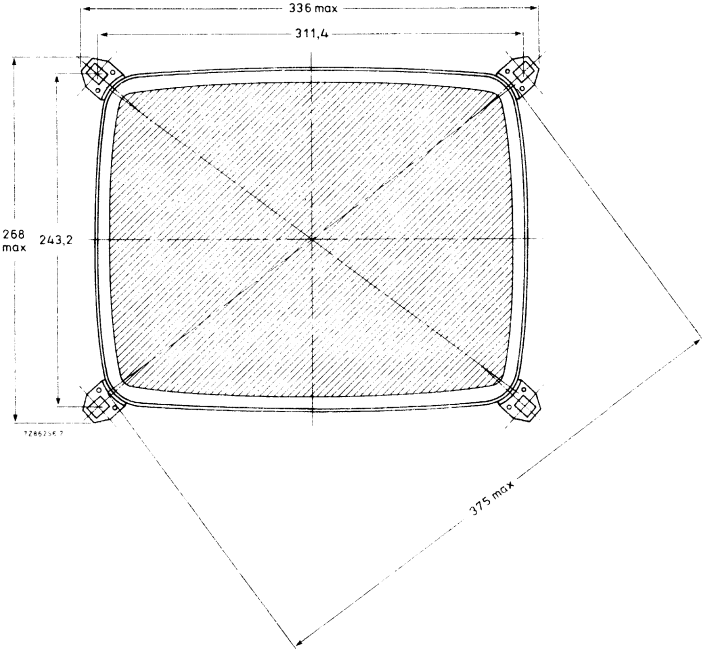

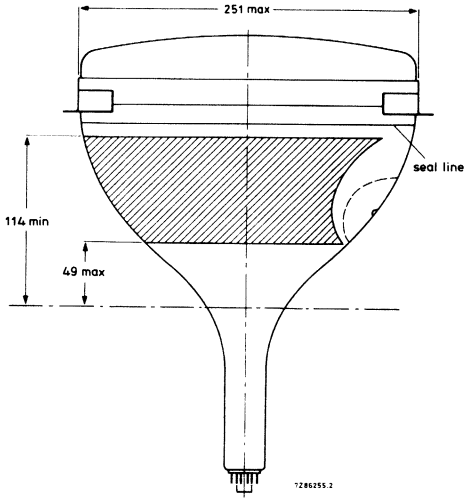
251 max
seal line
114 min
49 max
7Z86255.2

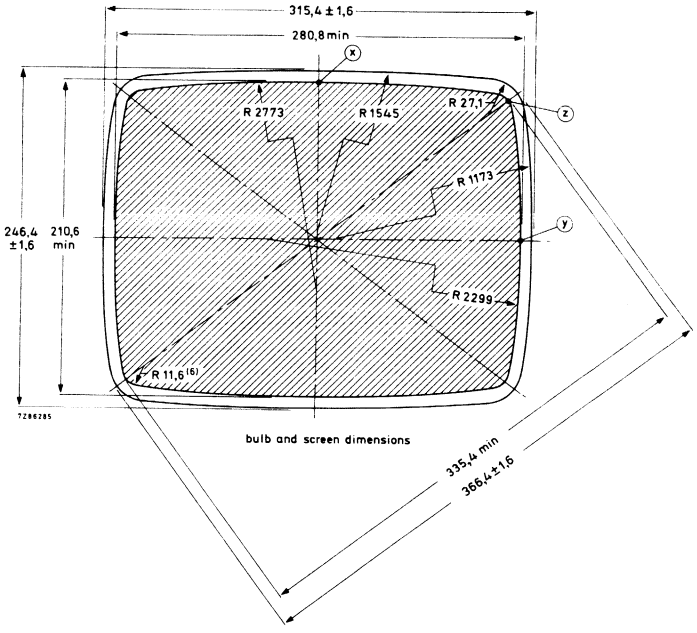
315,4 ± 1,6
280,8 min
x
R 2773
R 1545
R 27.1
z
R 1173
y
246,4 ±1,6
210,6 min
R 2299
R 11,6 (6)
7Z86285
bulb and screen dimensions
335,4 min
366,4 ± 1,6

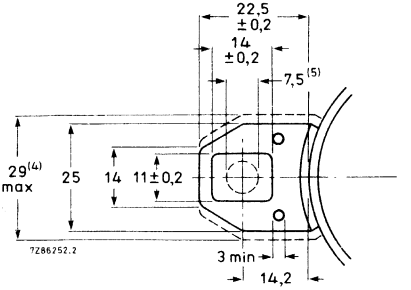

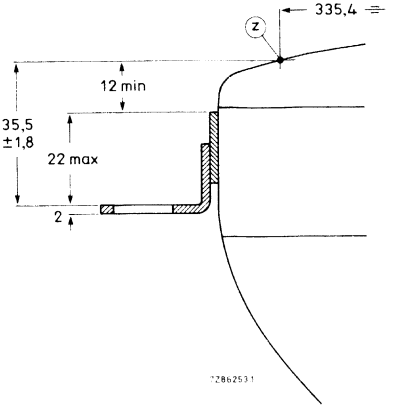

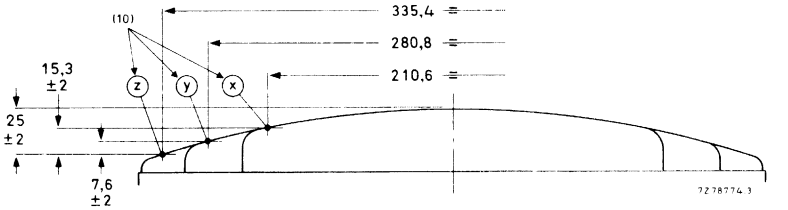

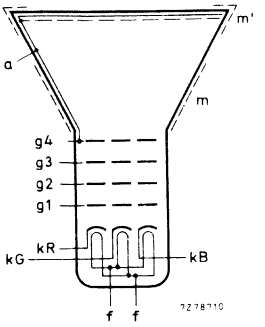

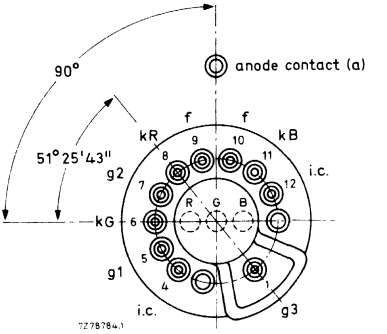

i.c. = internally connected
(not to be used).

Notes to outline drawings on the preceding pages

1. Configuration of outer conductive coating may be different, but will contain the contact area as shown in the drawing.
2. To clean this area, wipe only with a soft lintless cloth.
3. One of the four mounting lugs may deviate (1,5 mm max.) from the plane of the other three lugs. This deviation is incorporated in the tolerance of ± 1,8 mm.
4. Minimum space to be reserved for mounting lug.
5. The position of the mounting screw in the cabinet must be within a circle of 7,5 mm diameter drawn around the true geometrical positions, i.e. the corners of a rectangle of 311,4 mm x 243,2 mm.
6. Co-ordinates for radius R = 11,6 mm: x = 126,98 mm, y = 90,76 mm.
7. Not applicable.
8. The socket for this base should not be rigidly mounted; it should have flexible leads and be allowed to move freely. After mounting of the tube in the cabinet note that the position of the base can fall within a circle, having a diameter of max. 50 mm, concentric with an imaginary tube axis. The mass of the mating socket with circuitry should not be more than 150 g, maximum permissible torque is 40 mNm.
9. Small cavity contact J1-21, IEC67-III-2.
10. The X, Y and Z reference points are located on the outside surface of the face plate at the intersection of the minor, major and diagonal screen axis respectively, with the minimum published screen.

Reference line gauge; GR90CJ4

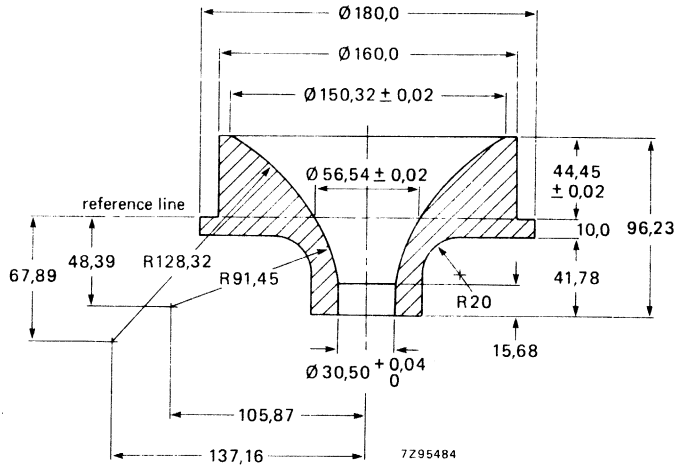

Maximum cone contour

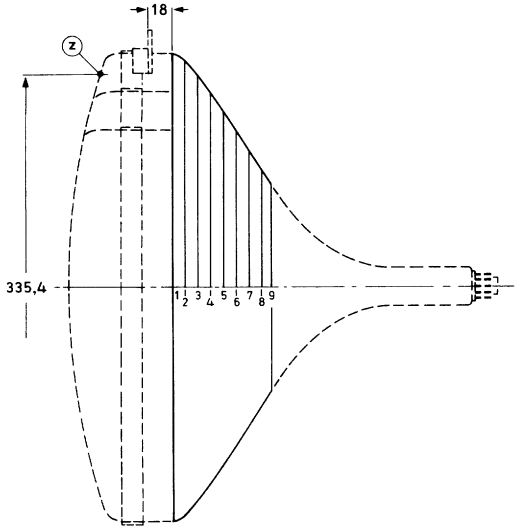

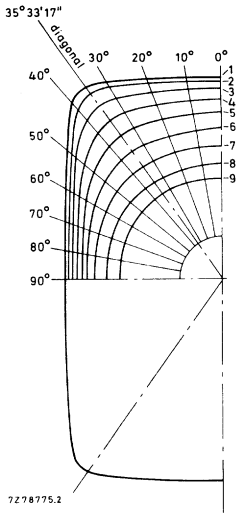

section	nom. distance from section 1	distance from centre (max. values)														
		0°	10°	20°	25°	30°	32° 30′	diag. axes	37° 30′	40°	45°	50°	60°	70°	80°	90°
1	0	157,2	159,4	166,3	171,7	178,2	181,2	183,6	183,3	180,0	167,9	156,5	140,0	129,8	124,2	122,4
2	10	154,7	156,9	163,5	168,5	174,1	176,6	178,1	177,7	174,8	164,4	153,7	137,8	127,9	122,4	120,7
3	20	148,8	150,7	156,3	160,0	163,5	164,6	165,0	164,4	162,6	156,0	147,7	133,6	124,4	119,3	117,7
4	30	140,4	142,1	146,2	148,6	150,5	151,0	151,1	150,7	149,6	145,6	140,0	128,6	120,3	115,7	114,2
5	40	130,3	131,3	134,0	135,4	136,5	136,8	136,8	136,6	136,1	134,1	130,8	122,7	115,9	111,7	110,3
6	50	118,2	118,8	120,1	120,9	121,6	121,8	122,0	122,0	121,9	121,2	119,8	115,4	110,5	107,0	105,8
7	60	104,9	104,7	105,1	105,5	106,0	106,2	106,5	106,7	106,9	107,1	107,0	105,6	103,1	100,8	99,8
8	70	90,6	89,9	89,8	90,0	90,4	90,6	90,9	91,1	91,4	91,9	92,3	92,5	91,7	90,4	89,7
9	77	79,9	79,1	79,0	79,1	79,4	79,6	79,9	80,1	80,4	80,9	81,4	81,8	81,4	80,5	79,9

10-pin base; JEDEC B10-277

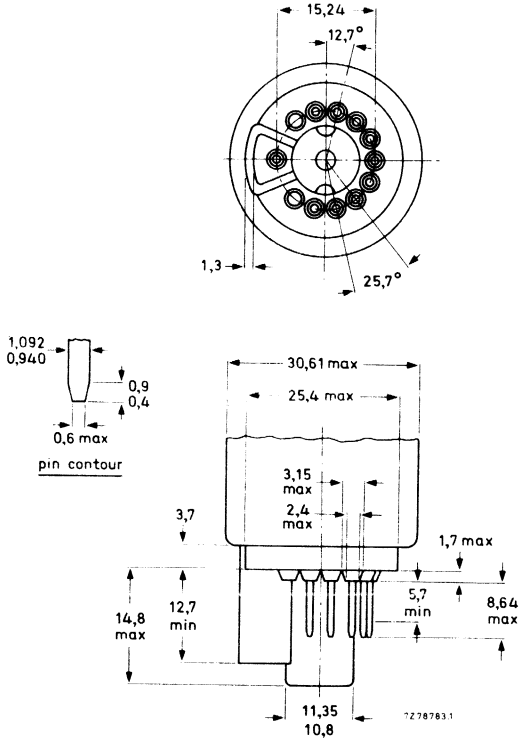

TYPICAL OPERATING CONDITIONS

The voltages are specified with respect to grid 1.

Anode voltage	$V_{a,g4}$	25 kV
Grid 3 (focusing electrode) voltage	V_{g3}	6,6 to 7,5 kV
Grid 2 voltage for a spot cut-off voltage V_k = 140 V	V_{g2}	390 to 760 V
Luminance at the centre of the screen*	L	175 cd/m²

* Tube settings adjusted to produce white of 6500K + 7 M.P.C.D. (x = 0,313, y = 0,329) focused raster, current density 0,4 μA/cm².

EQUIPMENT DESIGN VALUES

The values are valid for anode voltages between 20 and 27,5 kV.
The voltages are specified with respect to grid 1.

Grid 3 (focusing electrode) voltage	V_{g3}	26,6 to 29,8% of anode voltage
Grid 2 voltage and cathode voltage for visual extinction of focused spot	V_{g2} and V_k	see cut-off design chart *
Difference in cut-off voltages between guns in any tube	ΔV_k	lowest value > 80% of highest value
Video drive characteristics		see graphs **
Grid 3 (focusing electrode) current	I_{g3}	−5 to + 5 μA
Grid 2 current	I_{g2}	−5 to + 5 μA
Grid 1 current under cut-off conditions	I_{g1}	−5 to + 5 μA
To produce white of 6500K + 7 M.P.C.D. (CIE co-ordinates x = 0,313, y = 0,329)		
Percentage of the total anode current supplied by each gun (typical)		
red gun		38,3%
green gun		35,8%
blue gun		25,9%
Ratio of anode currents		
red gun to green gun		min. 0,8
		average 1,1
		max. 1,4
red gun to blue gun		min. 1,1
		average 1,5
		max. 1,9
blue gun to green gun		min. 0,5
		average 0,7
		max. 0,9

* The common V_{g2} should be adjusted as follows:
Set the cathode voltage, V_k, for each gun at 150 V. Increase the V_{g2} from about 400 V to the value at which the raster of one of the guns becomes just visible. Now decrease the V_k of the remaining guns so that the rasters of these guns also become visible.

** For optimum picture performance it is recommended that the cathodes are not driven below + 10 V.

LIMITING VALUES (Design maximum rating system unless otherwise stated)

The voltages are specified with respect to grid 1.

Anode voltage	$V_{a,g4}$	max.	27,5 kV	notes 1, 2, 3
		min.	20 kV	notes 1 and 4
Long-term average current for three guns	I_a	max.	750 μA	note 5
Grid 3 (focusing electrode) voltage	V_{g3}	max.	11 kV	
Grid 2 voltage, peak	V_{g2p}	max.	1000 V	
Cathode voltage				
positive	V_k	max.	400 V	
positive operating cut-off	V_k	max.	200 V	
negative	$-V_k$	max.	0 V	
negative peak	$-V_{kp}$	max.	2 V	
Heater voltage	V_f	6,3 V	+ 5 % −10 %	notes 1 and 6
Heater-cathode voltage				
heater negative with respect to cathode				
during equipment warm-up period not exceeding 15 s	V_{kf}	max.	450 V	note 1
after equipment warm-up period	V_{kf}	max.	250 V	
heater positive with respect to cathode	$-V_{kfp}$	peak	200 V	note 1
	$-V_{kf}$	max. (d.c. component value)	0 V	

Notes

1. Absolute maximum rating system.
2. The X-ray dose rate remains below the acceptable value of 0,5 mR/h, measured with ionization chamber when the tube is used within its limiting values.
3. During adjustment on the production line this value is likely to be surpassed considerably. It is therefore strongly recommended to first make the necessary adjustments for normal operation without picture tube.
4. Operation of the tube at lower voltages impairs the luminance and resolution.
5. The short-term average anode current should be limited by circuitry to 1000 μA.
6. For maximum cathode life and optimum performance, it is recommended that the heater supply be designed for 6,3 V at zero beam current.

FLASHOVER PROTECTION

With the high voltage used with this tube (max. 27,5 kV) internal flashovers may occur. As a result of the Soft-Flash technology these flashover currents are limited to approx. 60 A offering higher set reliability, optimum circuit protection and component savings.
Primary protective circuitry using properly grounded spark gaps and series isolation resistors (preferably carbon composition) is still necessary to prevent tube damage. The spark gaps should be connected to all picture tube electrodes at the socket according to the figure below; they are not required on the heater pins. No other connections between the outer conductive coating and the chassis are permissible.
The spark gaps should be designed for a breakdown voltage at the focusing electrode (g3) of 11 kV ($1,5 \times V_{g3}$ max. at $V_{a,g4}$ = 25 kV), and at the other electrodes of 1,5 to 2 kV.
The values of the series isolation resistors should be as high as possible (min. 1;5 kΩ) without causing deterioration of the circuit performance. The resistors should be able to withstand an instantaneous surge of 20 kV for the focusing circuit and 12 kV for the remaining circuits without arcing.
Additional information is available on request.

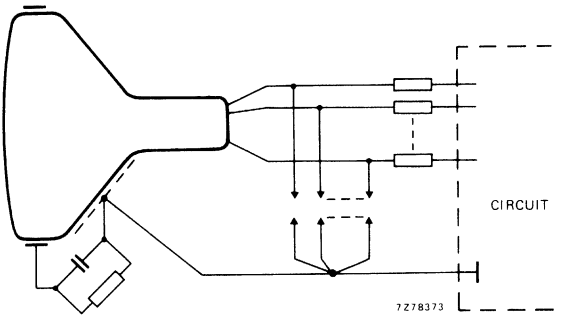

BEAM CORRECTIONS

Maximum required correction for register, as measured at the centre of the screen in any direction	0,08 mm
Centre convergence displacement of the blue and red beams is contained within a circle; max. diameter of circle	4 mm
Centre convergence displacement between the green beam and converged blue and red beams is contained within a circle; maximum diameter of circle	2 mm
Maximum centring error in any direction after colour purity, static convergence, and horizontal centre line correction, measured with deflection coils in nominal position	5 mm

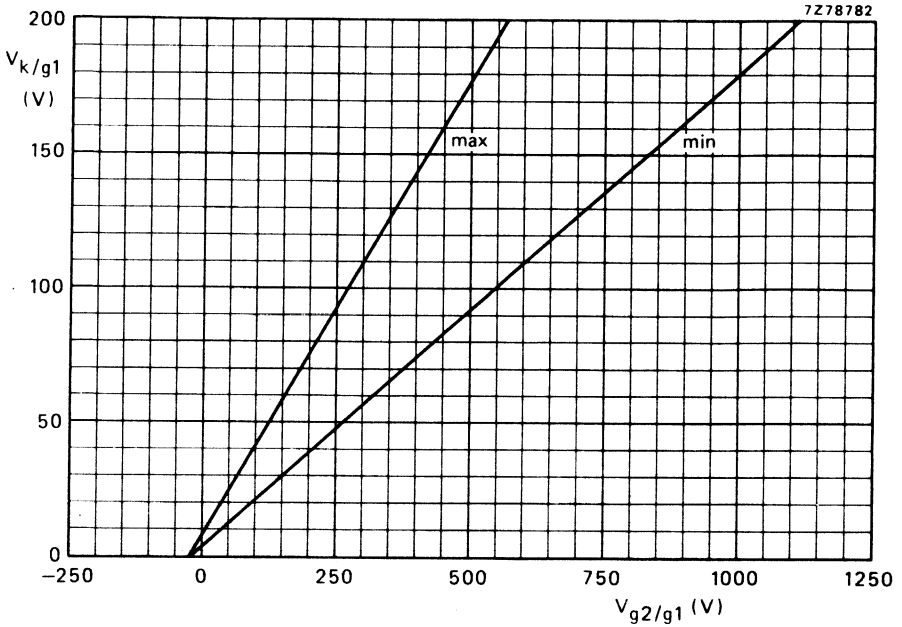

Spot cut-off design chart (cathode drive), V_{g3} adjusted for focus, $V_{a,g4}$ = 20 to 27,5 kV,

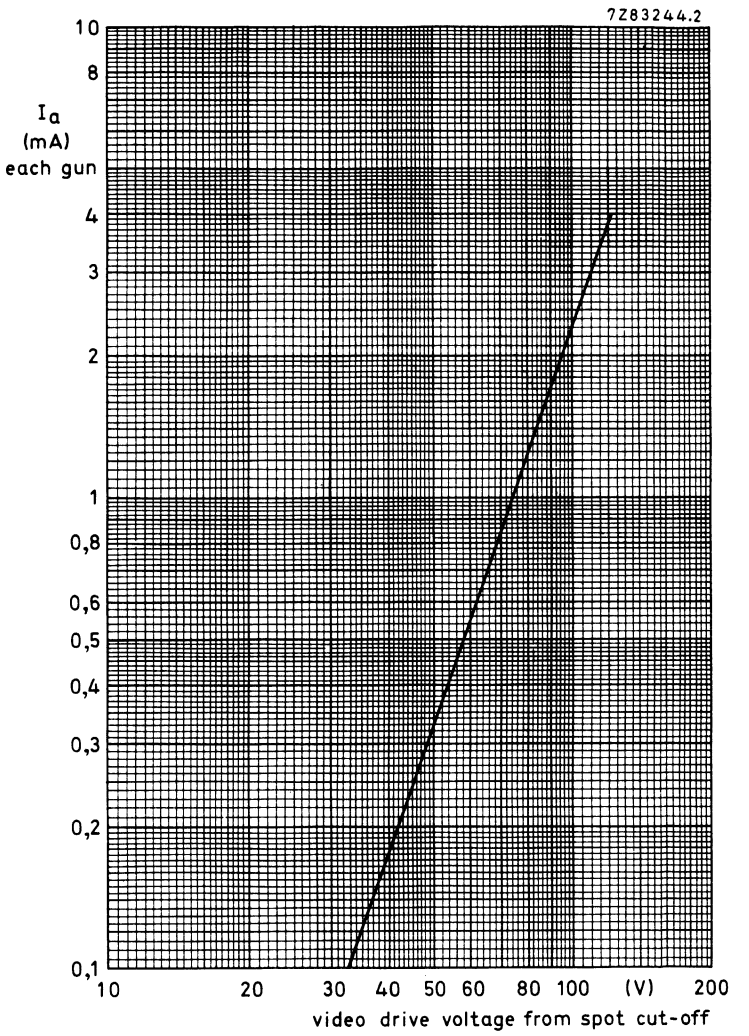

Typical cathode drive characteristics.

V_f = 6,3 V;

$V_{a,g4}$ = 25 kV;

V_{g3} adjusted for focus;

V_{g2} adjusted to provide spot cut-off for V_K = 140 V.

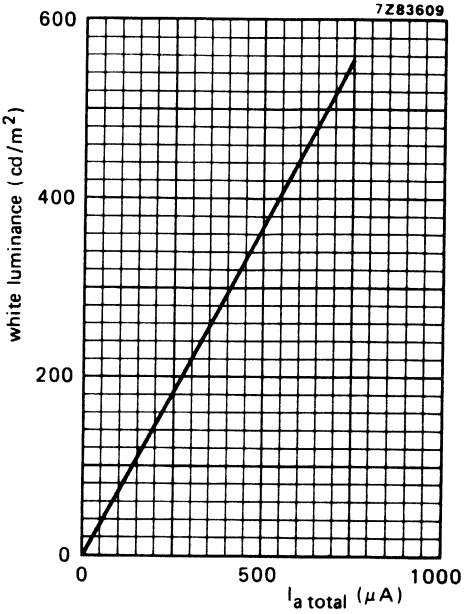

Luminance at the centre of the screen as a function of I_{total}.
$V_{a,g4}$ = 25 kV, V_f = 6,3 V, V_{g3} adjusted for optimum focus.
Scanned area = 280,8 mm x 210,6 mm;
CIE co-ordinates x = 0,313, y = 0,329.

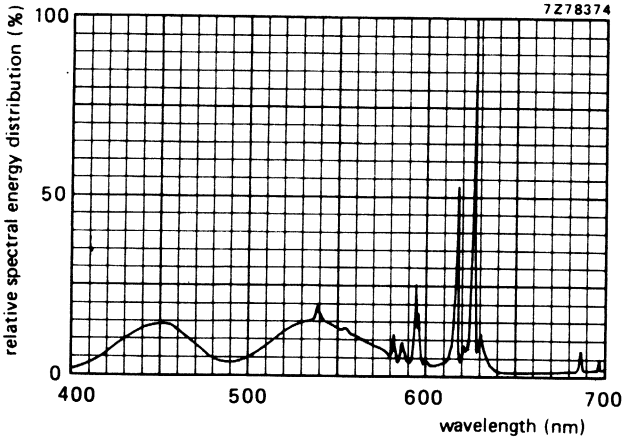

Simultaneous excitation of red, green and blue phosphor, measured in a tube, to produce white of x = 0,313, y = 0,329. Exact shape of the peaks depends on the resolution of the measuring apparatus.

Colour co-ordinates:	x	y
red	0,635	0,340
green	0,315	0,600
blue	0,150	0,060

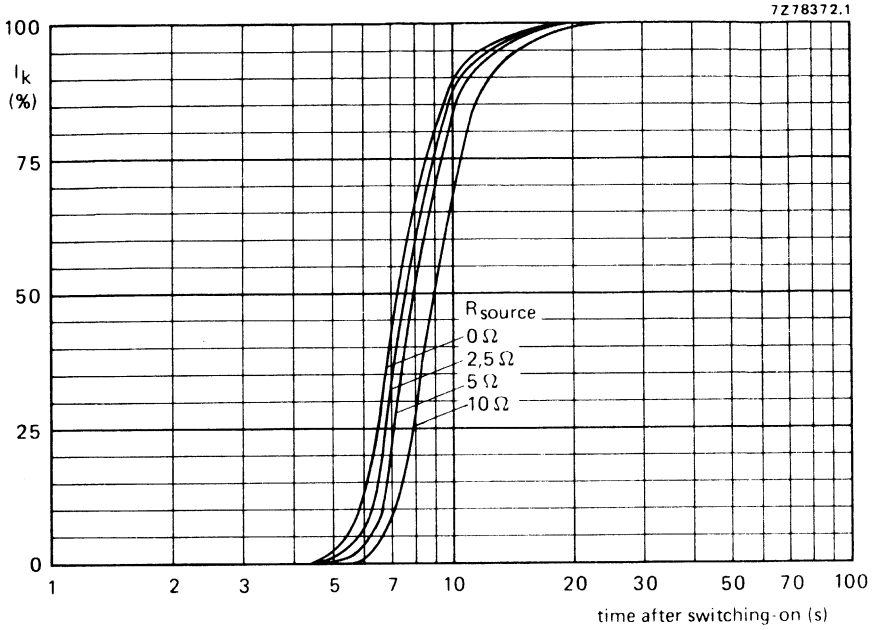

Cathode heating time after switching on, measured under typical operating conditions.

DEGAUSSING

The picture tube is provided with an internal magnetic shield. This shield and the shadow mask with its suspension system may be provided with an automatic degaussing system, consisting of one magnetic coil winding mounted on the cone of the picture tube.

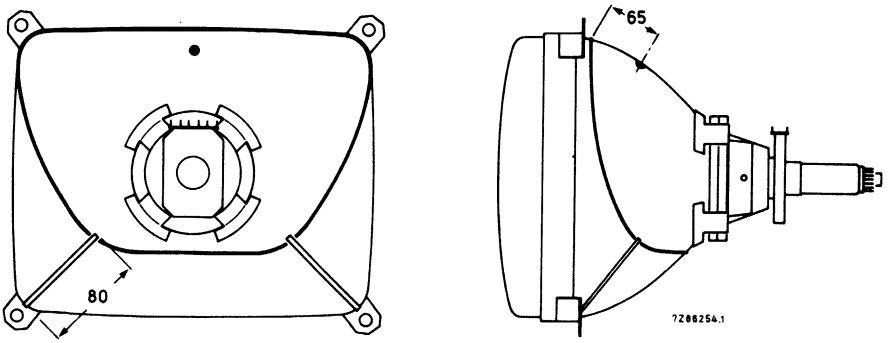

Position of degaussing coil on the picture tube; dimensions are given in mm.

For proper degaussing an initial magnetomotive force (m.m.f.) of 600 ampere-turns is required in the coil. This m.m.f. has to be gradually decreased by appropriate degaussing circuitry. In the steady state, no significant m.m.f. should remain in the coil ($\leqslant$ 0,6 ampere-turns). If single-phase power rectification is employed in the t.v. circuitry, provision should be included to prevent asymmetric distortion of the a.c. voltage applied to the degaussing circuit due to high d.c. inrush currents. An example of a degaussing circuit and coil data for various mains voltages are given below.

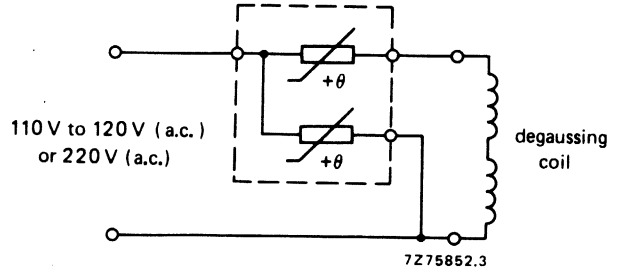

Degaussing circuit using dual PTC thermistor.

Data of degaussing coil

	110 V (a.c.) mains	220 V (a.c.) mains
Circumference	90 cm	90 cm
Number of turns	70	120
Copper-wire diameter	0,45 mm	0,3 mm
Resistance	6,7 Ω	25,9 Ω
Catalogue number of appropriate dual PTC thermistor	8222 298 73091	2322 662 98009

DEFLECTION UNIT

- **Raster Correction Free**

QUICK REFERENCE DATA

Picture tube		
gun arrangement	in line	
diagonal	37	cm (14 in)
neck diameter	29,1	mm
Deflection angle	90°	
Line deflection current, edge to edge at 25 kV	3,21	A(p-p)
Inductance of line coils, parallel connected	1,78	mH
Field deflection current, edge to edge at 25 kV	0,97	A(p-p)
Resistance of field coils, parallel connected	11	Ω

APPLICATION

This deflection unit, in conjunction with devices for colour purity and static convergence is for 90° in-line colour picture tube A37-590X, with a neck diameter of 29,1 mm.
The unit requires no raster correction circuitry.

DESCRIPTION

The deflection unit consists of saddle-shaped line deflection coils, toroidal wound field deflection coils, and metal fins, thus forming a raster correction free hybrid yoke. The unit has a metal non-magnetic clamping ring at the rear, to fix the deflection unit on the neck of the picture tube.

MECHANICAL DATA

Dimensions in mm

Outlines

The deflection unit fits a tube with a neck diameter of 29,1 $^{+0,9}_{-0,7}$ mm.

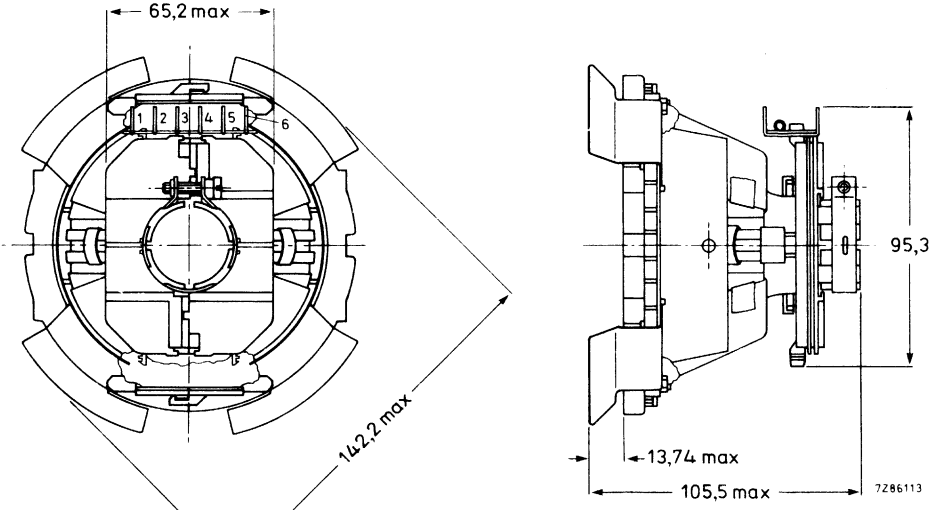

Fig. 1.

Maximum operating temperature (average copper temperature measured with resistance method)	+90 °C
Storage temperature range	−20 to +90 °C
Flame retardent	according to UL 1413, category 94-V1
Torque on neck clamp screw	1,4 Nm

ENVIRONMENTAL TEST SPECIFICATIONS

Vibration	IEC 68-2-6 (test Fc)
Bump	IEC 68-2-29 (test Eb; 35g)
Cold	IEC 68-2-1 (test Ab)
Dry heat	IEC 68-2-2 (test Bb)
Damp heat, steady state	IEC 68-2-3 (test Ca)
Cyclic damp heat	IEC 68-2-30 (test Db)
Change of temperature	IEC 68-2-14 (test Nb)

ELECTRICAL DATA

Line coils	parallel connected
Inductance at 1 V (r.m.s.), 1 kHz	1,78 mH ± 5%
Resistance at 25 °C	1,80 Ω ± 10%
Magnetic flux at 25 kV	5,59 mWb ± 2,5%
Line deflection current, edge to edge, at 25 kV	3,21 A (p-p)
Voltage during line scan, edge to edge, at 25 kV, scan period 52,5 μs	109 V
Field coils	parallel connected
Inductance at 1 V (r.m.s.), 1 kHz	29,1 mH ± 10%
Resistance at 25 °C	11 Ω ± 7%
Field deflection current, edge to edge, at 25 kV	0,97 A (p-p)
Cross-talk	a voltage of 10 V, 15625 Hz applied to the line coils causes no more than 0,2 V across the field coils (damping resistors included)
Insulation resistance at 1 kV (d.c.)	
between line and field coils	> 500 MΩ
between line coil and core clamp	> 500 MΩ
between field coil and core clamp	> 10 MΩ

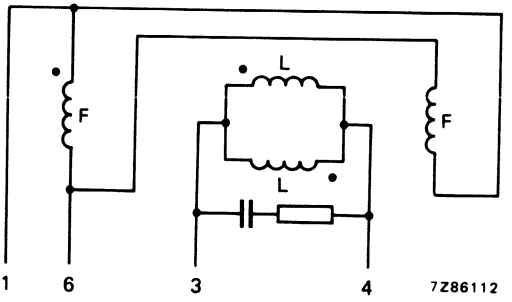

Fig. 2 Connection diagram, L = Line, F = Field.

ADJUSTMENT

- Adjust the static convergence with the four and six-pole magnets of the multipole unit AT1052 for the relative movement of the beams under influence of a four or six-pole magnet.
- Adjust colour purity by axial movement of the deflection yoke and adjustment of the two-pole magnets for centring of the beams.
- Tighten the screw of the clamping ring on the deflection yoke to secure the axial position of the unit on the picture tube.
- Readjust, if necessary, the convergence with the four and six-pole magnets.
- Tilt the unit in either horizontal or vertical direction, or in both directions so that blue, green and red lines converge at the end of the horizontal and vertical axis.
- This position of the unit has to be secured by three rubber wedges placed between the picture tube and the deflection unit. These wedges have to be cemented on to the picture tube.

Hi-Bri COLOUR PICTURE TUBE

- 90° deflection
- In-line gun, thermally stable; electrostatic hi-bi potential focus
- 29,1 mm neck diameter
- Hi-Bri screen with pigmented phosphor featuring high brightness and increased contrast performance
- Soft-Flash technology offering improved set reliability
- Slotted shadow mask optimized for minimum moiré
- Fine pitch over entire screen
- Phosphor lines follow glass contour
- Quick-heating cathodes
- Internal magnetic shield
- Reinforced envelope for push-through mounting
- When combined with an appropriate hybrid saddle toroidal deflection unit (e.g. AT1206), it forms a self-converging and raster correction free assembly.

QUICK REFERENCE DATA

Deflection angle	90°
Face diagonal	37 cm
Overall length	346,5 mm
Neck diameter	29,1 mm
Heating	6,3 V, 685 mA
Focusing voltage	28% of anode voltage

ELECTRON-OPTICAL DATA

Electron gun system		unitized triple-aperture electrodes
Focusing method		electrostatic
Focus lens		hi-bi-potential
Deflection method		magnetic
Deflection angles		
diagonal		approx. 90°
horizontal		approx. 78°
vertical		approx. 60°

ELECTRICAL DATA

Capacitances		
anode to external conductive coating including rimband	$C_{a(m+m')}$	max. 1600 pF min. 800 pF
grid 1 to all other electrodes	C_{g1}	17 pF
cathode of each gun to all other electrodes	C_{kR}, C_{kG}, C_{kB}	5 pF
focusing electrode to all other electrodes	C_{g3}	6 pF
Heating		indirect by a.c. or d.c.
heater voltage	V_f	6,3 V
heater current	I_f	685 mA

OPTICAL DATA

Screen	metal-backed vertical phosphor stripes; phosphor lines follow glass contour
Screen finish	satinized
Useful screen dimensions	
diagonal	min. 335,4 mm
horizontal axis	min. 280,8 mm
vertical axis	min. 210,6 mm
area	min. 580 cm^2
Phosphors	
red	pigmented europium activated rare earth
green	sulphide type
blue	pigmented sulphide type
Centre-to-centre distance of vertical identical colour phosphor stripes, at screen centre	0,65 mm
Light transmission of face glass at centre	68%

MECHANICAL DATA (see also the figures on the following pages)

Overall length	346,5 ± 5 mm
Neck diameter	$29{,}1\ ^{+1{,}4}_{-0{,}7}$ mm*
Bulb dimensions	
diagonal	max. 368 mm
width	max. 317 mm
height	max. 248 mm
Base	JEDEC B8-274
Anode contact	small cavity contact J1-21, IEC 67-III-2
Mounting position	anode contact on top
Net mass	approx. 6 kg

Handling

During shipment and handling the tube should not be subjected to accelerations greater than 35 g in any direction.

* In the region of 70 mm from the neck end, the maximum diameter is 30 mm.

MECHANICAL DATA

Dimensions in mm

Notes are given after the drawings.

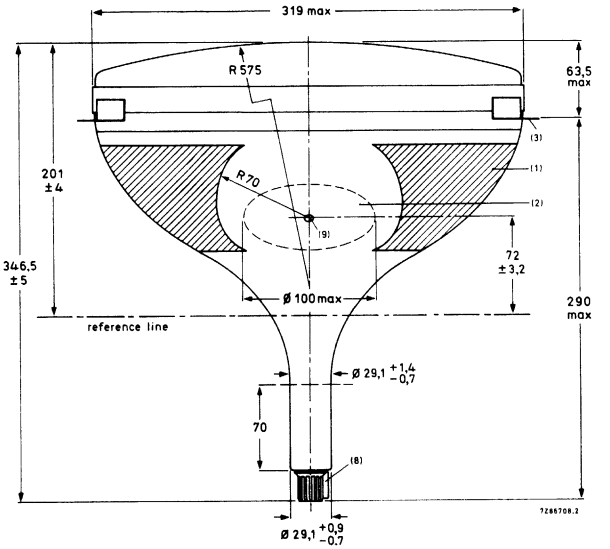

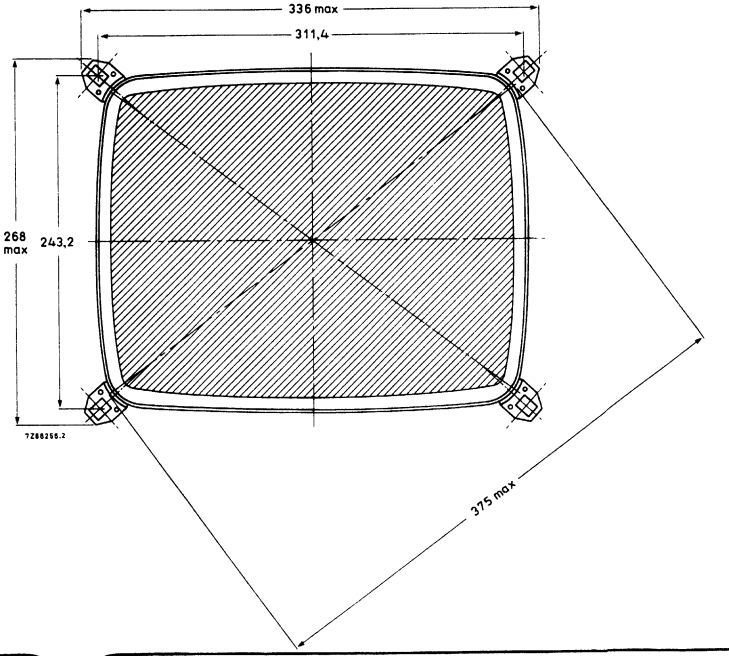

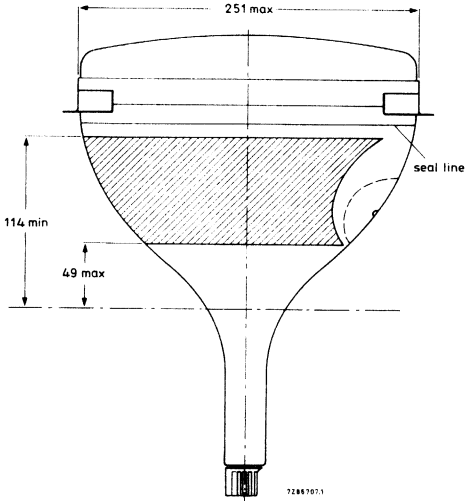
251 max
seal line
114 min
49 max
7286707.1

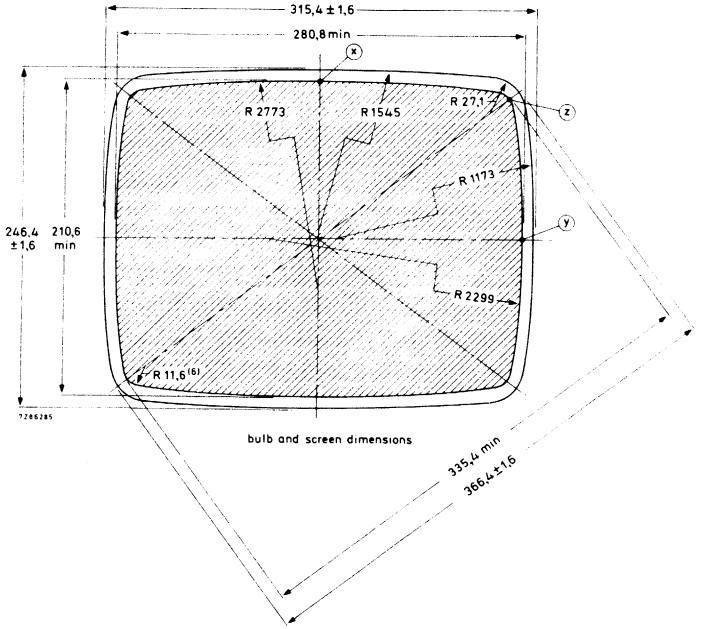
315,4 ± 1,6
280,8 min
x
R 2773
R 1545
R 27,1
z
R 1173
y
246,4 ±1,6
210,6 min
R 2299
R 11,6 (6)
7286285
bulb and screen dimensions
335,4 min
366,4 ± 1,6

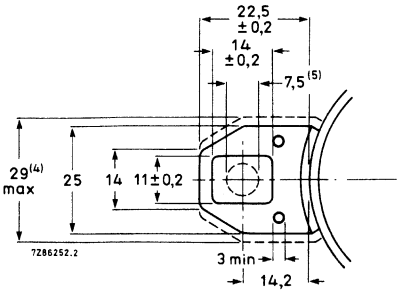
22,5
±0,2
14
±0,2
7,5(5)
29(4)
max
25
14
11±0,2
3 min
14,2
7Z86252.2

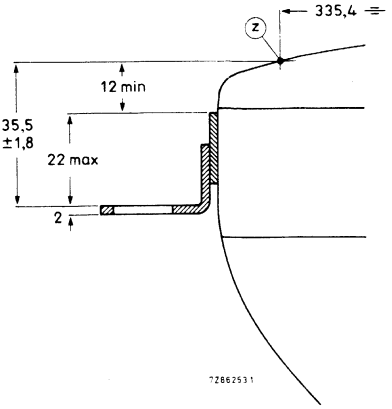
335,4
z
12 min
35,5
±1,8
22 max
2
7Z86253.1

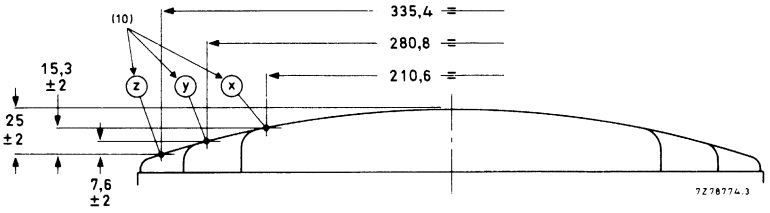
(10)
335,4
280,8
210,6
15,3
±2
z
y
x
25
±2
7,6
±2
7Z78774.3

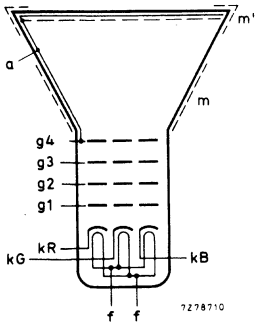
m'
a
m
g4
g3
g2
g1
kR
kG
kB
f
f
7Z78710

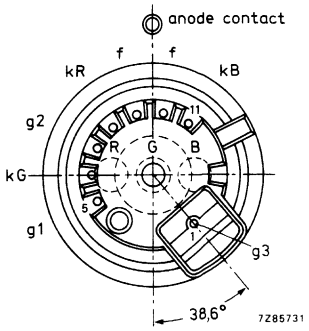
anode contact
f
f
kR
kB
g2
kG
g1
11
R
G
B
5
1
g3
38,6°
7Z85731

Notes to outline drawings on the preceding pages

1. Configuration of outer conductive coating may be different, but will contain the contact area as shown in the drawing.
2. To clean this area, wipe only with a soft lintless cloth.
3. One of the four mounting lugs may deviate (1,5 mm max.) from the plane of the other three lugs. This deviation is incorporated in the tolerance of ± 1,8 mm.
4. Minimum space to be reserved for mounting lug.
5. The position of the mounting screw in the cabinet must be within a circle of 7,5 mm diameter drawn around the true geometrical positions, i.e. the corners of a rectangle of 311,4 mm x 243,2 mm.
6. Co-ordinates for radius R = 11,6 mm: x = 126,98 mm, y = 90,76 mm.
7. Not applicable.
8. The socket for this base should not be rigidly mounted; it should have flexible leads and be allowed to move freely. After mounting of the tube in the cabinet note that the position of the base can fall within a circle, having a diameter of max. 50 mm, concentric with an imaginary tube axis. The mass of the mating socket with circuitry should not be more than 150 g, maximum permissible torque is 40 mNm.
9. Small cavity contact J1-21, IEC67-III-2.
10. The X, Y and Z reference points are located on the outside surface of the face plate at the intersection of the minor, major and diagonal screen axis respectively, with the minimum published screen.

Reference line gauge; GR90CJ4

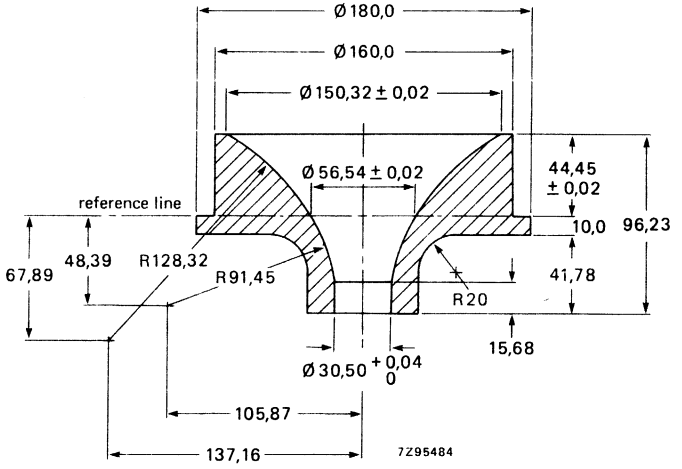

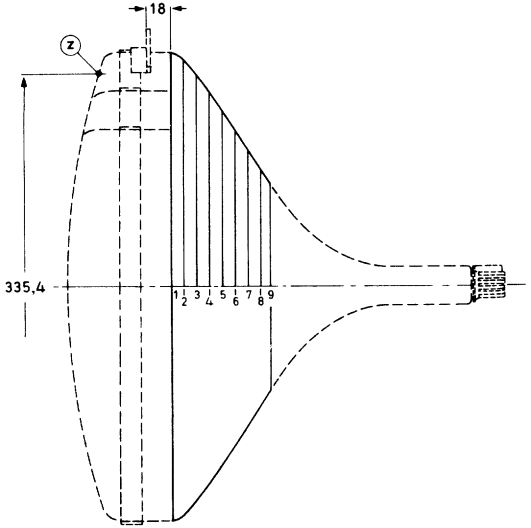

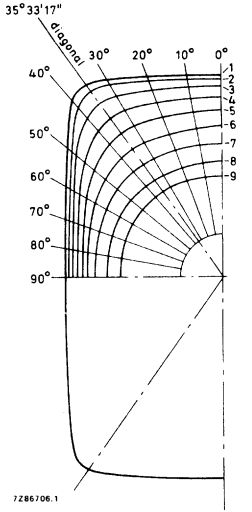

section	nom. distance from section 1	distance from centre (max. values)														
		0°	10°	20°	25°	30°	32° 30'	diag. axes	37° 30'	40°	45°	50°	60°	70°	80°	90°
1	0	157,2	159,4	166,3	171,7	178,2	181,2	183,6	183,3	180,0	167,9	156,5	140,0	129,8	124,2	122,4
2	10	154,7	156,9	163,5	168,5	174,1	176,6	178,1	177,7	174,8	164,4	153,7	137,8	127,9	122,4	120,7
3	20	148,8	150,7	156,3	160,0	163,5	164,6	165,0	164,4	162,6	156,0	147,7	133,6	124,4	119,3	117,7
4	30	140,4	142,1	146,2	148,6	150,5	151,0	151,1	150,7	149,6	145,6	140,0	128,6	120,3	115,7	114,2
5	40	130,3	131,3	134,0	135,4	136,5	136,8	136,8	136,6	136,1	134,1	130,8	122,7	115,9	111,7	110,3
6	50	118,2	118,8	120,1	120,9	121,6	121,8	122,0	122,0	121,9	121,2	119,8	115,4	110,5	107,0	105,8
7	60	104,9	104,7	105,1	105,5	106,0	106,2	106,5	106,7	106,9	107,1	107,0	105,6	103,1	100,8	99,8
8	70	90,6	89,9	89,8	90,0	90,4	90,6	90,9	91,1	91,4	91,9	92,3	92,5	91,7	90,4	89,7
9	77	79,9	79,1	79,0	79,1	79,4	79,6	79,9	80,1	80,4	80,9	81,4	81,8	81,4	80,5	79,9

Base JEDEC B8-274

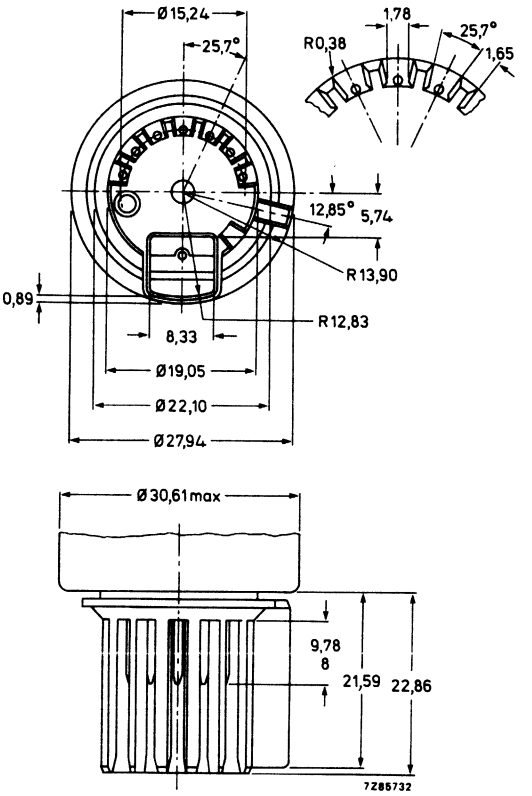

TYPICAL OPERATING CONDITIONS

The voltages are specified with respect to grid 1.

Anode voltage	$V_{a,g4}$	25 kV
Grid 3 (focusing electrode) voltage	V_{g3}	6,6 to 7,5 kV
Grid 2 voltage for a spot cut-off voltage V_K = 140 V	V_{g2}	390 to 760 V
Luminance at the centre of the screen*	L	175 cd/m²

* Tube settings adjusted to produce white of 6500K + 7 M.P.C.D. (x = 0,313, y = 0,329) focused raster, current density 0,4 μA/cm².

EQUIPMENT DESIGN VALUES

The values are valid for anode voltages between 20 and 27,5 kV.
The voltages are specified with respect to grid 1.

Grid 3 (focusing electrode) voltage	V_{g3}	26,6 to 29,8% of anode voltage
Grid 2 voltage and cathode voltage for visual extinction of focused spot	V_{g2} and V_k	see cut-off design chart *
Difference in cut-off voltages between guns in any tube	ΔV_k	lowest value $>$ 80% of highest value
Video drive characteristics		see graphs **
Grid 3 (focusing electrode) current	I_{g3}	−5 to + 5 μA
Grid 2 current	I_{g2}	−5 to + 5 μA
Grid 1 current under cut-off conditions	I_{g1}	−5 to + 5 μA

To produce white of 6500K + 7 M.P.C.D.
(CIE co-ordinates x = 0,313, y = 0,329)

Percentage of the total anode current supplied by each gun (typical)

red gun	38,3%
green gun	35,8%
blue gun	25,9%

Ratio of anode currents

red gun to green gun	min.	0,8
	average	1,1
	max.	1,4
red gun to blue gun	min.	1,1
	average	1,5
	max.	1,9
blue gun to green gun	min.	0,5
	average	0,7
	max.	0,9

* The common V_{g2} should be adjusted as follows:
Set the cathode voltage, V_k, for each gun at 150 V. Increase the V_{g2} from about 400 V to the value at which the raster of one of the guns becomes just visible. Now decrease the V_k of the remaining guns so that the rasters of these guns also become visible.

** For optimum picture performance it is recommended that the cathodes are not driven below + 10 V.

LIMITING VALUES (Design maximum rating system unless otherwise stated)

The voltages are specified with respect to grid 1.

Anode voltage	$V_{a,g4}$	max.	27,5 kV	notes 1, 2, 3
		min.	20 kV	notes 1 and 4
Long-term average current for three guns	I_a	max.	750 μA	note 5
Grid 3 (focusing electrode) voltage	V_{g3}	max.	11 kV	
Grid 2 voltage, peak	V_{g2p}	max.	1000 V	
Cathode voltage				
positive	V_k	max.	400 V	
positive operating cut-off	V_k	max.	200 V	
negative	$-V_k$	max.	0 V	
negative peak	$-V_{kp}$	max.	2 V	
Heater voltage	V_f	6,3 V	+ 5 % −10 %	notes 1 and 6
Heater-cathode voltage				
heater negative with respect to cathode				
during equipment warm-up period not exceeding 15 s	V_{kf}	max.	450 V	note 1
after equipment warm-up period	V_{kf}	max.	250 V	
heater positive with respect to cathode	$-V_{kfp}$	peak	200 V	note 1
	$-V_{kf}$	max. (d.c. component value)	0 V	

Notes

1. Absolute maximum rating system.
2. The X-ray dose rate remains below the acceptable value of 0,5 mR/h, measured with ionization chamber when the tube is used within its limiting values.
3. During adjustment on the production line this value is likely to be surpassed considerably. It is therefore strongly recommended to first make the necessary adjustments for normal operation without picture tube.
4. Operation of the tube at lower voltages impairs the luminance and resolution.
5. The short-term average anode current should be limited by circuitry to 1000 μA.
6. For maximum cathode life and optimum performance, it is recommended that the heater supply be designed for 6,3 V at zero beam current.

FLASHOVER PROTECTION

With the high voltage used with this tube (max. 27,5 kV) internal flashovers may occur. As a result of the Soft-Flash technology these flashover currents are limited to approx. 60 A offering higher set reliability, optimum circuit protection and component savings.
Primary protective circuitry using properly grounded spark gaps and series isolation resistors (preferably carbon composition) is still necessary to prevent tube damage. The spark gaps should be connected to all picture tube electrodes at the socket according to the figure below; they are not required on the heater pins. No other connections between the outer conductive coating and the chassis are permissible.
The spark gaps should be designed for a breakdown voltage at the focusing electrode (g3) of 11 kV (1,5 x V_{g3} max. at $V_{a,g4}$ = 25 kV), and at the other electrodes of 1,5 to 2 kV.
The values of the series isolation resistors should be as high as possible (min. 1,5 kΩ) without causing deterioration of the circuit performance. The resistors should be able to withstand an instantaneous surge of 20 kV for the focusing circuit and 12 kV for the remaining circuits without arcing.
Additional information is available on request.

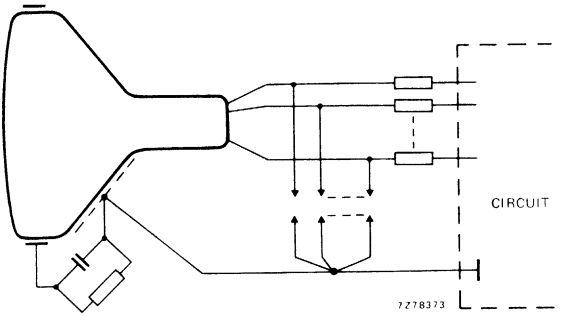

BEAM CORRECTIONS

Maximum required correction for register, as measured at the centre of the screen in any direction	0,08 mm
Centre convergence displacement of the blue and red beams is contained within a circle; max. diameter of circle	4 mm
Centre convergence displacement between the green beam and converged blue and red beams is contained within a circle; maximum diameter of circle	2 mm
Maximum centring error in any direction after colour purity, static convergence, and horizontal centre line correction, measured with deflection coils in nominal position	5 mm

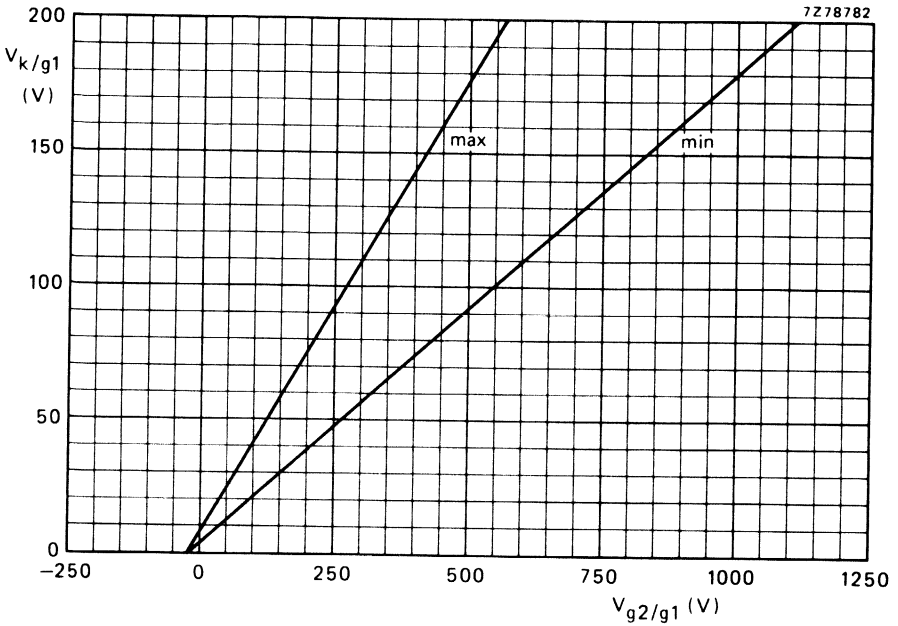

Spot cut-off design chart (cathode drive), V_{g3} adjusted for focus, $V_{a,g4}$ = 20 to 27,5 kV,

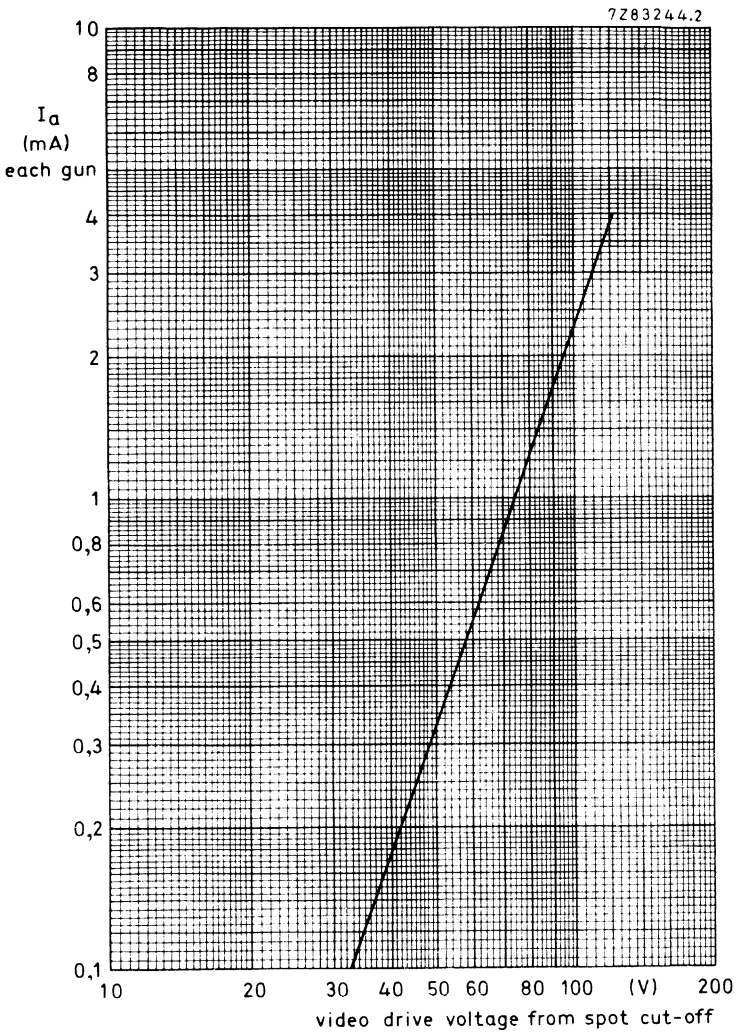

Typical cathode drive characteristics.

V_f = 6,3 V;

$V_{a,g4}$ = 25 kV;

V_{g3} adjusted for focus;

V_{g2} adjusted to provide spot cut-off for V_K = 140 V.

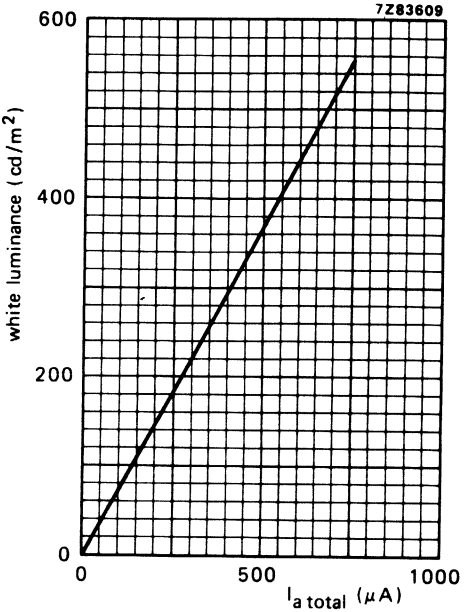

Luminance at the centre of the screen as a function of I_{total}.
$V_{a,g4}$ = 25 kV, V_f = 6,3 V, V_{g3} adjusted for optimum focus.
Scanned area = 280,8 mm x 210,6 mm;
CIE co-ordinates x = 0,313, y = 0,329.

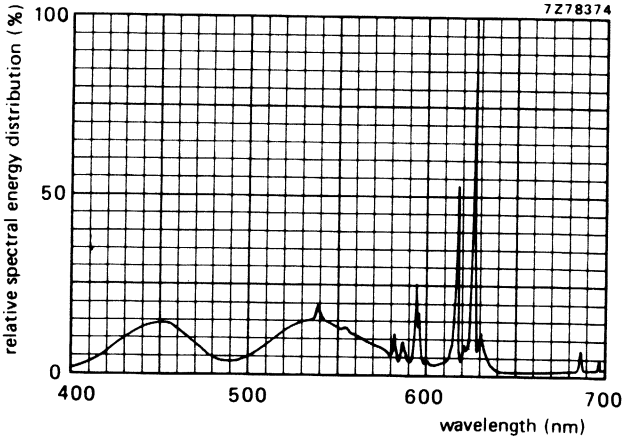

Simultaneous excitation of red, green and blue phosphor, measured in a tube, to produce white of x = 0,313, y = 0,329. Exact shape of the peaks depends on the resolution of the measuring apparatus.

Colour co-ordinates:	x	y
red	0,635	0,340
green	0,315	0,600
blue	0,150	0,060

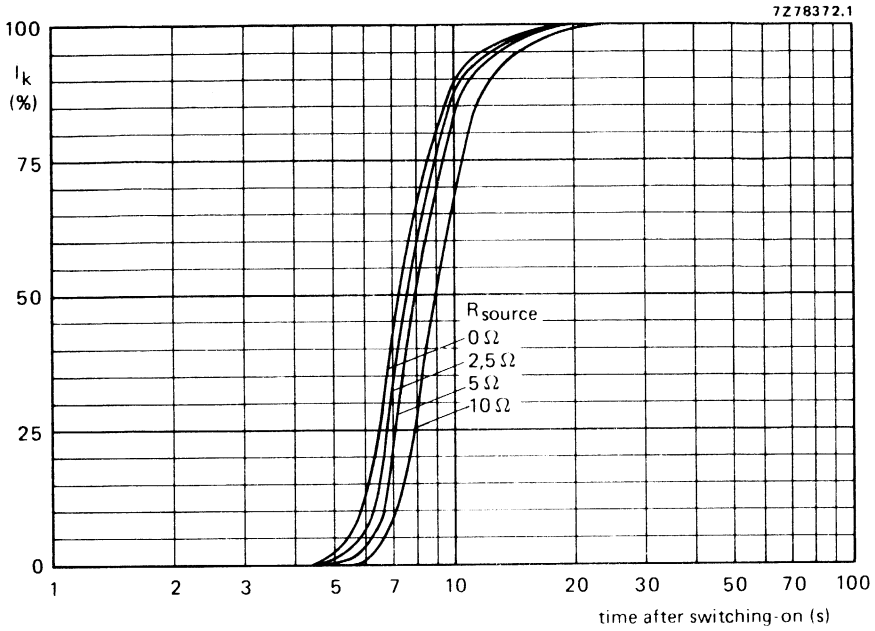

Cathode heating time after switching on, measured under typical operating conditions.

DEGAUSSING

The picture tube is provided with an internal magnetic shield. This shield and the shadow mask with its suspension system may be provided with an automatic degaussing system, consisting of one magnetic coil winding mounted on the cone of the picture tube.

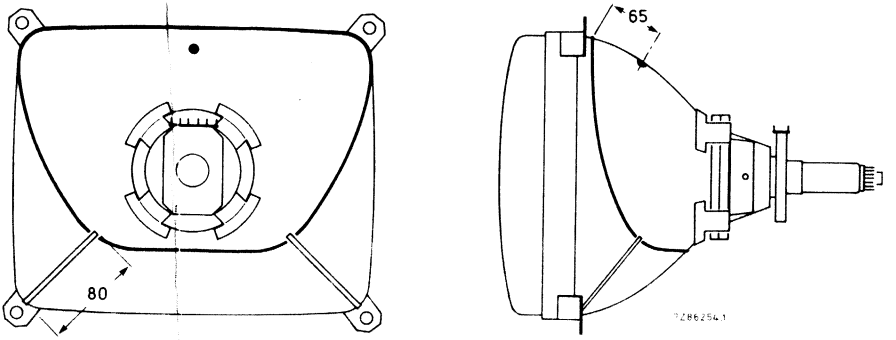

Position of degaussing coil on the picture tube; dimensions are given in mm.

For proper degaussing an initial magnetomotive force (m.m.f.) of 600 ampere-turns is required in the coil. This m.m.f. has to be gradually decreased by appropriate degaussing circuitry. In the steady state, no significant m.m.f. should remain in the coil ($\leq$ 0,6 ampere-turns). If single-phase power rectification is employed in the t.v. circuitry, provision should be included to prevent asymmetric distortion of the a.c. voltage applied to the degaussing circuit due to high d.c. inrush currents. An example of a degaussing circuit and coil data for various mains voltages are given below.

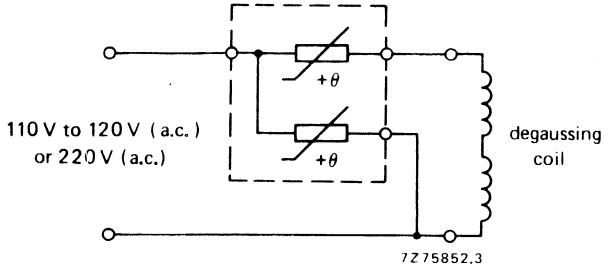

Degaussing circuit using dual PTC thermistor.

Data of degaussing coil

	110 V (a.c.) mains	220 V (a.c.) mains
Circumference	90 cm	90 cm
Number of turns	70	120
Copper-wire diameter	0,45 mm	0,3 mm
Resistance	6,7 Ω	25,9 Ω
Catalogue number of appropriate dual PTC thermistor	8222 298 73091	2322 662 98009

DEFLECTION UNIT

- **Raster Correction Free**

QUICK REFERENCE DATA

Picture tube	
gun arrangement	in line
diagonal	37 cm (14 in)
neck diameter	29,1 mm
Deflection angle	90°
Line deflection current, edge to edge at 25 kV	3,19 A(p-p)
Inductance of line coils, parallel connected	1,78 mH
Field deflection current, edge to edge at 25 kV	0,97 A(p-p)
Resistance of field coils, parallel connected	11 Ω

APPLICATION

This deflection unit, in conjunction with devices for colour purity and static convergence is for 90° in-line colour picture tubes A37-590X and A37-591X, with a neck diameter of 29,1 mm.
The unit requires no raster correction circuitry.

DESCRIPTION

The deflection unit consists of saddle-shaped line deflection coils, toroidal wound field deflection coils, and metal fins, thus forming a raster correction free hybrid yoke. The unit has a metal non-magnetic clamping ring at the rear, to fix the deflection unit on the neck of the picture tube.

MECHANICAL DATA

Dimensions in mm

Outlines

The deflection unit fits a tube with a neck diameter of $29{,}1\ ^{+0{,}9}_{-0{,}7}$ mm.

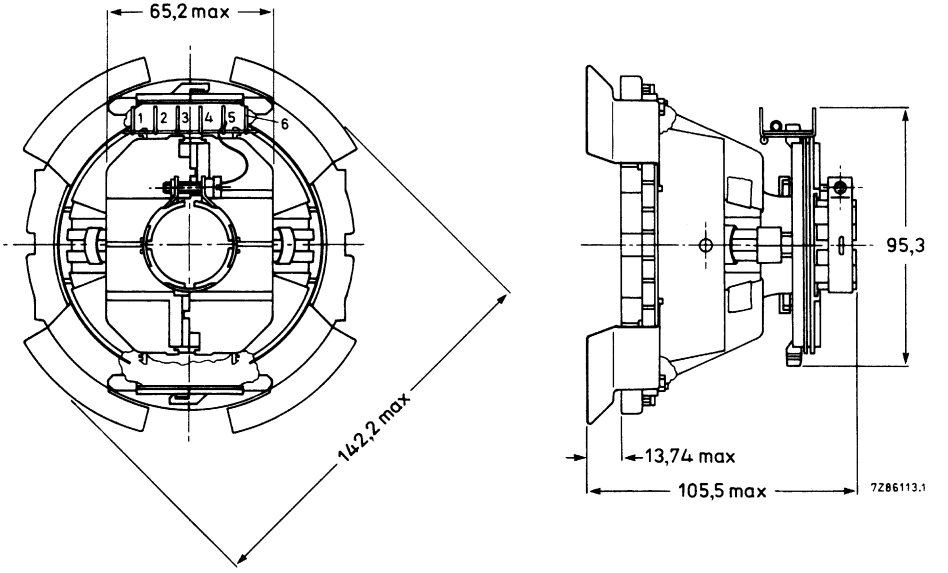

Fig. 1.

Maximum operating temperature (average copper temperature measured with resistance method)	+ 90 °C
Storage temperature range	−20 to + 90 °C
Flame retardent	according to UL 1413, category 94-V1
Torque on neck clamp screw	1,4 Nm

ENVIRONMENTAL TEST SPECIFICATIONS

Vibration	IEC 68-2-6 (test Fc)
Bump	IEC 68-2-29 (test Eb; 35g)
Cold	IEC 68-2-1 (test Ab)
Dry heat	IEC 68-2-2 (test Bb)
Damp heat, steady state	IEC 68-2-3 (test Ca)
Cyclic damp heat	IEC 68-2-30 (test Db)
Change of temperature	IEC 68-2-14 (test Nb)

ELECTRICAL DATA

Line coils	parallel connected
Inductance at 1 V (r.m.s.), 1 kHz	1,78 mH ± 5%
Resistance at 25 °C	1,82 Ω ± 10%
Line deflection current, edge to edge, at 25 kV	3,19 A (p-p)
Voltage during line scan, edge to edge, at 25 kV, scan period 52,5 μs	108 V
Field coils	parallel connected
Inductance at 1 V (r.m.s.), 1 kHz	29,1 mH ± 10%
Resistance at 25 °C	11 Ω ± 7%
Field deflection current, edge to edge, at 25 kV	0,97 A (p-p)
Cross-talk	a voltage of 10 V, 15625 Hz applied to the line coils causes no more than 0,2 V across the field coils (damping resistors included)
Insulation resistance at 1 kV (d.c.)	
between line and field coils	> 500 MΩ
between line coil and core clamp	> 500 MΩ
between field coil and core clamp	> 10 MΩ

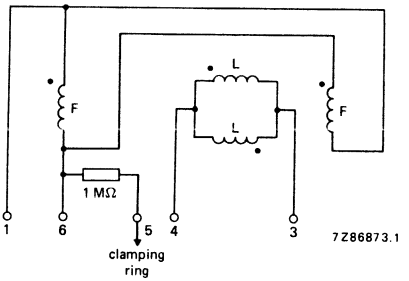

Fig. 2 Connection diagram, L = Line, F = Field.

ADJUSTMENT

- Adjust the static convergence with the four and six-pole magnets of the multipole unit AT1052 for the relative movement of the beams under influence of a four or six-pole magnet.
- Adjust colour purity by axial movement of the deflection yoke and adjustment of the two-pole magnets for centring of the beams.
- Tighten the screw of the clamping ring on the deflection yoke to secure the axial position of the unit on the picture tube.
- Readjust, if necessary, the convergence with the four and six-pole magnets.
- Tilt the unit in either horizontal or vertical direction, or in both directions so that blue, green and red lines converge at the end of the horizontal and vertical axis.
- This position of the unit has to be secured by three rubber wedges placed between the picture tube and the deflection unit. These wedges have to be cemented on to the picture tube.

Hi-Bri COLOUR PICTURE TUBE ASSEMBLIES

- The tube characteristics are identical to those of type A37-590X, see the relevant data sheet.
- Assembly A37-598X0620 consists of a picture tube with a light transmission at screen centre of 68%, and deflection unit AT1206/20.
  Assembly A37-599X0620 consists of a picture tube with a light transmission at screen centre of 46%, and deflection unit AT1206/20.
- Enhanced convergence is obtained by improved and refined matching method.

CONVERGENCE AND RASTER SPECIFICATION

The maximum convergence after 15 min operation is given in Table 1 and Fig. 1.

Test conditions (all voltages are measured with respect to grid 1)

Heater voltage	V_f	6,3 V
Cathode voltage	V_k	to be adjusted for correct current setting
Grid 2 voltage	V_{g2}	585 V
Grid 3 voltage	V_{g3}	to be adjusted for focus in half east and half west, using a cross-hatch pattern, when the beam current (black background) is adjusted to 5 mA(p-p) for white
Anode voltage	V_a	25 kV
Test pattern		cross-hatch pattern (350 μA (p-p) for each gun)

Remarks

1. Misconvergence is the distance between centres of the red, green, blue lines at the screen using rectangular co-ordinates.
2. Anode and/or focusing voltage affect the static convergence performance. If the voltages are not the same as the test conditions mentioned, a minor convergence adjustment may become necessary. This can be done by readjusting the static convergence magnets.

Table 1 Maximum misconvergence after 15 min operation

location (see Fig. 1)	max. error between any colour
A	0,3 mm
B, C, D, E	0,7 mm
F, G, H, J	0,9 mm
K, L, M, N	0,8 mm
S, T, U, V	0,6 mm

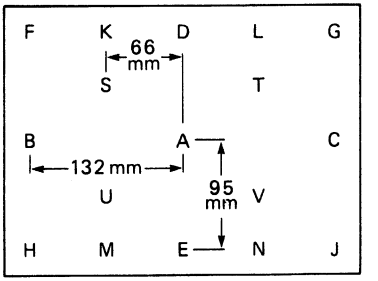

Fig. 1 Convergence test areas. Diameter of test circles at measuring points = 10 mm.

Raster centring in any direction	max. 5 mm
Raster rotation, tube facing east	max. 2,5 mm (see Fig. 2)

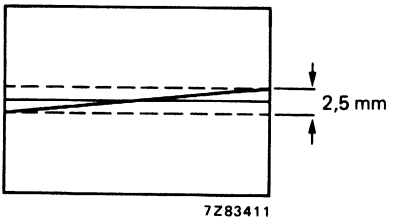

Fig. 2 Raster rotation.

Total pattern distortion, measured without east-west and north-south correction

East-west pattern distortion (H_1 and/or H_2, Fig. 3)	max. 3 mm
North-south pattern distortion (V_1 and/or V_2, Fig. 4)	max. 2,3 mm

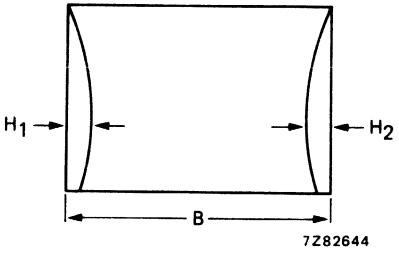

Fig. 3 East-west pattern distortion.
B = 264 mm.

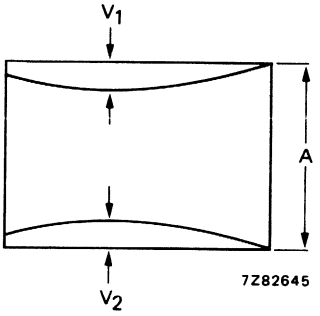

Fig. 4 North-south pattern distortion.
A = 190 mm.

DEFLECTION UNIT

- **Raster Correction Free**

QUICK REFERENCE DATA

Picture tube		
gun arrangement	in line	
diagonal	37	cm (14 in)
neck diameter	29,1	mm
Deflection angle	90°	
Line deflection current, edge to edge at 25 kV	3,21	A(p-p)
Inductance of line coils, parallel connected	1,78	mH
Field deflection current, edge to edge at 25 kV	0,97	A(p-p)
Resistance of field coils, parallel connected	11	Ω

APPLICATION

This deflection unit, in conjunction with devices for colour purity and static convergence is for 90° in-line colour picture tube A37-590X, with a neck diameter of 29,1 mm.
The unit requires no raster correction circuitry.

DESCRIPTION

The deflection unit consists of saddle-shaped line deflection coils, toroidal wound field deflection coils, and metal fins, thus forming a raster correction free hybrid yoke. The unit has a metal non-magnetic clamping ring at the rear, to fix the deflection unit on the neck of the picture tube.

MECHANICAL DATA

Dimensions in mm

Outlines

The deflection unit fits a tube with a neck diameter of $29{,}1\ ^{+0{,}9}_{-0{,}7}$ mm.

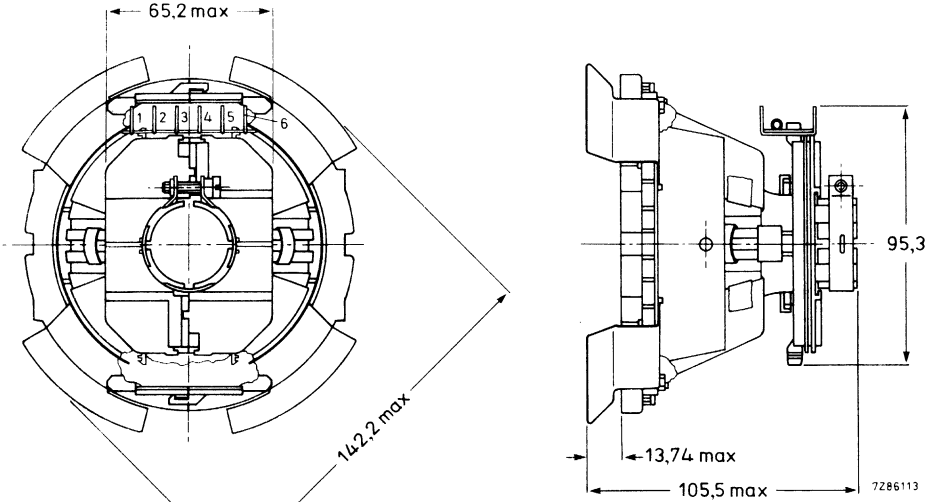

Fig. 1.

Maximum operating temperature (average copper temperature measured with resistance method)	+90 °C
Storage temperature range	−20 to +90 °C
Flame retardent	according to UL 1413, category 94-V1
Torque on neck clamp screw	1,4 Nm

ENVIRONMENTAL TEST SPECIFICATIONS

Vibration	IEC 68-2-6 (test Fc)
Bump	IEC 68-2-29 (test Eb; 35g)
Cold	IEC 68-2-1 (test Ab)
Dry heat	IEC 68-2-2 (test Bb)
Damp heat, steady state	IEC 68-2-3 (test Ca)
Cyclic damp heat	IEC 68-2-30 (test Db)
Change of temperature	IEC 68-2-14 (test Nb)

ELECTRICAL DATA

Line coils	parallel connected
Inductance at 1 V (r.m.s.), 1 kHz	1,78 mH ± 5%
Resistance at 25 °C	1,80 Ω ± 10%
Magnetic flux at 25 kV	5,59 mWb ± 2,5%
Line deflection current, edge to edge, at 25 kV	3,21 A (p-p)
Voltage during line scan, edge to edge, at 25 kV, scan period 52,5 μs	109 V
Field coils	parallel connected
Inductance at 1 V (r.m.s.), 1 kHz	29,1 mH ± 10%
Resistance at 25 °C	11 Ω ± 7%
Field deflection current, edge to edge, at 25 kV	0,97 A (p-p)
Cross-talk	a voltage of 10 V, 15625 Hz applied to the line coils causes no more than 0,2 V across the field coils (damping resistors included)
Insulation resistance at 1 kV (d.c.)	
between line and field coils	> 500 MΩ
between line coil and core clamp	> 500 MΩ
between field coil and core clamp	> 10 MΩ

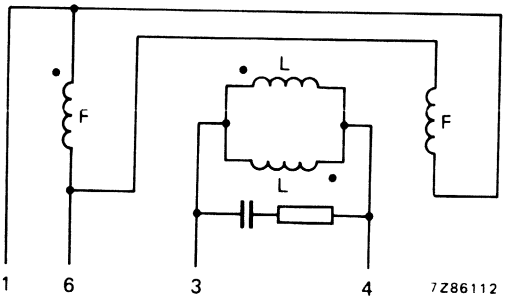

Fig. 2 Connection diagram, L = Line, F = Field.

ADJUSTMENT

- Adjust the static convergence with the four and six-pole magnets of the multipole unit AT1052 for the relative movement of the beams under influence of a four or six-pole magnet.
- Adjust colour purity by axial movement of the deflection yoke and adjustment of the two-pole magnets for centring of the beams.
- Tighten the screw of the clamping ring on the deflection yoke to secure the axial position of the unit on the picture tube.
- Readjust, if necessary, the convergence with the four and six-pole magnets.
- Tilt the unit in either horizontal or vertical direction, or in both directions so that blue, green and red lines converge at the end of the horizontal and vertical axis.
- This position of the unit has to be secured by three rubber wedges placed between the picture tube and the deflection unit. These wedges have to be cemented on to the picture tube.

Hi-Bri COLOUR PICTURE TUBE

- 90° deflection
- In-line, thermally stable hi-bi potential gun
- 22,5 mm neck diameter
- Hi-Bri technology
- Pigmented phosphors
- Slotted shadow mask optimized for minimum moiré
- Fine pitch over entire screen
- Phosphor lines follow glass contour
- Quick heating low-power cathodes
- Soft-Flash technology
- Internal magnetic shield
- Reinforced envelope for push-through mounting
- Combined with a deflection unit of the AT1635 series, it forms a self-converging and raster correction free assembly

QUICK REFERENCE DATA

Deflection angle	90°
Minimum useful screen diagonal	38 cm
Overall-length	366 mm
Neck diameter	22,5 mm
Heating	6,3 V, 300 mA
Focusing voltage	28% of anode voltage

ELECTRON-OPTICAL DATA

Electron gun system		unitized triple-aperture electrodes
Focusing method		electrostatic
Focus lens		hi-bi-potential
Deflection method		magnetic
Delfection angles		
diagonal		approx. 90°
horizontal		approx. 78°
vertical		approx. 60°

ELECTRICAL DATA

Capacitances		
anode to external conductive coating including rimband	$C_{a(m+m')}$	max. 1600 pF min. 1000 pF
grid 1 to all other electrodes	C_{g1}	15 pF
cathode of each gun to all other electrodes	C_{kR}, C_{kG}, C_{kB}	4 pF
focusing electrode to all other electrodes	C_{g3}	4 pF
Heating		indirect by a.c. or d.c.
heater voltage	V_f	6,3 V
heater current	I_f	300 mA

OPTICAL DATA

Screen	metal-backed vertical phosphor stripes; phosphor lines follow glass contour
Screen finish	satinized
Useful screen dimensions	
diagonal	min. 382,3 mm
horizontal axis	min. 322,1 mm
vertical axis	min. 241,6 mm
area	min. 755 cm^2
Phosphors	
red	pigmented europium activated rare earth
green	sulphide type
blue	pigmented sulphide type
Centre-to-centre distance of vertical identical colour phosphor stripes, at screen centre	0,70 mm
Light transmission of face glass at centre	66,8%

MECHANICAL DATA (see also the figures on the following pages)

Overall length	365,9 ± 5 mm
Neck diameter	$22{,}5\ ^{+\ 1{,}4}_{-0{,}7}$ mm*
Bulb dimensions	
diagonal	max. 418,8 mm
width	max. 360,6 mm
height	max. 281,8 mm
Base	JEDEC B8-288
Anode contact	small cavity contact J1-21, IEC 67-III-2
Mounting position	anode contact on top
Net mass	approx. 8 kg

Handling

During shipment and handling the tube should not be subjected to accelerations greater than 35g in any direction.

* In the region of 66 mm from the neck end, the maximum diameter is 23,2 mm.

MECHANICAL DATA (continued)

Notes are given after the drawings

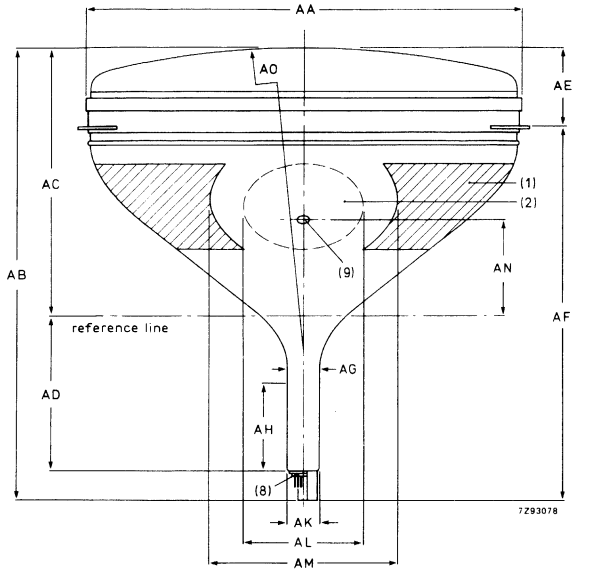

Dimensions in mm

AA	365 max
AB	370,9 max
AC	232,0 ± 4
AD	116,5 ± 1
AE	69,0 max
AF	304,0 max
AG	$22{,}5^{+\,1{,}4}_{-\,0{,}7}$
AH	66
AK	22,5 ± 0,7
AL	110 ± 10
AM	160 ± 3
AN	85,0 ± 3,2
AO	R653

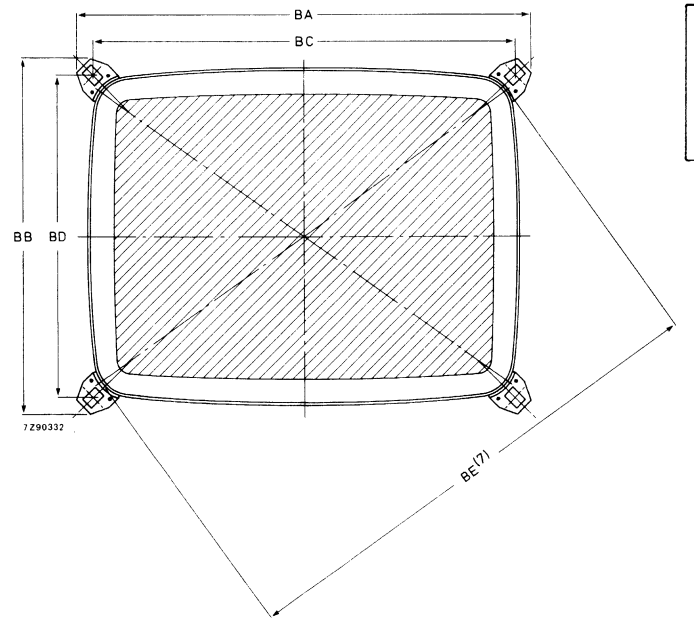

Dimensions in mm

BA	384 max
BB	305 max
BC	355,8
BD	276,7
BE	423 max

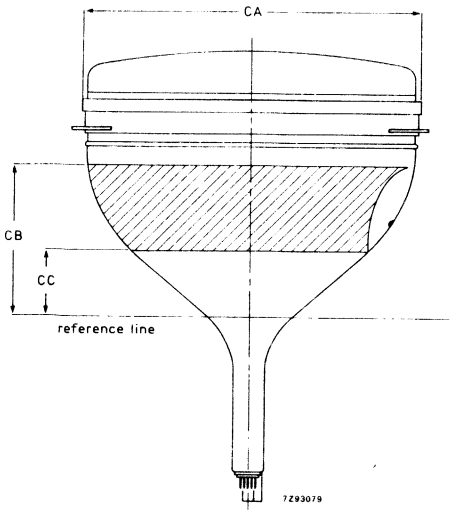

Dimensions in mm

CA	286 max
CB	126 min
CC	63 max

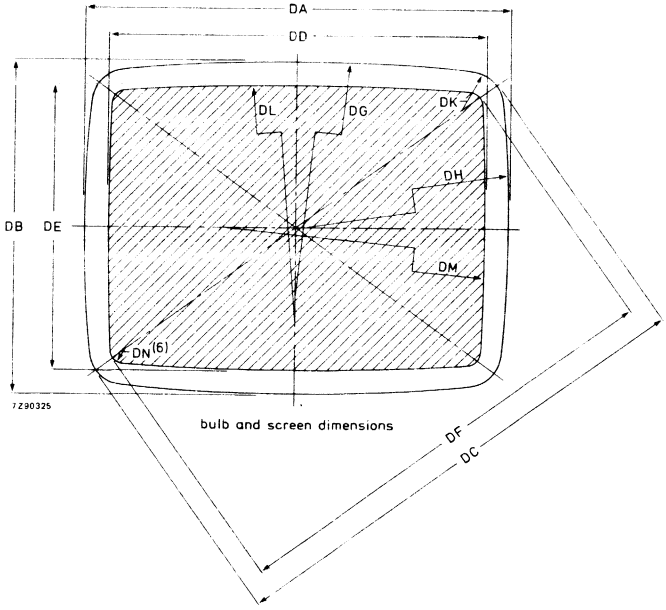

Dimensions in mm

DA	359,0 ± 1,6
DB	280,2 ± 1,6
DC	417,2 ± 1,6
DD	322,1 min
DE	241,6 min
DF	382,3 min
DG	R1592
DH	R1255
DK	R28,5
DL	R2148
DM	R1588
DN	R11,1

MECHANICAL DATA (continued)

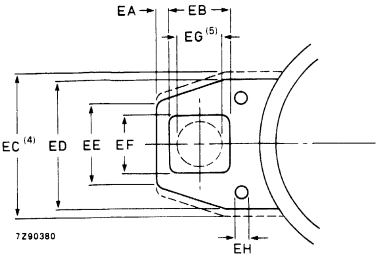

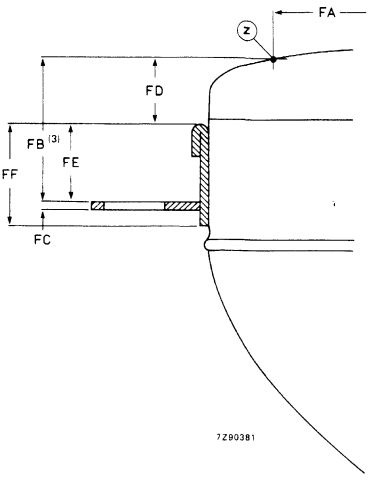

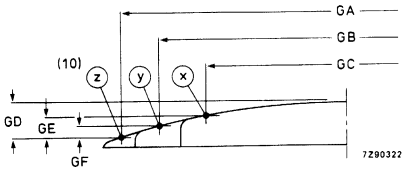

Dimensions in mm

	EA	3 min
	EB	14,5 ± 0,2
→	EC	33 max
→	ED	30 ± 1
	EE	20
	EF	14,5 ± 0,2
	EG	11,5
	EH	3,0 min

Dimensions in mm

GA	382,3
GB	322,1
GC	241,6
GD	28,6 ± 2,0
GE	17,3 ± 2,0
GF	8,4 ± 2,0

Dimensions in mm

FA	382,3
FB	37,5 ± 1,8
FC	3
FD	16 min
FE	19,5 max
FF	25 max

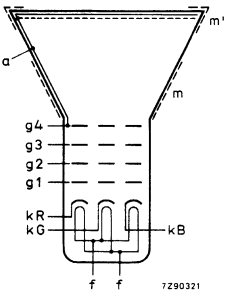

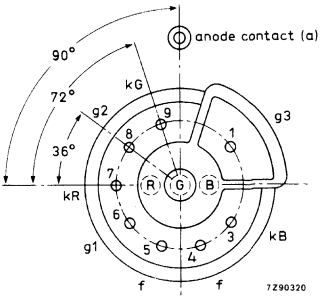

Notes to outline drawings on the preceding pages

1. Configuration of outer conductive coating may be different, but will contain the contact areas as shown in the drawing.
2. To clean this area, wipe only with a soft lintless cloth.
3. One of the four mounting lugs may deviate (1,5 mm max.) from the plane of the other three lugs. This deviation is incorporated in the tolerance of ± 1,8 mm.
4. Minimum space to be reserved for mounting lug.
5. The position of the mounting screw in the cabinet must be within a circle of 11,5 mm diamter drawn around the true geometrical positions, i.e. the corners of a rectangle of 355,8 mm x 276,7 mm.
6. Co-ordinates for radius R = 11,1 mm; x = 146,52 mm, y = 104,72 mm.
7. Maximum dimensions in plane of lugs.
8. The socket for this base should not be rigidly mounted; it should have flexible leads and be allowed to move freely. After mounting of the tube in the cabinet note that the position of the base can fall within a circle, having a diameter of max. 50 mm, concentric with an imaginary tube axis.
9. Small cavity contact J1-21, IEC 67-III-2.
10. The X, Y and Z reference points are located on the outside surface of the face plate at the intersection of the minor, major and diagonal screen axis respectively, with the minimum published screen.

Reference line gauge; G-R90CJ10

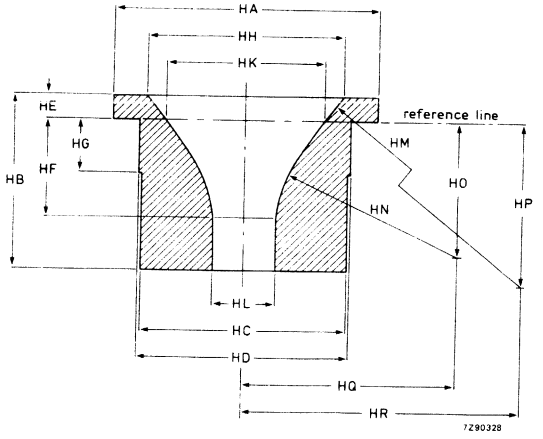

Dimensions in mm

HA	ϕ100,00
HB	65,00
HC	ϕ78,70
HD	ϕ80,00
HE	9,20 ± 0,02
HF	36,22 ± 0,02
HG	20,00
HH	ϕ75,48 ± 0,02
HK	ϕ60,77 ± 0,02
HL	$\phi 23{,}90^{+0{,}04}_{-0}$
HM	R220,00
HN	R70,00
HO	50,30
HP	132,71
HQ	80,52
HR	205,85

Maximum cone contour

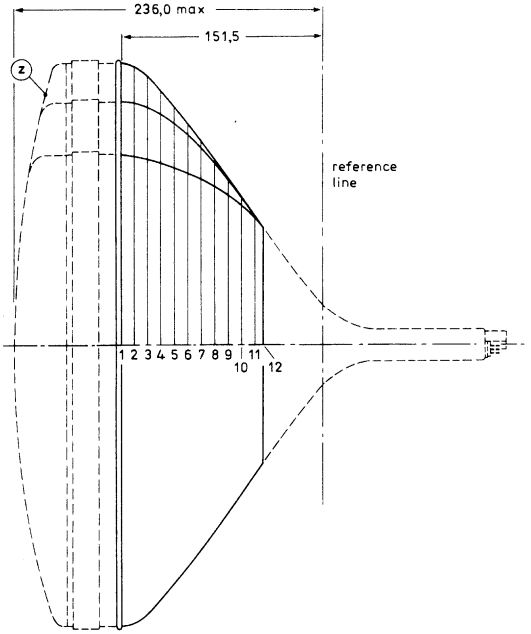

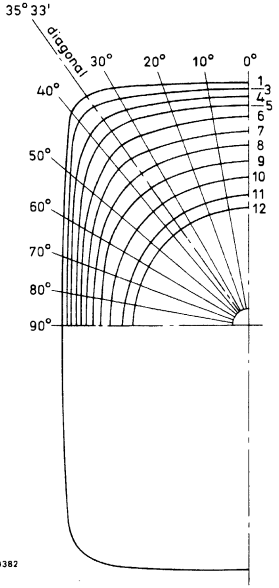

Dimensions in mm

section	nom. distance from reference line	distance from centre (max. values)															
		0°	10°	20°	25°	30°	32° 30'	diag. axes	37° 30'	40°	45°	50°	60°	70°	80°	90°
1	151,5	181,5	183,9	191,5	197,4	205,0	209,2	211,2	210,5	207,2	192,7	179,9	161,4	149,9	143,6	141,6
2	141,5	180,3	182,6	190,0	195,7	202,9	206,9	209,1	208,2	204,2	190,1	177,9	160,0	148,8	142,6	140,6
3	131,5	177,1	179,3	186,0	191,0	197,0	199,9	200,9	199,7	196,0	184,1	173,2	156,7	146,1	140,2	138,3
4	121,5	172,1	174,1	179,9	184,0	188,2	189,7	189,8	188,4	185,4	176,2	167,0	152,3	142,5	137,0	135,2
5	111,5	165,4	167,0	171,8	174,9	177,6	178,3	177,9	176,8	174,4	167,4	159,9	147,1	138,3	133,3	131,6
6	101,5	156,6	158,0	161,7	164,0	165,7	166,1	165,7	164,9	163,1	158,1	152,1	141,3	133,6	129,1	127,6
7	91,5	146,0	147,1	150,0	151,8	153,1	153,4	153,2	152,7	151,6	148,1	143,7	134,9	128,3	124,4	123,1
8	81,5	134,6	135,5	137,7	139,0	140,0	140,2	140,2	139,9	139,3	137,2	134,3	127,8	122,4	119,1	118,0
9	71,5	123,0	123,6	125,2	126,0	126,5	126,7	126,7	126,5	126,2	125,1	123,5	119,3	115,5	113,0	112,1
10	61,5	110,9	111,3	112,0	112,4	112,6	112,6	112,6	112,6	112,4	112,0	111,3	109,4	107,4	105,8	105,2
11	51,5	97,8	97,9	98,1	98,1	98,2	98,2	98,1	98,1	98,1	98,1	97,8	97,4	96,9	96,4	96,2
12	45,0	88,5	88,5	88,5	88,5	88,5	88,5	88,5	88,5	88,5	88,5	88,5	88,5	88,4	88,4	88,4

Base JEDEC B8-288

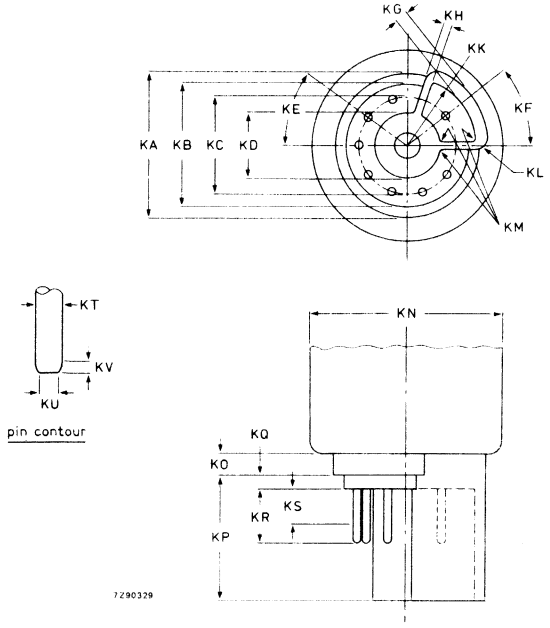

Dimensions in mm

KA	17,9 max
KB	15,4 max
KC	12,0
KD	7,9 min; 8,2 max
KE	36°
KF	38°
KG	1,3 max
KH	0,8 min; 1,0 max
KK	R8,66 ± 0,1
KL	R1,0
KM	R0,25
KN	23,2 max
KO	2,7 max
KP	15,4 ± 0,2
KQ	1,6 max
KR	6,85 max
KS	4,5 min
KT	1,016 ± 0,076
KU	0,63 max
KV	0,4 min

TYPICAL OPERATING CONDITIONS

The voltages are specified with respect to grid 1.

Anode voltage	$V_{a,g4}$	23 kV
Grid 3 (focusing electrode) voltage	V_{g3}	6,1 to 6,9 kV
Grid 2 voltage for a spot cut-off voltage V_k = 120 V	V_{g2}	310 to 600 V
Luminance at the centre of the screen*	L	165 cd/m²

* Tube settings adjusted to produce white of 6500K + 7 M.P.C.D. (x = 0,313, y = 0,329) focused raster, current density 0,4 μA/cm².

EQUIPMENT DESIGN VALUES

The values are valid for anode voltages between 20 and 27,5 kV.
The voltages are specified with respect to grid 1.

Grid 3 (focusing electrode) voltage	V_{g3}	26,6 to 29,8% of anode voltage
Grid 2 voltage and cathode voltage for visual extinction of focused spot	V_{g2} and V_k	see cut-off design chart
Difference in cut-off voltages between guns in any tube	ΔV_k	lowest value > 80% of highest value
Video drive characteristics		see graphs
Grid 3 (focusing electrode) current	I_{g3}	−5 to + 5 μA
Grid 2 current	I_{g2}	−5 to + 5 μA
Grid 1 current under cut-off conditions	I_{g1}	−5 to + 5 μA
To produce white of 6500K + 7 M.P.C.D. (CIE co-ordinates x = 0,313, y = 0,329)		
Percentage of the total anode current supplied by each gun (typical)		
red gun		38,3%
green gun		35,8%
blue gun		25,9%
Ratio of anode currents		
red gun to green gun		min. 0,8 average 1,1 max. 1,4
red gun to blue gun		min. 1,1 average 1,5 max. 1,9
blue gun to green gun		min. 0,5 average 0,7 max. 0,9

LIMITING VALUES (Design maximum rating system unless otherwise stated)

The voltages are specified with respect to grid 1.

Anode voltage	$V_{a,g4}$	max.	27,5	kV	notes 1, 2, 3
		min.	20	kV	notes 1 and 4
Long-term average current for three guns	I_a	max.	750	μA	note 5
Grid 3 (focusing electrode) voltage	V_{g3}	max.	11	kV	
Grid 2 voltage, peak	V_{g2p}	max.	1000	V	
Cathode voltage					
positive	V_k	max.	400	V	
positive operating cut-off	V_k	max.	200	V	
negative	$-V_k$	max.	0	V	
negative peak	$-V_{kp}$	max.	2	V	
Heater voltage	V_f	6,3 V	+5 % −10 %		notes 1 and 6
Heater-cathode voltage					
heater negative with respect to cathode					
after equipment warm-up period	V_{kf}	max.	200	V	
heater positive with respect to cathode	$-V_{kfp}$	peak	200	V	note 1
	$-V_{kf}$	max. (d.c. component value)	0	V	

Notes

1. Absolute maximum rating system.
2. The X-ray dose rate remains below the acceptable value of 0,5 mR/h, measured with ionization chamber when the tube is used within its limiting values.
3. During adjustment on the production line this value is likely to be surpassed considerably. It is therefore strongly recommended to first make the necessary adjustments for normal operation without picture tube.
4. Operation of the tube at lower voltages impairs the luminance and resolution.
5. The short-term average anode current should be limited by circuitry to 1000 μA.
6. For maximum cathode life and optimum performance, it is recommended that the heater supply be designed for 6,3 V at zero beam current.

FLASHOVER PROTECTION

With the high voltage used with this tube (max. 27,5 kV) internal flashovers may occur. As a result of the Soft-Flash technology these flashover currents are limited to approx. 60 A offering higher set reliability, optimum circuit protection and component savings.

Primary protective circuitry using properly grounded spark gaps and series isolation resistors (preferably carbon composition) is still necessary to prevent tube damage. The spark gaps should be connected to all picture tube electrodes at the socket according to the figure below; they are not required on the heater pins. No other connections between the outer conductive coating and the chassis are permissible. The spark gaps should be designed for a breakdown voltage at the focusing electrode (g3) of 12 kV ($1,5 \times V_{g3}$ max. at $V_{a,g4}$ = 25 kV), and at the other electrodes of 1,5 to 2 kV.

The values of the series isolation resistors should be as high as possible (min. 1,5 kΩ) without causing deterioration of the circuit performance. The resistors should be able to withstand an instantaneous surge of 20 kV for the focusing circuit and 12 kV for the remaining circuits without arcing.

Additional information is available on request.

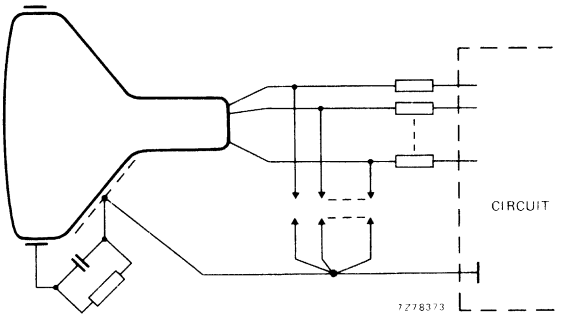

BEAM CORRECTIONS

Maximum required correction for register, as measured at the centre of the screen in any direction	0,08 mm
Centre convergence displacement of the blue and red beams is contained within a circle; max. diameter of circle	4,5 mm
Centre convergence displacement between the green beam and converged blue and red beams is contained within a circle; maximum diameter of circle	2,3 mm
Maximum centring error in any direction after colour purity, static convergence, and horizontal centre line correction, measured with deflection coils in nominal position	4 mm

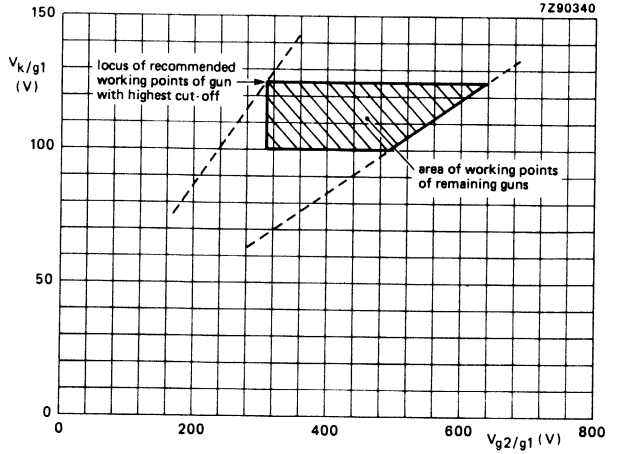

Spot cut-off design chart.

Grid 2 voltage (V_{g2}) adjusted for highest gun spot cut-off voltage V_k = 125 V.

Remaining guns adjusted for spot cut-off by means of cathode voltage

V_{g2} range 310 to 630 V;

V_k range 100 to 125 V.

Adjustment procedure:

Set the cathode voltage (V_k) for each gun at 125 V; increase the grid 2 voltage (V_{g2}) from approx. 300 V to the value at which one of the colours becomes just visible. Now decrease the cathode voltage of the remaning guns so that the other colours also become visible.

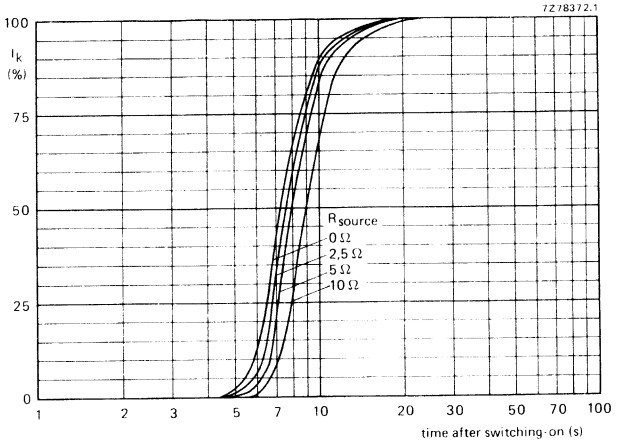

Cathode heating time after switching on, measured under typical operating conditions.

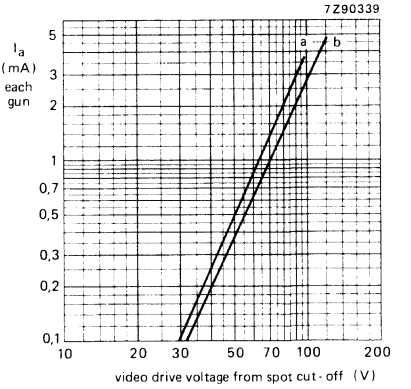

Typical cathode drive characteristics.

V_f = 6,3 V;

$V_{a,g4}$ = 23 kV;

V_{g3} adjusted for focus;

V_{g2} (each gun) adjusted to provide spot cut-off for V_k = 100 V (curve a), and V_k = 125 V (curve b).

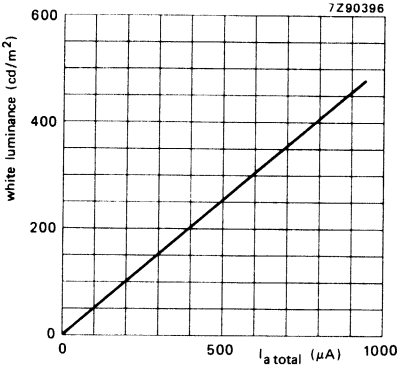

Luminance at the centre of the screen as a function of I_{total}. $V_{a,g4}$ = 23 kV, V_f = 6,3 V, V_{g3} adjusted for optimum focus.
Scanned area = 322,1 mm x 241,6 mm; CIE co-ordinates x = 0,313, y = 0,329.

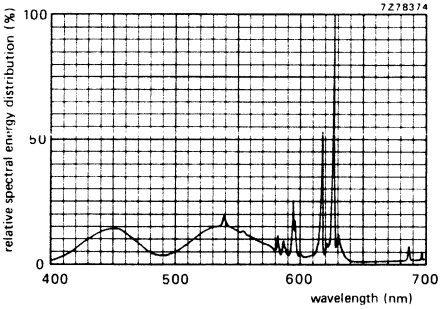

Simultaneous excitation of red, green and blue phosphor, measured in a tube, to produce white of x = 0,313, y = 0,329. Exact shape of the peaks depends on the resolution of the measuring apparatus.

Colour co-ordinates:

	x	y
red	0,635	0,340
green	0,315	0,600
blue	0,150	0,060

DEGAUSSING

The picture tube has an internal magnetic shield. This shield and the shadow mask with its suspension system may be provided with an automatic degaussing system, consisting of one magnetic coil winding mounted on the cone of the picture tube.

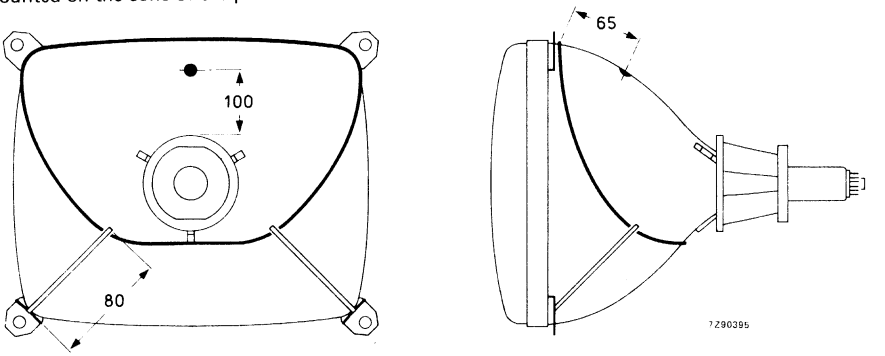

Position of degaussing coil on the picture tube; dimensions are given in mm.

For proper degaussing an initial magnetomotive force (m.m.f.) of 600 ampere-turns is required in the coil. This m.m.f. has to be gradually decreased by appropriate degaussing circuitry. In the steady state, no significant m.m.f. should remain in the coil ($\leqslant$ 0,6 ampere-turns). If single-phase power rectification is employed in the t.v. circuitry, provision should be included to prevent asymmetric distortion of the a.c. voltage applied to the degaussing circuit due to high d.c. inrush currents. An example of a degaussing circuit and coil data for various mains voltages are given below.

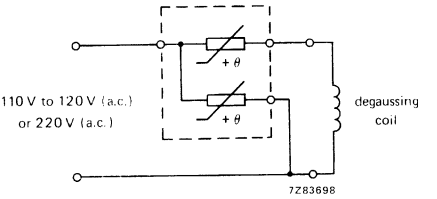

Degaussing circuit using dual PTC thermistor.

Data of degaussing coil

	110 V (a.c.) mains	220 V (a.c.) mains
Circumference	105 cm	105 cm
Number of turns	60	120
Copper wire diameter	0,45 mm	0,35 mm
Resistance	7 Ω	23 Ω
Catalogue number of appropriate dual PTC thermistor	2322 662 98013	2322 662 98009

Hi-Bri COLOUR PICTURE TUBE

- 90° deflection
- In-line, thermally stable hi-bi potential A R T* gun
- 22,5 mm neck diameter
- Hi-Bri technology
- Pigmented phosphors
- Slotted shadow mask optimized for minimum moiré
- Fine pitch over entire screen
- Phosphor lines follow glass contour
- Quick heating low-power cathodes
- Soft-Flash technology
- Internal magnetic shield
- Reinforced envelope for push-through mounting
- Combined with a deflection unit of the AT1635 series, it forms a self-converging and raster correction free assembly

QUICK REFERENCE DATA

Deflection angle	90°
Minimum useful screen diagonal	38 cm
Overall-length	368 mm
Neck diameter	22,5 mm
Heating	6,3 V, 300 mA
Focusing voltage	31% of anode voltage

* Aberration reducing triode.

ELECTRON-OPTICAL DATA

Electron gun system		unitized triple-aperture electrodes
Focusing method		electrostatic
Focus lens		hi-bi-potential
Deflection method		magnetic
Delfection angles		
diagonal		approx. 90°
horizontal		approx. 78°
vertical		approx. 60°

ELECTRICAL DATA

Capacitances		
anode to external conductive coating including rimband	$C_{a(m+m')}$	max. 1600 pF min. 1000 pF
grid 1 to all other electrodes	C_{g1}	15 pF
cathode of each gun to all other electrodes	C_{kR}, C_{kG}, C_{kB}	4 pF
focusing electrode to all other electrodes	C_{g3}	4 pF
Heating		indirect by a.c. or d.c.
heater voltage	V_f	6,3 V
heater current	I_f	300 mA

OPTICAL DATA

Screen	metal-backed vertical phosphor stripes; phosphor lines follow glass contour
Screen finish	satinized
Useful screen dimensions	
diagonal	min. 382,3 mm
horizontal axis	min. 322,1 mm
vertical axis	min. 241,6 mm
area	min. 755 cm^2
Phosphors	
red	pigmented europium activated rare earth
green	sulphide type
blue	pigmented sulphide type
Centre-to-centre distance of vertical identical colour phosphor stripes, at screen centre	0,70 mm
Light transmission of face glass at centre	66,8%

MECHANICAL DATA (see also the figures on the following pages)

Overall length	368,1 ± 5 mm
Neck diameter	$22{,}5\ ^{+\ 1{,}4}_{-0{,}7}$ mm*
Bulb dimensions	
diagonal	max. 418,8 mm
width	max. 360,6 mm
height	max. 281,8 mm
Base	JEDEC B8-288
Anode contact	small cavity contact J1-21, IEC 67-III-2
Mounting position	anode contact on top
Net mass	approx. 8 kg

Handling

During shipment and handling the tube should not be subjected to accelerations greater than 35g in any direction.

* In the region of 66 mm from the neck end, the maximum diameter is 23,2 mm.

MECHANICAL DATA (continued)

Notes are given after the drawings

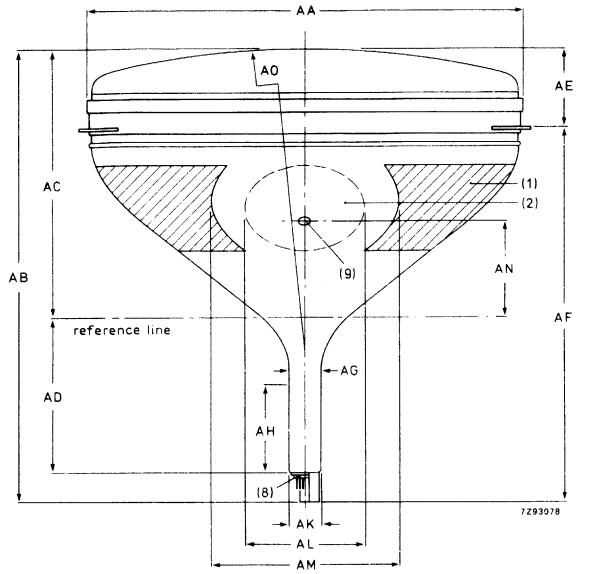

Dimensions in mm

AA	365 max
AB	373,1 max
AC	232,0 ± 4
AD	118,7 ± 1
AE	69,0 max
AF	307,0 max
AG	$22{,}5^{+1{,}4}_{-0{,}7}$
AH	66
AK	22,5 ± 0,7
AL	110 ± 10
AM	160 ± 3
AN	85,0 ± 3,2
AO	R653

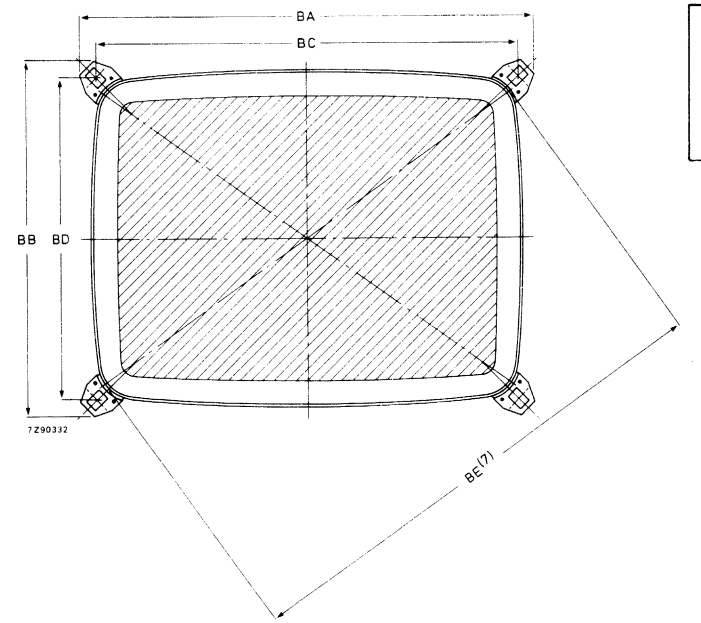

Dimensions in mm

BA	384 max
BB	305 max
BC	355,8
BD	276,7
BE	423 max

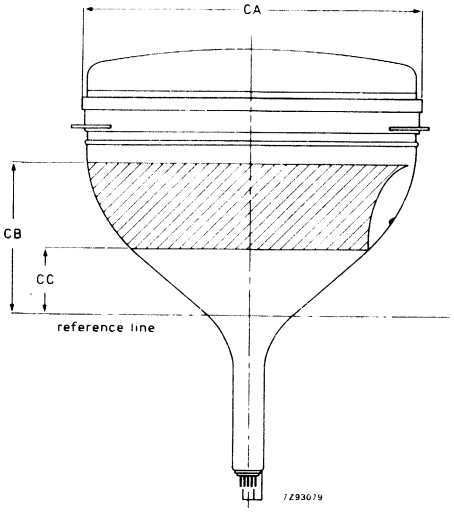

Dimensions in mm

CA	286 max
CB	126 min
CC	63 max

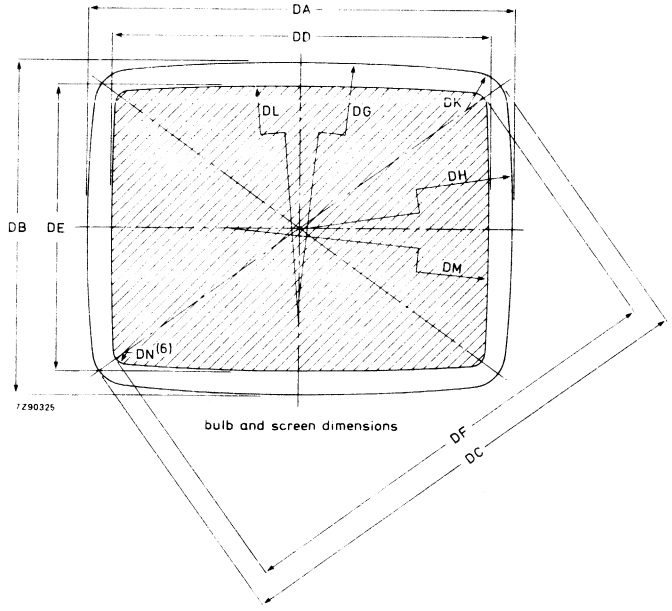

Dimensions in mm

DA	359,0 ± 1,6
DB	280,2 ± 1,6
DC	417,2 ± 1,6
DD	322,1 min
DE	241,6 min
DF	382,3 min
DG	R1592
DH	R1255
DK	R28,5
DL	R2148
DM	R1588
DN	R11,1

MECHANICAL DATA (continued)

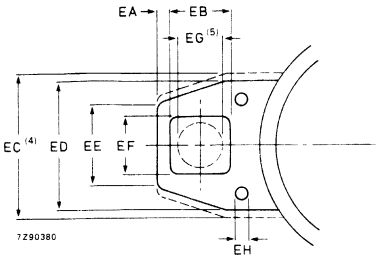

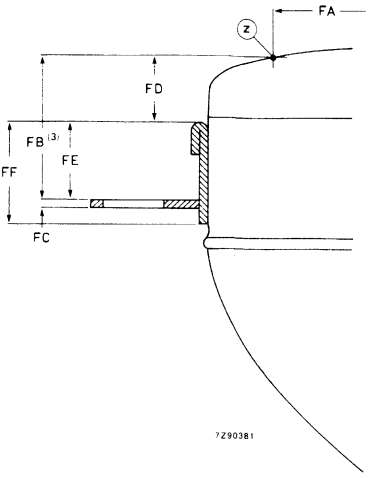

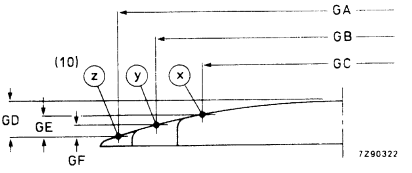

Dimensions in mm

EA	3 min
EB	14,5 ± 0,2
EC	33 max
ED	30 ± 1
EE	20
EF	14,5 ± 0,2
EG	11,5
EH	3,0 min

Dimensions in mm

GA	382,3
GB	322,1
GC	241,6
GD	28,6 ± 2,0
GE	17,3 ± 2,0
GF	8,4 ± 2,0

Dimensions in mm

FA	382,3
FB	37,5 ± 1,8
FC	3 max
FD	16 min
FE	19,5 max
FF	25 max

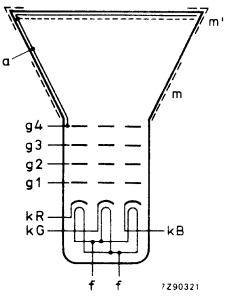

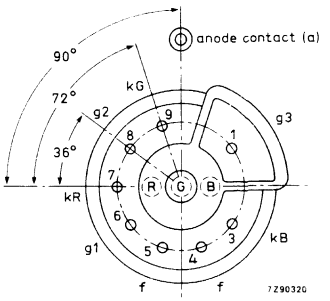

Notes to outline drawings on the preceding pages

1. Configuration of outer conductive coating may be different, but will contain the contact areas as shown in the drawing.
2. To clean this area, wipe only with a soft lintless cloth.
3. One of the four mounting lugs may deviate (1,5 mm max.) from the plane of the other three lugs. This deviation is incorporated in the tolerance of ± 1,8 mm.
4. Minimum space to be reserved for mounting lug.
5. The position of the mounting screw in the cabinet must be within a circle of 11,5 mm diamter drawn around the true geometrical positions, i.e. the corners of a rectangle of 355,8 mm x 276,7 mm.
6. Co-ordinates for radius R = 11,1 mm; x = 146,52 mm, y = 104,72 mm.
7. Maximum dimensions in plane of lugs.
8. The socket for this base should not be rigidly mounted; it should have flexible leads and be allowed to move freely. After mounting of the tube in the cabinet note that the position of the base can fall within a circle, having a diameter of max. 50 mm, concentric with an imaginary tube axis.
9. Small cavity contact J1-21, IEC 67-III-2.
10. The X, Y and Z reference points are located on the outside surface of the face plate at the intersection of the minor, major and diagonal screen axis respectively, with the minimum published screen.

Reference line gauge; G-R90CJ10

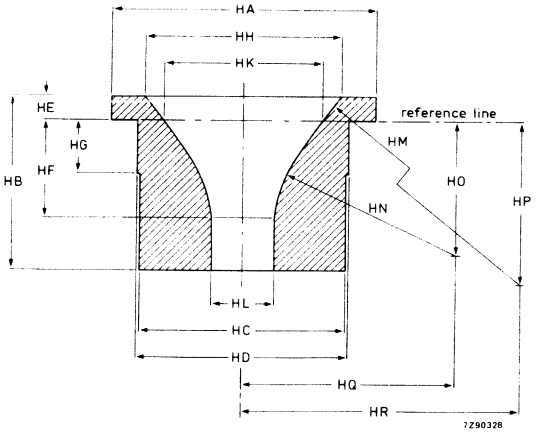

Dimensions in mm

HA	ϕ100,00
HB	65,00
HC	ϕ78,70
HD	ϕ80,00
HE	9,20 ± 0,02
HF	36,22 ± 0,02
HG	20,00
HH	ϕ75,48 ± 0,02
HK	ϕ60,77 ± 0,02
HL	$\phi 23{,}90^{+0{,}04}_{-0}$
HM	R220,00
HN	R70,00
HO	50,30
HP	132,71
HQ	80,52
HR	205,85

Maximum cone contour

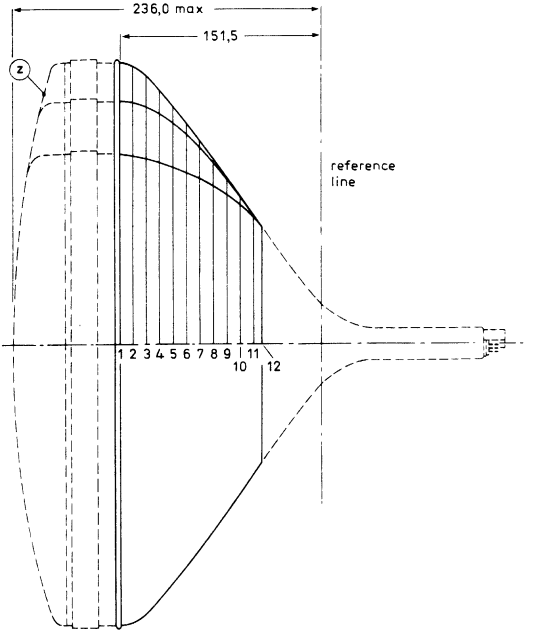

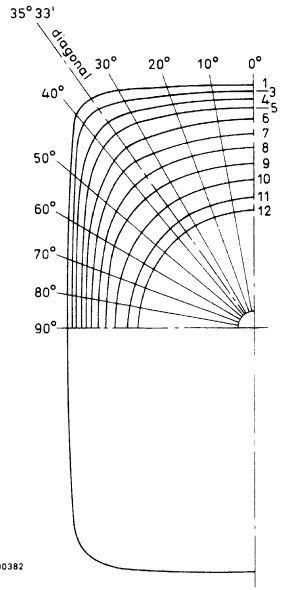

Dimensions in mm

section	nom. distance from reference line	distance from centre (max. values)														
		0°	10°	20°	25°	30°	32° 30'	diag. axes	37° 30'	40°	45°	50°	60°	70°	80°	90°
1	151,5	181,5	183,9	191,5	197,4	205,0	209,2	211,2	210,5	207,2	192,7	179,9	161,4	149,9	143,6	141,6
2	141,5	180,3	182,6	190,0	195,7	202,9	206,9	209,1	208,2	204,2	190,1	177,9	160,0	148,8	142,6	140,6
3	131,5	177,1	179,3	186,0	191,0	197,0	199,9	200,9	199,7	196,0	184,1	173,2	156,7	146,1	140,2	138,3
4	121,5	172,1	174,1	179,9	184,0	188,2	189,7	189,8	188,4	185,4	176,2	167,0	152,3	142,5	137,0	135,2
5	111,5	165,4	167,0	171,8	174,9	177,6	178,3	177,9	176,8	174,4	167,4	159,9	147,1	138,3	133,3	131,6
6	101,5	156,6	158,0	161,7	164,0	165,7	166,1	165,7	164,9	163,1	158,1	152,1	141,3	133,6	129,1	127,6
7	91,5	146,0	147,1	150,0	151,8	153,1	153,4	153,2	152,7	151,6	148,1	143,7	134,9	128,3	124,4	123,1
8	81,5	134,6	135,5	137,7	139,0	140,0	140,2	140,2	139,9	139,3	137,2	134,3	127,8	122,4	119,1	118,0
9	71,5	123,0	123,6	125,2	126,0	126,5	126,7	126,7	126,5	126,2	125,1	123,5	119,3	115,5	113,0	112,1
10	61,5	110,9	111,3	112,0	112,4	112,6	112,6	112,6	112,6	112,4	112,0	111,3	109,4	107,4	105,8	105,2
11	51,5	97,8	97,9	98,1	98,1	98,2	98,2	98,1	98,1	98,1	98,1	97,8	97,4	96,9	96,4	96,2
12	45,0	88,5	88,5	88,5	88,5	88,5	88,5	88,5	88,5	88,5	88,5	88,5	88,5	88,4	88,4	88,4

Base JEDEC B8-288

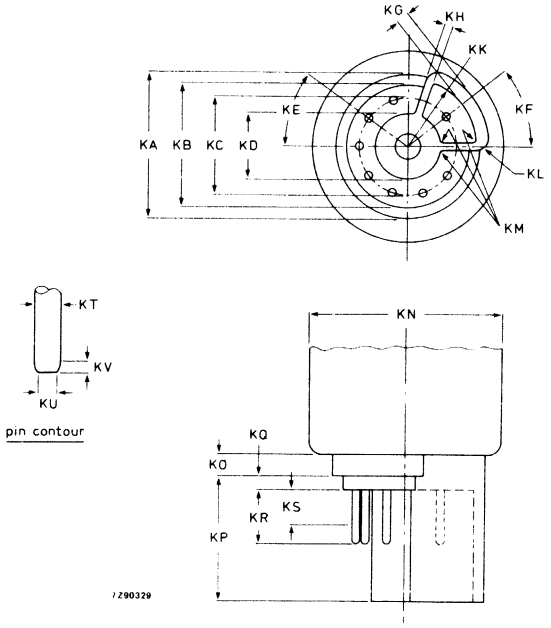

Dimensions in mm

KA	17,9 max
KB	15,4 max
KC	12,0
KD	7,9 min; 8,2 max
KE	36°
KF	38°
KG	1,3 max
KH	0,8 min; 1,0 max
KK	R8,66 ± 0,1
KL	R1,0
KM	R0,25
KN	23,2 max
KO	2,7 max
KP	15,4 ± 0,2
KQ	1,6 max
KR	6,85 max
KS	4,5 min
KT	1,016 ± 0,076
KU	0,63 max
KV	0,4 min

TYPICAL OPERATING CONDITIONS

The voltages are specified with respect to grid 1.

Anode voltage	$V_{a,g4}$	23 kV
Grid 3 (focusing electrode) voltage	V_{g3}	6,7 to 7,6 kV
Grid 2 voltage for a spot cut-off voltage V_k = 120 V	V_{g2}	310 to 650 V
Luminance at the centre of the screen*	L	165 cd/m²

* Tube settings adjusted to produce white of 6500K + 7 M.P.C.D. (x = 0,313, y = 0,329) focused raster, current density 0,4 μA/cm².

EQUIPMENT DESIGN VALUES

The values are valid for anode voltages between 20 and 27,5 kV.
The voltages are specified with respect to grid 1.

Grid 3 (focusing electrode) voltage	V_{g3}	29 to 31% of anode voltage
Grid 2 voltage and cathode voltage for visual extinction of focused spot	V_{g2} and V_k	see cut-off design chart
Difference in cut-off voltages between guns in any tube	ΔV_k	lowest value > 80% of highest value
Video drive characteristics		see graphs
Grid 3 (focusing electrode) current	I_{g3}	−5 to + 5 μA
Grid 2 current	I_{g2}	−5 to + 5 μA
Grid 1 current under cut-off conditions	I_{g1}	−5 to + 5 μA
To produce white of 6500K + 7 M.P.C.D. (CIE co-ordinates x = 0,313, y = 0,329)		
Percentage of the total anode current supplied by each gun (typical)		
red gun		38,3%
green gun		35,8%
blue gun		25,9%
Ratio of anode currents		
red gun to green gun		min. 0,8 average 1,1 max. 1,4
red gun to blue gun		min. 1,1 average 1,5 max. 1,9
blue gun to green gun		min. 0,5 average 0,7 max. 0,9

LIMITING VALUES (Design maximum rating system unless otherwise stated)

The voltages are specified with respect to grid 1.

Anode voltage	$V_{a,g4}$	max.	27,5	kV	notes 1, 2, 3
		min.	20	kV	notes 1 and 4
Long-term average current for three guns	I_a	max.	750	μA	note 5
Grid 3 (focusing electrode) voltage	V_{g3}	max.	11	kV	
Grid 2 voltage, peak	V_{g2p}	max.	1000	V	
Cathode voltage					
positive	V_k	max.	400	V	
positive operating cut-off	V_k	max.	200	V	
negative	$-V_k$	max.	0	V	
negative peak	$-V_{kp}$	max.	2	V	
Heater voltage	V_f	6,3 V	+5 % −10 %		notes 1 and 6
Heater-cathode voltage					
heater negative with respect to cathode					
after equipment warm-up period	V_{kf}	max.	200	V	
heater positive with respect to cathode	$-V_{kfp}$	peak	200	V	note 1
	$-V_{kf}$	max. (d.c. component value)	0	V	

Notes

1. Absolute maximum rating system.
2. The X-ray dose rate remains below the acceptable value of 0,5 mR/h, measured with ionization chamber when the tube is used within its limiting values.
3. During adjustment on the production line this value is likely to be surpassed considerably. It is therefore strongly recommended to first make the necessary adjustments for normal operation without picture tube.
4. Operation of the tube at lower voltages impairs the luminance and resolution.
5. The short-term average anode current should be limited by circuitry to 1000 μA.
6. For maximum cathode life and optimum performance, it is recommended that the heater supply be designed for 6,3 V at zero beam current.

FLASHOVER PROTECTION

With the high voltage used with this tube (max. 27,5 kV) internal flashovers may occur. As a result of the Soft-Flash technology these flashover currents are limited to approx. 60 A offering higher set reliability, optimum circuit protection and component savings.

Primary protective circuitry using properly grounded spark gaps and series isolation resistors (preferably carbon composition) is still necessary to prevent tube damage. The spark gaps should be connected to all picture tube electrodes at the socket according to the figure below; they are not required on the heater pins. No other connections between the outer conductive coating and the chassis are permissible. The spark gaps should be designed for a breakdown voltage at the focusing electrode (g3) of 12 kV (1,5 x V_{g3} max. at $V_{a,g4}$ = 25 kV), and at the other electrodes of 1,5 to 2 kV.

The values of the series isolation resistors should be as high as possible (min. 1,5 kΩ) without causing deterioration of the circuit performance. The resistors should be able to withstand an instantaneous surge of 20 kV for the focusing circuit and 12 kV for the remaining circuits without arcing.

Additional information is available on request.

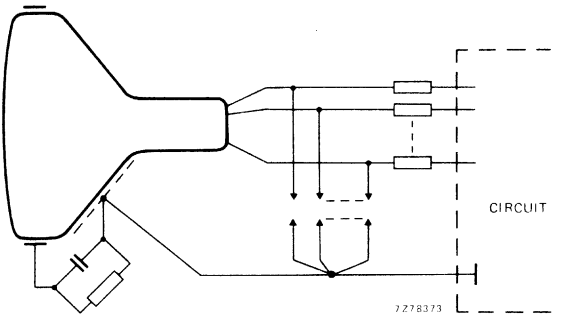

BEAM CORRECTIONS

Maximum required correction for register, as measured at the centre of the screen in any direction	0,08 mm
Centre convergence displacement of the blue and red beams is contained within a circle; max. diameter of circle	4,5 mm
Centre convergence displacement between the green beam and converged blue and red beams is contained within a circle; maximum diameter of circle	2,3 mm
Maximum centring error in any direction after colour purity, static convergence, and horizontal centre line correction, measured with deflection coils in nominal position	4 mm

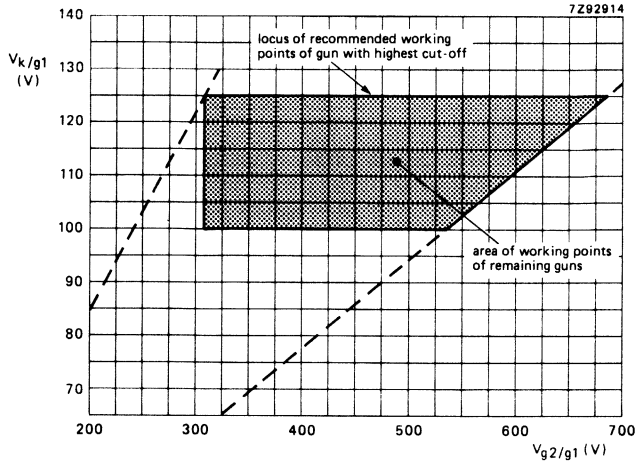

Spot cut-off design chart.

Grid 2 voltage (V_{g2}) adjusted for highest gun spot cut-off voltage V_k = 125 V.

Remaining guns adjusted for spot cut-off by means of cathode voltage

V_{g2} range 310 to 685 V;

V_k range 100 to 125 V.

Adjustment procedure:

Set the cathode voltage (V_k) for each gun at 125 V; increase the grid 2 voltage (V_{g2}) from approx. 300 V to the value at which one of the colours becomes just visible. Now decrease the cathode voltage of the remaning guns so that the other colours also become visible.

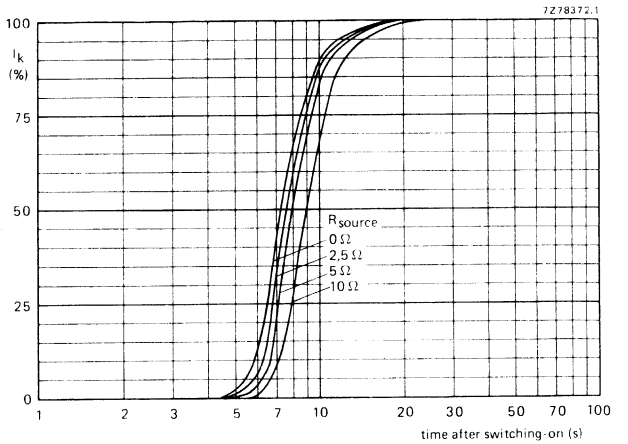

Cathode heating time after switching on, measured under typical operating conditions.

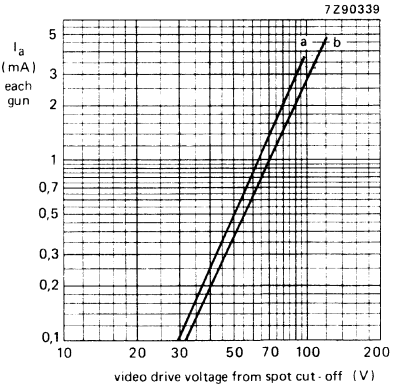

Typical cathode drive characteristics.

V_f = 6,3 V;

$V_{a,g4}$ = 23 kV;

V_{g3} adjusted for focus;

V_{g2} (each gun) adjusted to provide spot cut-off for V_k = 100 V (curve a), and V_k = 125 V (curve b).

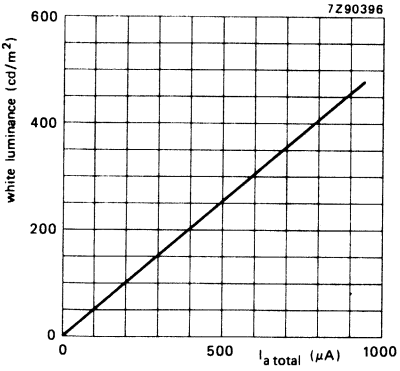

Luminance at the centre of the screen as a function of I_{total}. $V_{a,g4}$ = 23 kV, V_f = 6,3 V, V_{g3} adjusted for optimum focus.
Scanned area = 322,1 mm x 241,6 mm; CIE co-ordinates x = 0,313, y = 0,329.

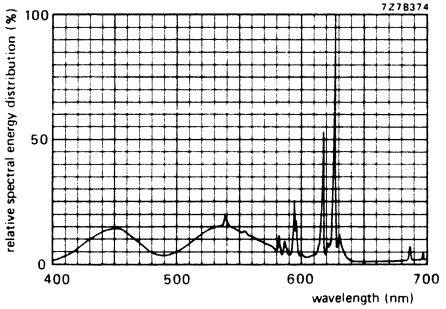

Simultaneous excitation of red, green and blue phosphor, measured in a tube, to produce white of x = 0,313, y = 0,329. Exact shape of the peaks depends on the resolution of the measuring apparatus.

Colour co-ordinates:

	x	y
red	0,635	0,340
green	0,315	0,600
blue	0,150	0,060

DEGAUSSING

The picture tube has an internal magnetic shield. This shield and the shadow mask with its suspension system may be provided with an automatic degaussing system, consisting of one magnetic coil winding mounted on the cone of the picture tube.

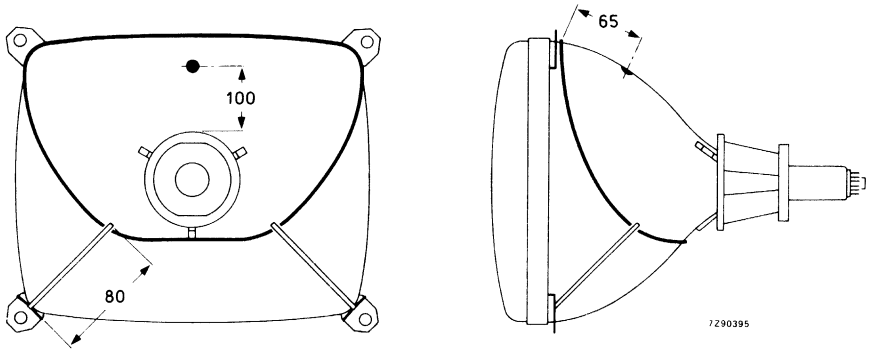

Position of degaussing coil on the picture tube; dimensions are given in mm.

For proper degaussing an initial magnetomotive force (m.m.f.) of 600 ampere-turns is required in the coil. This m.m.f. has to be gradually decreased by appropriate degaussing circuitry. In the steady state, no significant m.m.f. should remain in the coil ($\leqslant$ 0,6 ampere-turns). If single-phase power rectification is employed in the t.v. circuitry, provision should be included to prevent asymmetric distortion of the a.c. voltage applied to the degaussing circuit due to high d.c. inrush currents. An example of a degaussing circuit and coil data for various mains voltages are given below.

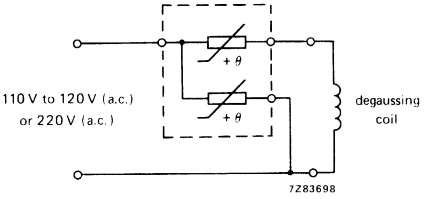

Degaussing circuit using dual PTC thermistor.

Data of degaussing coil

	110 V (a.c.) mains	220 V (a.c.) mains
Circumference	105 cm	105 cm
Number of turns	60	120
Copper wire diameter	0,45 mm	0,35 mm
Resistance	7 Ω	23 Ω
Catalogue number of appropriate dual PTC thermistor	2322 662 98013	2322 662 98009

DEFLECTION UNIT

QUICK REFERENCE DATA

Picture tube	
gun arrangement	in line
minimum useful screen diagonal	38 cm
neck diameter	22,5 mm
Deflection angle	90°
Line deflection current, edge to edge at 23 kV	2,07 A (p-p)
Inductance of line coils, parallel connected	2,50 mH
Field deflection current, edge to edge at 23 kV	0,78 A (p-p)
Resistance of field coils, series connected	11,8 Ω

APPLICATION

This deflection unit, in conjunction with devices for colour purity and static convergence is for 90° in-line colour picture tube A38EAC00X, with a neck diameter of 22,5 mm. The unit requires no raster correction circuitry.

DESCRIPTION

The deflection unit consists of saddle shaped line deflection coils and toroidal wound field deflection coils, thus forming a hybrid yoke. The unit has a metal non-magnetic clamping ring at the rear, to fix the deflection unit on the neck of the picture tube. With the deflection unit positioned axially for optimum purity, a clearance is available at the front which permits adjustment of convergence by tilting the unit in the vertical and/or horizontal plane. Wedges are recommended to secure the deflection unit in the chosen position.

MECHANICAL DATA

Dimensions in mm

Outlines

The deflection unit fits a tube with a neck diameter of $22{,}5^{+1{,}4}_{-0{,}7}$ mm.

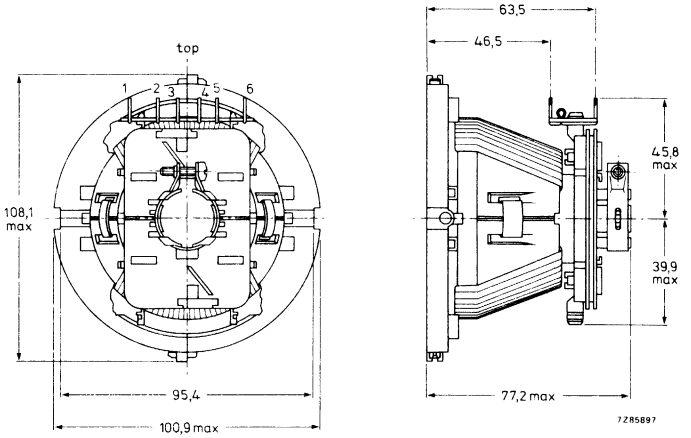

Fig. 1.

Maximum operating temperature (average copper temperature measured with resistance method)	+90 °C
Storage temperature range	−25 to +90 °C
Flame retardent	according to UL 1413, category 94-V1
Torque on neck clamp screw	1,0 Nm

ENVIRONMENTAL TEST SPECIFICATIONS

Vibration	IEC 68-2-6 (test Fc)
Shock	IEC 68-2-27 (test Ea)
Bump	IEC 68-2-29 (test Eb; 25g)
Cold	IEC 68-2-1 (test Ab)
Dry heat	IEC 68-2-2 (test Bb)
Damp heat, steady state	IEC 68-2-3 (test Ca)
Cyclic damp heat	IEC 68-2-30 (test Db)
Change of temperature	IEC 68-2-14 (test Nb)

ELECTRICAL DATA

Line coils	
Inductance at 1 V (r.m.s.), 1 kHz	2,50 mH ± 4%
Resistance at 25 °C	3,3 Ω ± 10%
Magnetic flux at 23 kV	5,18 mWb ± 2,5%
Line deflection current, edge to edge, at 23 kV	2,07 A (p-p)
Field coils	
Inductance at 1 V (r.m.s.), 1 kHz	27,5 mH ± 10%
Resistance at 25 °C	11,8 Ω ± 7%
Field deflection current, edge to edge, at 23 kV	0,78 A (p-p)
Cross talk	a voltage of 10 V, 15625 Hz applied to the line coils causes no more than 0,20 V across the field coils (damping resistors included)
Insulation resistance at 1 kV (d.c.)	
between line and field coils	> 500 MΩ
between line coil and core clamp	> 500 MΩ
between field coil and core clamp	> 10 MΩ

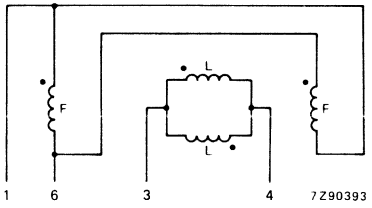

Fig. 2 Connection diagram, L = Line, F = Field.

ADJUSTMENT

- Adjust the static convergence with the four and six-pole magnets of the multipole unit AT1301 for the relative movement of the beams under influence of a four or six-pole magnet.
- Adjust colour purity by axial movement of the deflection unit and adjustment of the two-pole magnets for centring of the beams.
- Tighten the screw of the clamping ring on the deflection unit to secure the axial position of the unit on the picture tube.
- Readjust, if necessary, the convergence with the four and six-pole magnets.
- Tilt the unit in either horizontal or vertical direction, or in both directions so that blue, green and red lines converge at the end of the horizontal and vertical axis.
- This position of the unit has to be secured by three rubber wedges placed between the picture tube and the deflection unit. These wedges have to be cemented on to the picture tube.

DEFLECTION UNIT

QUICK REFERENCE DATA

Picture tube	
gun arrangement	in line
minimum useful screen diagonal	38 cm
neck diameter	22,5 mm
Deflection angle	90°
Line deflection current, edge to edge at 23 kV	2,21 A (p-p)
Inductance of line coils, parallel connected (including additional coil)	2,50 mH
Field deflection current, edge to edge at 23 kV	0,78 A (p-p)
Resistance of field coils, parallel connected	11,8 Ω

APPLICATION

This deflection unit, in conjunction with devices for colour purity and static convergence is for 90° in-line colour picture tube A38EAC00X, with a neck diameter of 22,5 mm. The unit requires no raster correction circuitry.

DESCRIPTION

The deflection unit consists of saddle-shaped line deflection coils and toroidal wound field deflection coils, thus forming a hybrid yoke. The unit has a metal non-magnetic clamping ring at the rear, to fix the deflection unit on the neck of the picture tube. With the deflection unit positioned axially for optimum purity, a clearance is available at the front which permits adjustment of convergence by tilting the unit in the vertical and/or horizontal plane. Wedges are recommended to secure the deflection unit in the chosen position.

MECHANICAL DATA

Dimensions in mm

Outlines

The deflection unit fits a tube with a neck diameter of $22{,}5^{+1{,}4}_{-0{,}7}$ mm.

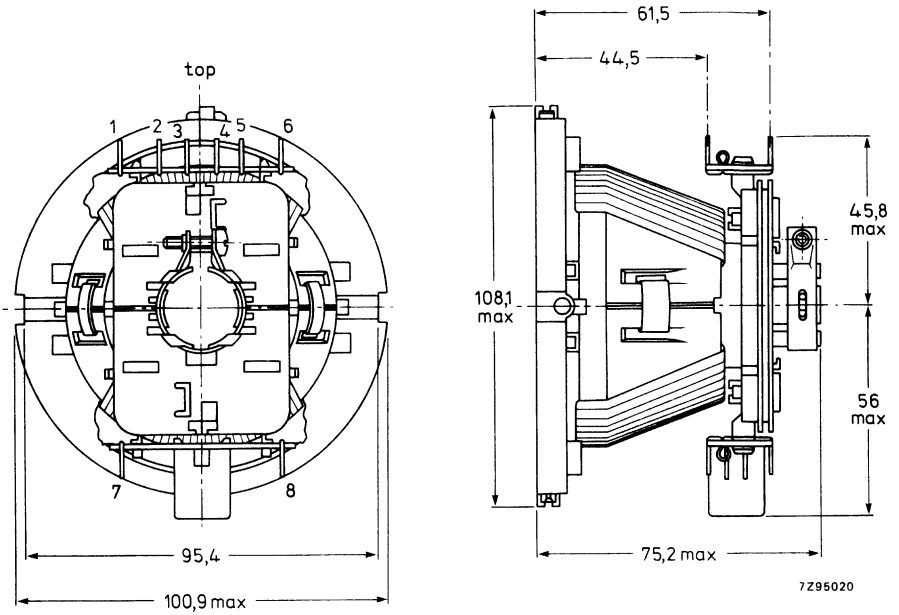

Fig. 1.

Maximum operating temperature (average copper temperature measured with resistance method)	+90 °C
Storage temperature range	−25 to +90 °C
Flame retardent	according to UL 1413, category 94-V1
Torque on neck clamp screw	1,0 Nm

ENVIRONMENTAL TEST SPECIFICATIONS

Vibration	IEC 68-2-6 (test Fc)
Shock	IEC 68-2-27 (test Ea)
Bump	IEC 68-2-29 (test Eb; 25g)
Cold	IEC 68-2-1 (test Ab)
Dry heat	IEC 68-2-2 (test Bb)
Damp heat, steady state	IEC 68-2-3 (test Ca)
Cyclic damp heat	IEC 68-2-30 (test Db)
Change of temperature	IEC 68-2-14 (test Nb)

ELECTRICAL DATA

Line coils, including additional coil	
Inductance at 1 V (r.m.s.), 1 kHz	2,50 mH ± 4%
Resistance at 25 °C	3,3 Ω ± 10%
Magnetic flux at 23 kV	5,53 mWb ± 2,5%
Line deflection current, edge to edge, at 23 kV	2,21 A (p-p)
Additional coil	
Inductance at 1 V (r.m.s.), 1 kHz	0,31 mH ± 4%
Field coils	
Inductance at 1 V (r.m.s.), 1 kHz	27,5 mH ± 10%
Resistance at 25 °C	11,8 Ω ± 7%
Field deflection current, edge to edge, at 23 kV	0,78 A (p-p)
Cross talk	a voltage of 10 V, 15625 Hz applied to the line coils causes no more than 0,20 V across the field coils (damping resistors included)
Insulation resistance at 1 kV (d.c.)	
between line and field coils	> 500 MΩ
between line coil and core clamp	> 500 MΩ
between field coil and core clamp	> 10 MΩ

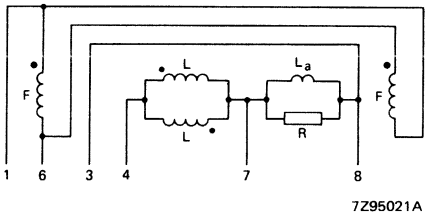

Fig. 2 Connection diagram. L = line coils; F = field coils; L_a = additional coil; R = 4,7 kΩ.

ADJUSTMENT

- Adjust the static convergence with the four and six-pole magnets of the multipole unit AT1301 for the relative movement of the beams under influence of a four or six-pole magnet.
- Adjust colour purity by axial movement of the deflection unit and adjustment of the two-pole magnets for centring of the beams.
- Tighten the screw of the clamping ring on the deflection unit to secure the axial position of the unit on the picture tube.
- Readjust, if necessary, the convergence with the four and six-pole magnets.
- Tilt the unit in either horizontal of vertical direction, or in both directions so that blue, green and red lines converge at the end of the horizontal and vertical axis.
- This position of the unit has to be secured by three rubber wedges placed between the picture tube and the deflection unit. These wedges have to be cemented on to the picture tube.

DEFLECTION UNIT

QUICK REFERENCE DATA

Picture tube	
gun arrangement	in line
minimum useful screen diagonal	38 cm
neck diameter	22,5 mm
Deflection angle	90°
Line deflection current, edge to edge at 23 kV	2,07 A (p-p)
Inductance of line coils, parallel connected	2,50 mH
Field deflection current, edge to edge at 23 kV	0,39 A (p-p)
Resistance of field coils, series connected	47,0 Ω

APPLICATION

This deflection unit, in conjunction with devices for colour purity and static convergence is for 90° in-line colour picture tube A38EAC00X, with a neck diameter of 22,5 mm. The unit requires no raster correction circuitry.

DESCRIPTION

The deflection unit consists of saddle-shaped line deflection coils and toroidal wound field deflection coils, thus forming a hybrid yoke. The unit has a metal non-magnetic clamping ring at the rear, to fix the deflection unit on the neck of the picture tube. With the deflection unit positioned axially for optimum purity, a clearance is available at the front which permits adjustment of convergence by tilting the unit in the vertical and/or horizontal plane. Wedges are recommended to secure the deflection unit in the chosen position.

MECHANICAL DATA

Dimensions in mm

Outlines

The deflection unit fits a tube with a neck diameter of $22{,}5^{+1{,}4}_{-0{,}7}$ mm.

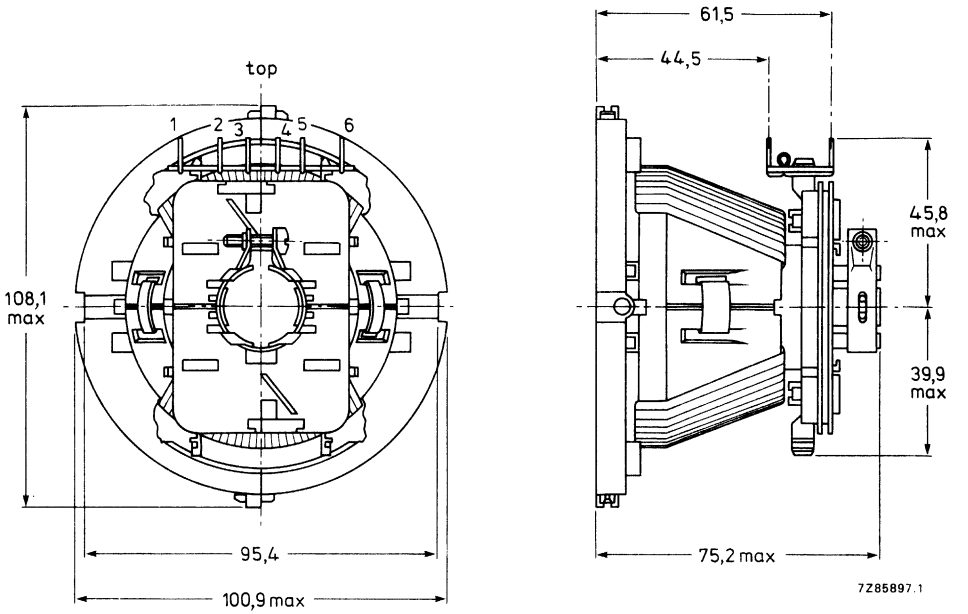

Fig. 1.

Maximum operating temperature (average copper temperature measured with resistance method)	+ 90 °C
Storage temperature range	−25 to +90 °C
Flame retardent	according to UL 1413, category 94-V1
Torque on neck clamp screw	1,0 Nm

ENVIRONMENTAL TEST SPECIFICATIONS

Vibration	IEC 68-2-6 (test Fc)
Shock	IEC 68-2-27 (test Ea)
Bump	IEC 68-2-29 (test Eb; 25g)
Cold	IEC 68-2-1 (test Ab)
Dry heat	IEC 68-2-2 (test Bb)
Damp heat, steady state	IEC 68-2-3 (test Ca)
Cyclic damp heat	IEC 68-2-30 (test Db)
Change of temperature	IEC 68-2-14 (test Nb)

ELECTRICAL DATA

Line coils	
Inductance at 1 V (r.m.s.), 1 kHz	2,50 mH ± 4%
Resistance at 25 °C	3,3 Ω ± 10%
Magnetic flux at 23 kV	5,18 mWb ± 2,5%
Line deflection current, edge to edge, at 23 kV	2,07 A (p-p)
Field coils	
Inductance at 1 V (r.m.s.), 1 kHz	110 mH ± 10%
Resistance at 25 °C	47,0 Ω ± 7%
Field deflection current, edge to edge, at 23 kV	0,39 A (p-p)
Cross talk	a voltage of 10 V, 15625 Hz applied to the line coils causes no more than 0,40 V across the field coils (damping resistors included)
Insulation resistance at 1 kV (d.c.)	
between line and field coils	> 500 MΩ
between line coil and core clamp	> 500 MΩ
between field coil and core clamp	> 10 MΩ

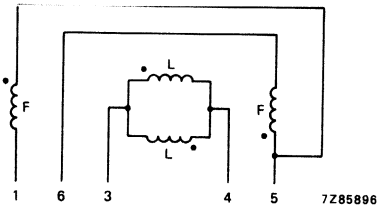

Fig. 2 Connection diagram, L = Line, F = Field.

ADJUSTMENT

- Adjust the static convergence with the four and six-pole magnets of the multipole unit AT1301 for the relative movement of the beams under influence of a four or six-pole magnet.
- Adjust colour purity by axial movement of the deflection unit and adjustment of the two-pole magnets for centring of the beams.
- Tighten the screw of the clamping ring on the deflection unit to secure the axial position of the unit on the picture tube.
- Readjust, if necessary, the convergence with the four and six-pole magnets.
- Tilt the unit in either horizontal or vertical direction, or in both directions so that blue, green and red lines converge at the end of the horizontal and vertical axis.
- This position of the unit has to be secured by three rubber wedges placed between the picture tube and the deflection unit. These wedges have to be cemented on to the picture tube.

FLAT SQUARE Hi-Bri COLOUR PICTURE TUBE

- Flat and square screen
- 90° deflection
- In-line, hi-bi potential A R T* gun
- 22,5 mm neck diameter
- Shadow mask of NiFe alloy with low thermal expansion
- Hi-Bri technology
- Mask with corner suspension
- Pigmented phosphors
- Fine pitch over entire screen
- Quick-heating low-power cathodes
- Soft flash
- Slotted shadow mask optimized for minimum moiré at 625 lines system
- Internal magnetic shield
- Internal multipole
- Reinforced envelope for push-through mounting
- The tube is supplied with a deflection unit of the AT6050 series; it forms a self-converging and raster correction free assembly

QUICK REFERENCE DATA

Deflection angle	90°
Minimum useful screen diagonal	41 cm
Overall length	369 mm
Neck diameter	22,5 mm
Heating	6,3 V, 300 mA
Focusing voltage	31% of anode voltage

* Aberration Reducing Triode.

ELECTRON-OPTICAL DATA

Electron gun system		unitized triple-aperture electrodes; aberration reducing triode
Focusing method		electrostatic
Focus lens		hi-bi-potential
Deflection method		magnetic
Deflection angles		
diagonal		approx. 90°
horizontal		approx. 78°
vertical		approx. 60°

ELECTRICAL DATA

Capacitances		
anode to external conductive coating including rimband	$C_{a(m+m')}$	max. 1600 pF min. 1000 pF
grid 1 to all other electrodes	C_{g1}	15 pF
cathode of each gun to all other electrodes	C_{kR}, C_{kG}, C_{kB}	4 pF
focusing electrode to all other electrodes	C_{g3}	4 pF
Heating		indirect by a.c. or d.c.
heater voltage	V_f	6,3 V
heater current	I_f	300 mA

OPTICAL DATA

Screen		metal-backed vertical phosphor stripes; phosphor lines follow glass contour
Screen finish		high polish
Useful screen dimensions		
diagonal		min. 406,4 mm
horizontal axis		min. 325,1 mm
vertical axis		min. 243,8 mm
area		min. 793 cm^2
Positional accuracy of the screen with respect to the glass contour		see Figures on the next page
Phosphors		
red		pigmented europium activated rare earth
green		sulphide type
blue		pigmented sulphide type
Centre-to-centre distance of vertical identical colour phosphor stripes, at screen centre		0,55 mm
Light transmission of face glass at centre		64%
Luminance at the centre of the screen	L	140 cd/m^2 *

* Tube settings adjusted to produce white D (x = 0,313, y = 0,329), focused raster, current density 0,4 $\mu A/cm^2$.

A = 139,40 mm
B = 181,94 mm
C = 100,00 mm
D = 142,24 mm
E = 29,20 mm

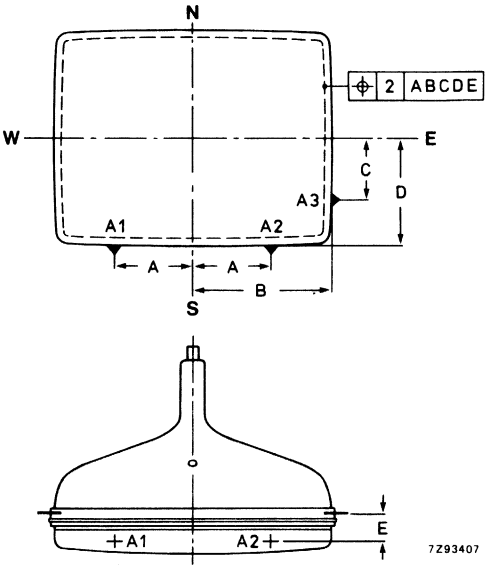

DEVELOPMENT DATA

MECHANICAL DATA (see also the figures on the following pages)

Overall length	369,1 ± 4,5 mm
Neck diameter	$22{,}5\ ^{+\ 1{,}4}_{-0{,}7}$ mm*
Bulb dimensions	
diagonal	max. 443,6 mm
width	max. 370,8 mm
height	max. 295,0 mm
Base	JEDEC B8-288
Anode contact	small cavity contact J1-21, IEC 67-III-2
Mounting position	anode contact on top
Net mass	approx. 9 kg

Handling

During shipment and handling the tube should not be subjected to accelerations greater than 35g in any direction.

* In the region of 66 mm from the neck end, the maximum diameter is 23,2 mm.

MECHANICAL DATA (continued)

Notes are given after the drawings.

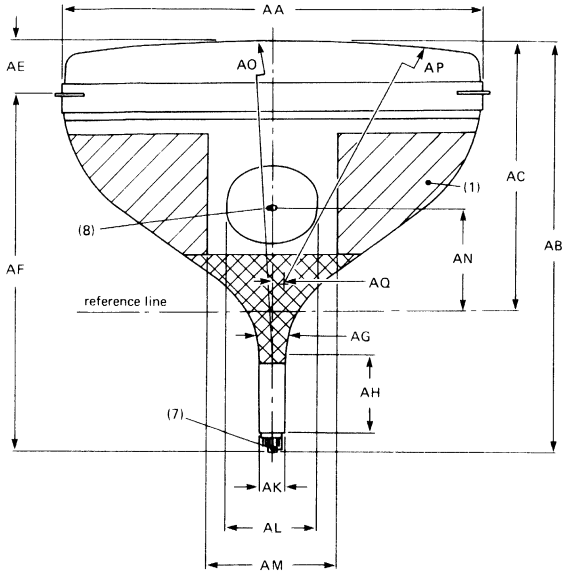

Dimensions in mm

AA	375 max
AB	369,1 ± 4,5
AC	230,3 ± 4
AE	54,8 max
AF	321,3 max
AG	$22{,}5\ ^{+1{,}4}_{-0{,}7}$
AH	66
AK	22,5 ± 0,7
AL	110 ± 10
AM	140 ± 3
AN	85,8 ± 3,2
AO	R1300 approx
AP	R1100 approx
AQ	17,7

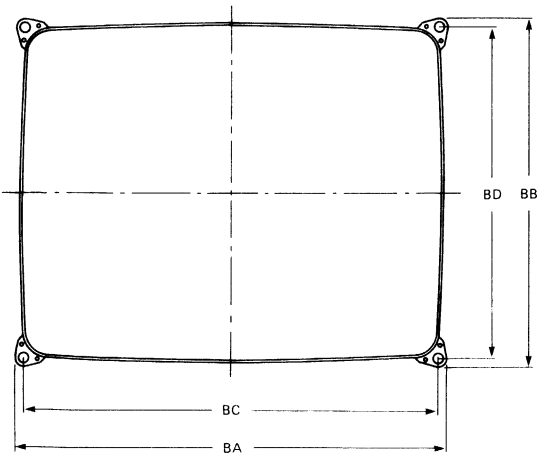

Dimensions in mm

BA	387 max
BB	311,5 max
BC	367
BD	291,5

DEVELOPMENT DATA

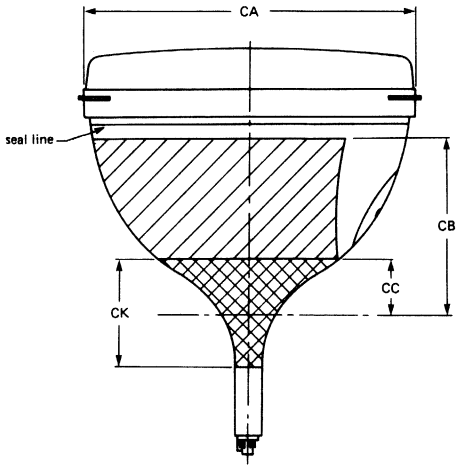

Dimensions in mm

CA	299 max
CB	144,5 min
CC	49 max
CG	448 max
CK	53 max

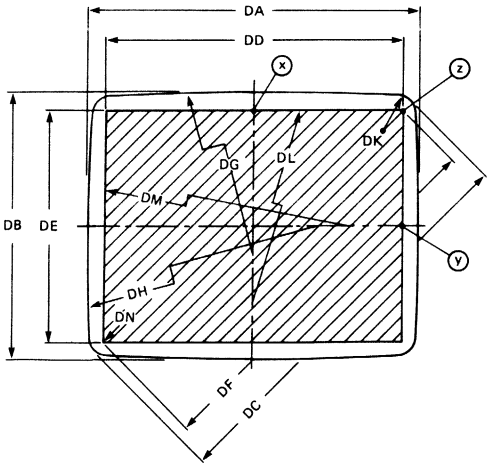

Dimensions in mm

DA	369,2 ± 1,6
DB	293,4 ± 1,6
DC	442 ± 1,6
DD	325,1 min
DE	243,8 min
DF	406,4 min
DG	R2481
DH	R2163
DK	R22,4
DL	R11000
DM	R6300
DN	R0

MECHANICAL DATA (continued)

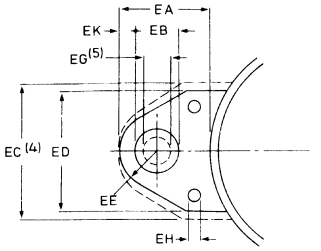

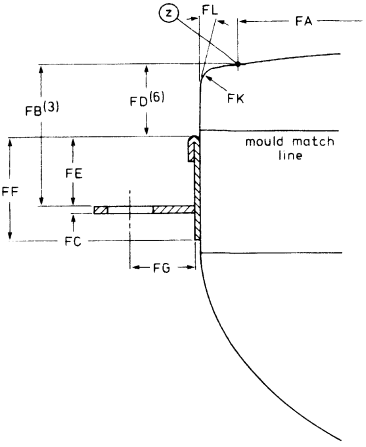

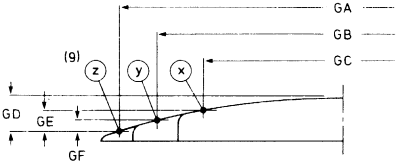

Dimensions in mm

EA	20,4 ± 0,5
EB	11,5 ± 0,2
EC	35 max
ED	30 ± 1
EE	R8
EG	8
EH	3 min
EK	2,25 ± 0,3

Dimensions in mm

GA	406,4
GB	325,1
GC	243,8
GD	16,5 ± 2
GE	11,0 ± 2
GF	6,3 ± 2

Dimensions in mm

FA	406,4
FB	34,8 ± 1,5
FC	2,5
FD	15,8 min
FE	17,5 max
FF	24 max
FG	13,1
FK	R6
FL	5°

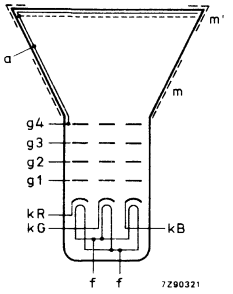

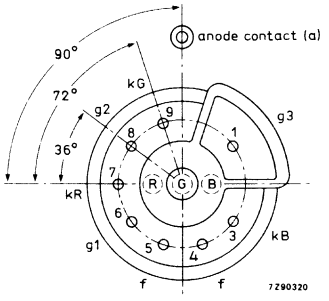

Notes to outline drawings on the preceding pages

1. Configuration of outer conductive coating may be different, but will contain the contact areas as shown in the drawing.
2. To clean this area, wipe only with a soft lintless cloth.
3. One of the four mounting lugs may deviate (1,5 mm max.) from the plane of the other three lugs. This deviation is incorporated in the tolerance of ± 1,5 mm.
4. Minimum space to be reserved for mounting lug.
5. The position of the mounting screw in the cabinet must be within a circle of 8 mm diameter drawn around the true geometrical positions, i.e. corners of a rectangle of 367 mm x 291,5 mm.
6. Distance from point Z to any hardware.
7. The socket for this base should not be rigidly mounted; it should have flexible leads and be allowed to move freely. After mounting of the tube in the cabinet note that the position of the base can fall within a circle, having a diameter of max. 50 mm, concentric with an imaginary tube axis.
8. Small cavity contact J1-21, IEC 67-III-2.
9. The X, Y and Z reference points are located on the outside surface of the face plate at the intersection of the minor, major and diagonal screen axis respectively, with the minimum published screen.

Sagittal heights with reference to screen centre at the edge of the minimum useful screen

DEVELOPMENT DATA

coordinates x mm	coordinates y mm	sagittal height mm
0*	162,55	10,16
10	162,55	10,20
20	162,55	10,32
30	162,55	10,52
40	162,55	10,81
50	162,55	11,18
60	162,55	11,63
70	162,55	12,17
80	162,55	12,79
90	162,55	13,50
100	162,55	14,29
110	162,55	15,17
120	162,55	16,13
121,90**	162,55	16,33
121,90	160	15,98
121,90	150	14,68
121,90	140	13,47
121,90	130	12,35
121,90	120	11,32
121,90	110	10,38
121,90	100	9,52
121,90	90	8,75
121,90	80	8,06
121,90	70	7,46
121,90	60	6,94
121,90	50	6,51
121,90	40	6,15
121,90	30	5,88
121,90	20	5,68
121,90	10	5,57
121,90▲	0	5,53

* Point ⊗
** Diagonal
▲ Point Ⓥ

Base JEDEC B8-288

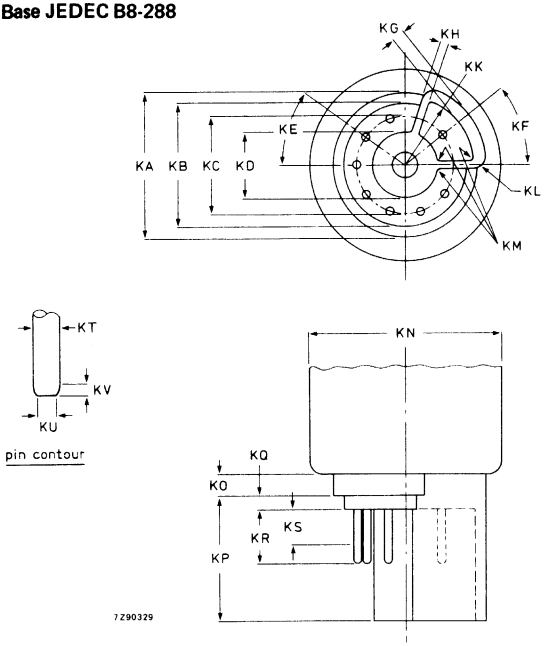

Dimensions in mm

KA	17,9 mm
KB	15,4 max
KC	12,0
KD	7,9 min; 8,2
KE	36°
KF	38°
KG	1,3 max
KH	0,8 min; 1,0 max
KK	R8,66 ± 0,1
KL	R1,0
KM	R0,25
KN	23,2 max
KO	2,7 max
KP	15,4 ± 0,2
KQ	1,6 max
KR	6,85 max
KS	4,5 min
KT	1,016 ± 0,076
KU	0,63 max
KV	0,4 min

Reference line gauge; G-R90CJ10

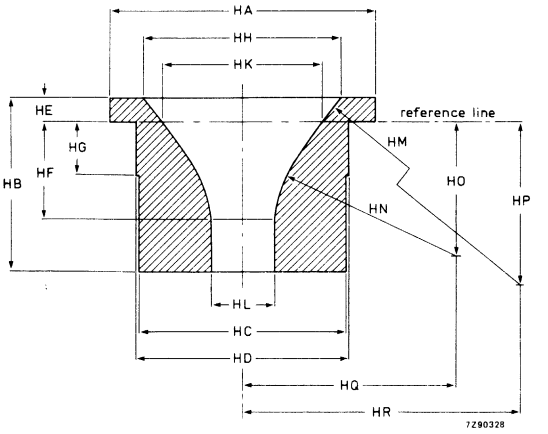

Dimensions in mm

HA	ϕ 100,00
HB	65,00
HC	ϕ 78,70
HD	ϕ 80,00
HE	9,20 ± 0,02
HF	36,22 ± 0,02
HG	20,00
HH	ϕ 75,48 ± 0,02
HK	ϕ 60,77 ± 0,02
HL	ϕ 23,90 $^{+0,04}_{-0}$
HM	R220,00
HN	R70,00
HO	50,30
HP	132,71
HQ	80,52
HR	205,85

DEVELOPMENT DATA

Maximum cone contour

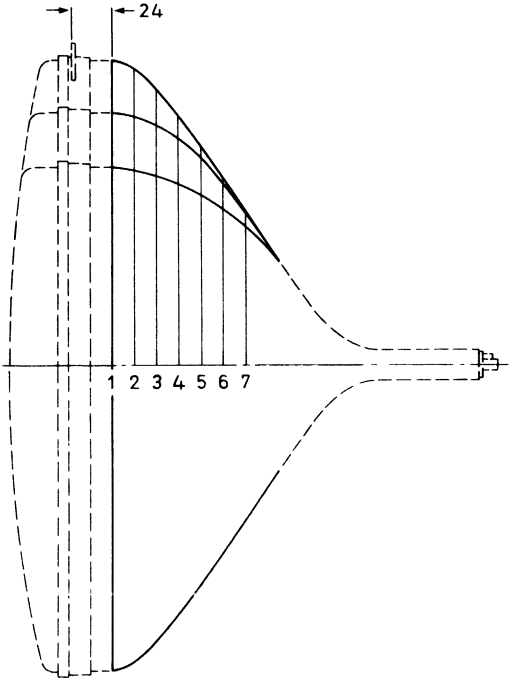

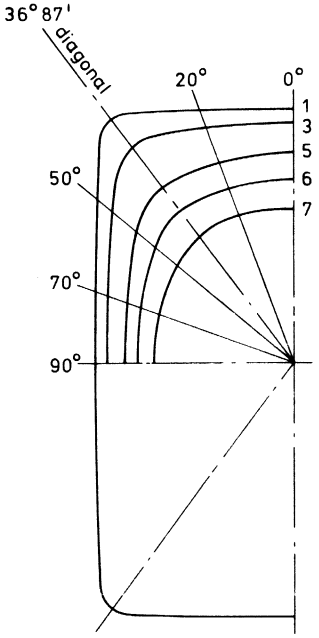

section	nom. distance from section 1	distance from centre (max. values)					
		0°	20°	diag.	50°	70°	90°
1	0	184,3	195,1	221,0	187,3	154,9	146,1
2	20	179,7	188,7	209,5	180,0	150,4	142,2
3	40	169,8	175,2	186,7	167,5	143,2	136,2
4	60	154,8	157,5	162,9	151,8	134,2	128,7
5	80	134,0	135,7	137,7	131,8	121,7	118,3
6	100	110,2	111,4	111,1	108,5	104,9	103,6
7	120	82,9	82,3	82,8	83,0	82,7	82,2
8	140	52,6	52,7	52,7	52,7	52,7	52,7

TYPICAL OPERATING CONDITIONS

The voltages are specified with respect to grid 1.

Anode voltage	$V_{a,g4}$	23 kV
Grid 3 (focusing electrode) voltage	V_{g3}	6,7 to 7,6 kV
Grid 2 voltage for a spot cut-off voltage V_k = 120 V	V_{g2}	310 to 650 V

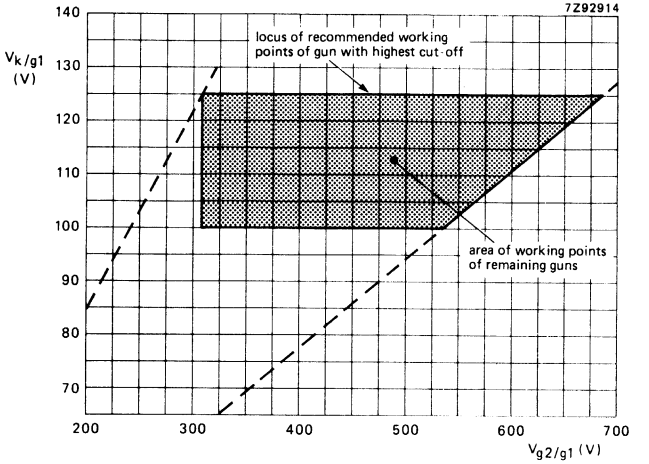

Spot cut-off design chart.

Grid 2 voltage (V_{g2}) adjusted for highest gun spot cut-off voltage V_k = 125 V.

Remaining guns adjusted for spot cut-off by means of cathode voltage

V_{g2} range 310 to 685 V;

V_k range 100 to 125 V.

Adjustment procedure:

Set the cathode voltage (V_k) for each gun at 125 V; increase the grid 2 voltage (V_{g2}) from approx. 300 V to the value at which one of the colours become just visible. Now decrease the cathode voltage of the remaining guns so that the other colours also become visible.

EQUIPMENT DESIGN VALUES

The values are valid for anode voltages between 20 and 27,5 kV.
The voltages are specified with respect to grid 1.

Grid 3 (focusing electrode) voltage	V_{g3}	29 to 33% of anode voltage
Grid 2 voltage and cathode voltage for visual extinction of focused spot	V_{g2} and V_k	see cut-off design chart
Difference in cut-off voltages between guns in any tube	ΔV_k	lowest value > 80% of highest value
Heater voltage	V_f	6,3 V at zero beam current
Video drive characteristics		see graphs
Grid 3 (focusing electrode) current	I_{g3}	−2 to + 2 μA
Grid 2 current	I_{g2}	−2 to + 2 μA
Grid 1 current under cut-off conditions	I_{g1}	−2 to + 2 μA

To produce white of 6500K + 7 M.P.C.D.
(CIE co-ordinates x = 0,313, y = 0,329)

Percentage of the total anode current supplied by each gun (typical)

red gun	38,3%
green gun	35,8%
blue gun	25,9%

Ratio of anode currents

red gun to green gun	min.	0,8
	average	1,1
	max.	1,4
red gun to blue gun	min.	1,1
	average	1,5
	max.	1,9
blue gun to green gun	min.	0,5
	average	0,7
	max.	0,9

DEVELOPMENT DATA

LIMITING VALUES (Design maximum rating system unless otherwise stated)

The voltages are specified with respect to grid 1.

Anode voltage	$V_{a,g4}$	max.	27,5	kV	notes 1, 2, 3
		min.	20	kV	notes 1 and 4
Long-term average current for three guns	I_a	max.	750	μA	note 5
Grid 3 (focusing electrode) voltage	V_{g3}	max.	11	kV	
Grid 2 voltage, peak	V_{g2p}	max.	1000	V	
Cathode voltage					
positive	V_k	max.	400	V	
positive operating cut-off, during adjustment	V_k	max.	200	V	
negative	$-V_k$	max.	0	V	
negative peak	$-V_{kp}$	max.	2	V	
Heater voltage	V_f		6,3 V $^{+5\ \%}_{-10\ \%}$		notes 1 and 6
Heater-cathode voltage					
heater negative with respect to cathode					
after equipment warm-up period	V_{kf}	max.	200	V	
heater positive with respect to cathode	$-V_{kfp}$	peak	200	V	note 1
	$-V_{kf}$	max. (d.c. component value)	0	V	

Notes

1. Absolute maximum rating system.
2. The X-ray dose rate remains below the acceptable value of 0,5 mR/h, measured with ionization chamber when the tube is used within its limiting values.
3. During adjustment on the production line this value is likely to be surpassed considerably. It is therefore strongly recommended to first make the necessary adjustments for normal operation without picture tube.
4. Operation of the tube at lower voltages impairs the luminance and resolution.
5. The short-term average anode current should be limited by circuitry to 1000 μA.
6. For maximum cathode life and optimum performance, it is recommended that the heater supply be designed for 6,3 V at zero beam current.

DEVELOPMENT DATA

FLASHOVER PROTECTION

With the high voltage used with this tube (max. 27,5 kV) internal flashovers may occur. As a result of the Soft-Flash technology these flashover currents are limited to approx. 60 A offering higher set reliability, optimum circuit protection and component savings.
Primary protective circuitry using properly grounded spark gaps and series isolation resistors (preferably carbon composition) is still necessary to prevent tube damage. The spark gaps should be connected to all picture tube electrodes at the socket according to the figure below; they are not required on the heater pins. No other connections between the outer conductive coating and the chassis are permissible.
The spark gaps should be designed for a breakdown voltage at the focusing electrode (g3) of 12 kV (1,5 x V_{g3} max. at $V_{a,g4}$ = 25 kV), and at the other electrodes of 1,5 to 2 kV.
The values of the series isolation resistors should be as high as possible (min. 1,5 kΩ) without causing deterioration of the circuit performance. The resistors should be able to withstand an instantaneous surge of 20 kV for the focusing circuit and 12 kV for the remaining circuits without arcing.
Additional information is available on request.

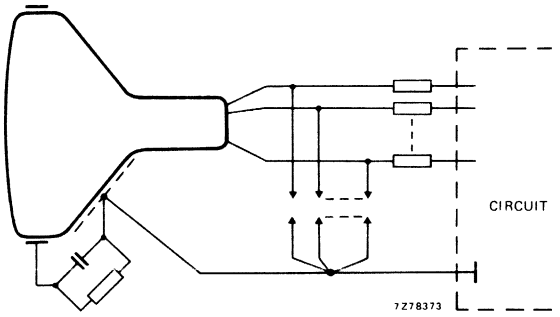

BEAM CORRECTIONS

Maximum centring error in any direction after colour purity, static convergence, and horizontal centre line correction, measured with deflection coils in nominal position	3 mm

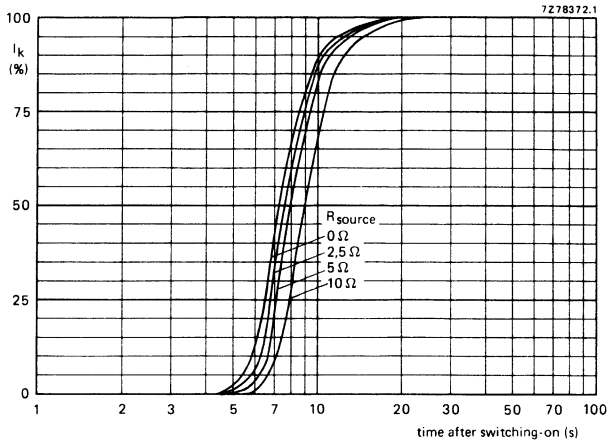

Cathode heating time after switching on, measured under typical operating conditions.

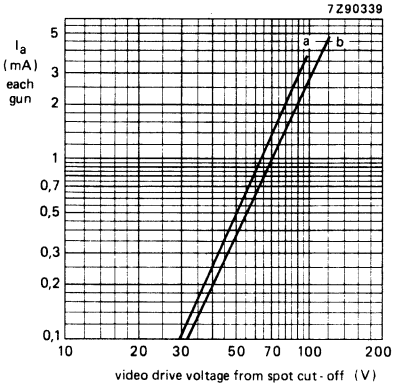

Typical cathode drive characteristics.

V_f = 6,3 V;

$V_{a,g4}$ = 23 kV;

V_{g3} adjusted for focus;

V_{g2} (each gun) adjusted to provide spot cut-off for V_k = 100 V (curve a), and V_k = 125 V (curve b).

For optimum picture performance it is recommended that the cathodes are not driven below + 1 V.

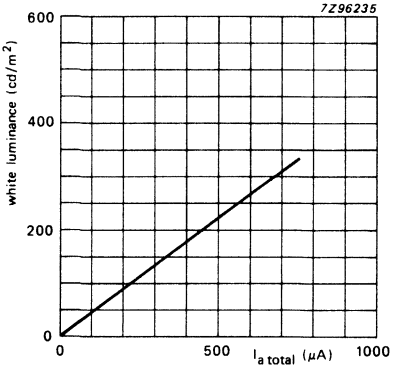

Luminance at the centre of the screen as a function of I_{total}.
$V_{a,g4}$ = 23 kV.
Scanned area = 325,1 mm x 243,8 mm;
CIE co-ordinates x = 0,313, y = 0,329.

DEVELOPMENT DATA

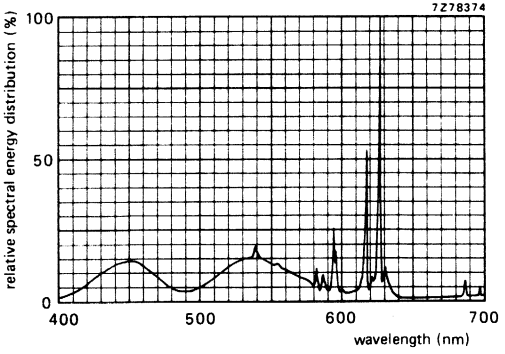

Simultaneous excitation of red, green and blue phosphor, measured in a tube, to produce white of x = 0,313, y = 0,329. Exact shape of the peaks depends on the resolution of the measuring apparatus.

Colour co-ordinates:	x	y
red	0,635	0,340
green	0,315	0,600
blue	0,150	0,060

DEGAUSSING

The picture tube has an internal magnetic shield. This shield and the shadow mask with its suspension system may be provided with an automatic degaussing system, consisting of one magnetic coil winding mounted on the cone of the picture tube.

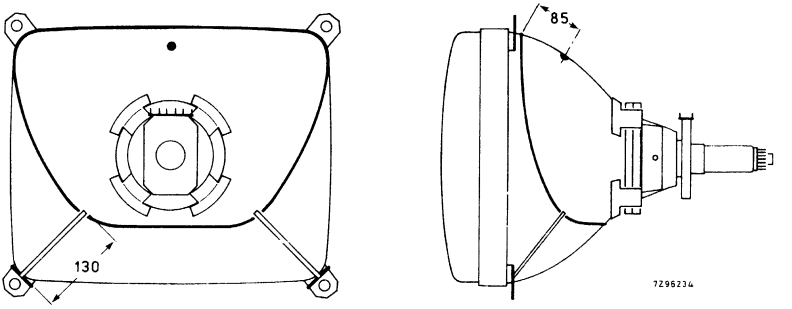

Position of degaussing coil on the picture tube; dimensions are given in mm.

For proper degaussing an initial magnetomotive force (m.m.f.) of 600 ampere-turns is required in the coil. This m.m.f. has to be gradually decreased by appropriate degaussing circuitry. In the steady state, no significant m.m.f. should remain in the coil ($\leqslant$ 0,6 ampere-turns). If single-phase power rectification is employed in the t.v. circuitry, provision should be included to prevent asymmetric distortion of the a.c. voltage applied to the degaussing circuit due to high d.c. inrush currents. An example of a degaussing circuit and coil data for various mains voltages are given below.

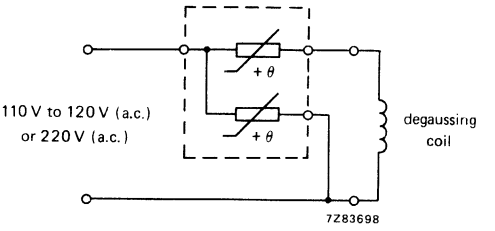

Degaussing circuit using dual PTC thermistor.

Data of degaussing coil

	110 V to 120 V (a.c.) mains	220 V (a.c.) mains
Circumference	113 cm	113 cm
Number of turns	70	120
Copper wire diameter	0,50 mm	0,36 mm
Resistance	6,8 Ω	23,5 Ω
Catalogue number of appropriate dual PTC thermistor	8222 298 73091	2322 662 98009

41 cm, 90° FLAT SQUARE COLOUR PICTURE TUBE ASSEMBLIES

- Factory preset tube/coil assemblies
- Self-converging and raster correction free
- 41 cm, 90° colour picture tube A41EAM . . X
- Hybrid saddle toroidal deflection unit of the AT6050 series

QUICK REFERENCE DATA

Deflection angle	90	°
Minimum useful screen diagonal	41	cm
Overall length	369	mm
Neck diameter	22,5	mm

AVAILABLE ASSEMBLIES

assembly type	assembly components
A41EAM00X01	type A41EAM00X + deflection unit AT6050/00
A41EAM00X04	type A41EAM00X + deflection unit AT6050/30
A41EAM00X16	tube A41EAM00X + deflection unit AT6050/42

MECHANICAL DATA

Dimensions in mm

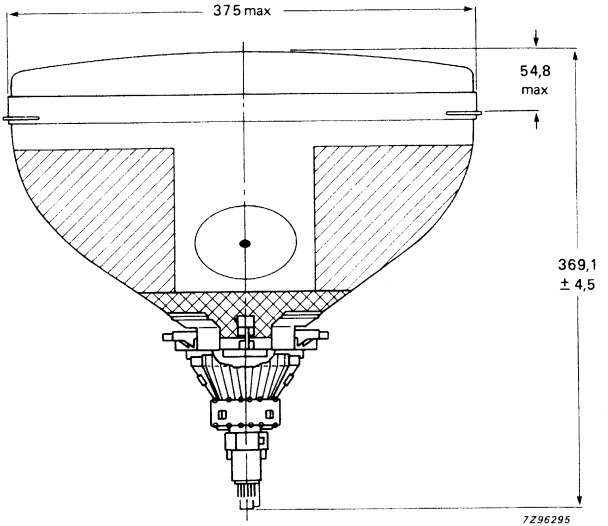

Colour picture tube assembly A41EAM . . X . .

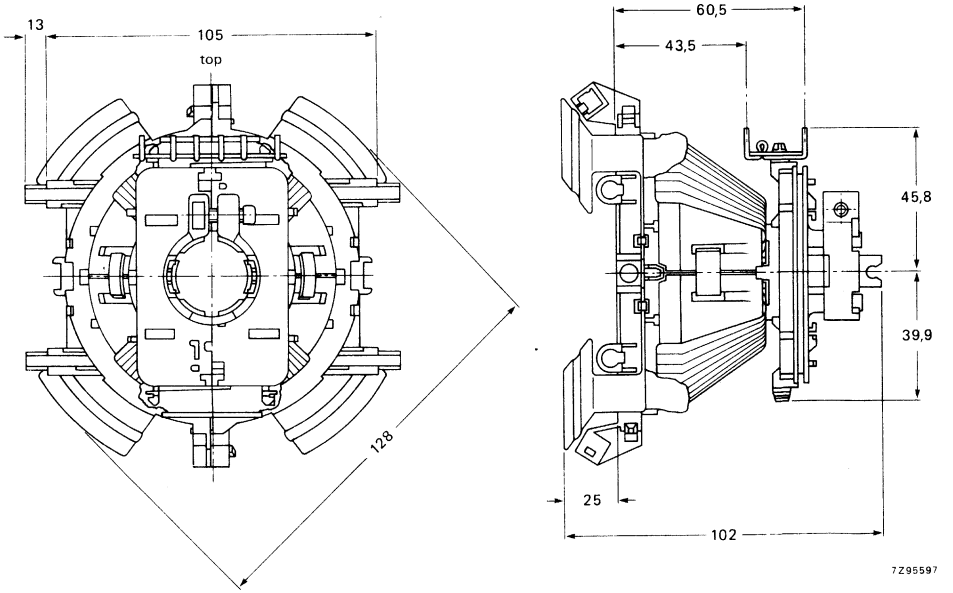

Deflection unit of AT6050 series.

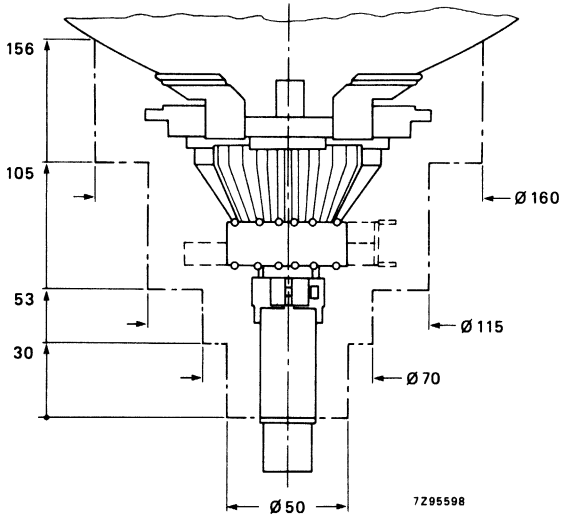

Yoke clearance.

DEVELOPMENT DATA

Maximum operating temperature (average copper temperature measured with resistance method)	+ 90 °C
Storage temperature range	−25 to +90 °C
Flame retardent	according to UL 1413, category 94-V1
Torque on neck clamp screw	1,0 Nm

ENVIRONMENTAL TEST SPECIFICATIONS OF DEFLECTION UNITS

Vibration	IEC 68-2-6 (test Fc)
Shock	IEC 68-2-27 (test Ea)
Bump	IEC 68-2-29 (test Eb; 25g)
Cold	IEC 68-2-1 (test Ab)
Dry heat	IEC 68-2-2 (test Bb)
Damp heat, steady state	IEC 68-2-3 (test Ca)
Cyclic damp heat	IEC 68-2-30 (test Db)
Change of temperature	IEC 68-2-14 (test Nb)

ELECTRICAL DATA OF DEFLECTION UNITS

parameter	deflection unit		
	AT6050/00	AT6050/30	AT6050/42
Line deflection coils			
inductance at 1 V (r.m.s.), 1 kHz	2,43 mH ± 4%	2,43 mH ± 4%	1,64 mH ± 4%
resistance at 25 °C	3,2 Ω ± 10%	3,2 Ω ± 10%	2,2 Ω ± 10%
magnetic flux	5,14 mWb ± 2,5%	5,14 mWb ± 2,5%	4,21 mWb ± 2,5%
Line deflection current			
edge to edge, at 25 kV	2,11 $A_{(p\text{-}p)}$	2,11 $A_{(p\text{-}p)}$	2,57 $A_{(p\text{-}p)}$
Field deflection coils			
inductance at 1 V (r.m.s.), 1 kHz	26,2 mH ± 10%	108 mH ± 10%	108 mH ± 10%
resistance at 25 °C	12,2 Ω ± 7%	50 Ω ± 7%	50 Ω ± 7%
Field deflection current,			
edge to edge, at 25 kV	0,82 $A_{(p\text{-}p)}$	0,41 $A_{(p\text{-}p)}$	0,41 $A_{(p\text{-}p)}$
Cross-talk: voltage across the field coils when a voltage of 10 V, 15625 Hz is applied to the line coils	< 0,2 V	< 0,4 V	< 0,4 V

Insulation resistance at 1 kV (d.c.)	
between line and field coils	> 500 MΩ
between line coil and core clamp	> 500 MΩ
between field coil and core clamp	> 10 MΩ

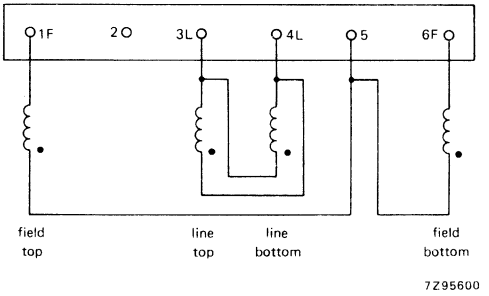

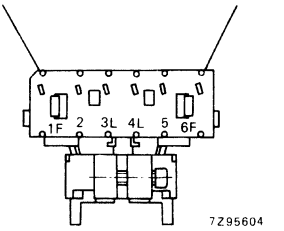

Connection diagram and top view of terminals of deflection unit AT6050/00. The beginning of the windings is indicated with ●.

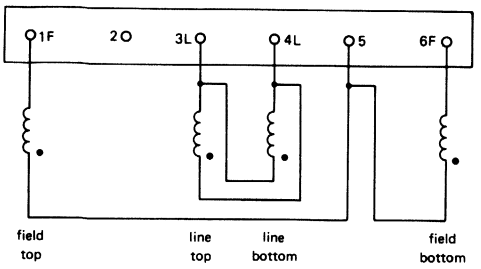

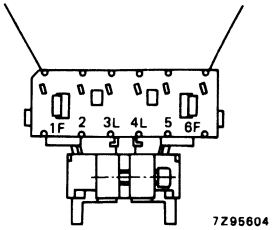

Connection diagram and top view of terminals of deflection unit AT6050/30. The beginning of the windings is indicated with ●.

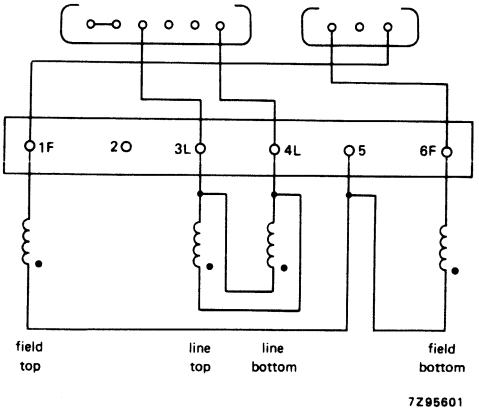

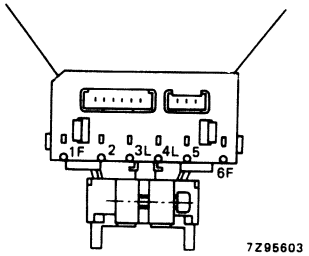

Connection diagram and top view of terminals of deflection unit AT6050/42. The beginning of the windings is indicated with ●.

Hi-Bri COLOUR PICTURE TUBE

- 90° deflection
- In-line gun, electrostatic bi-potential focus
- 29,1 mm neck diameter
- Hi-Bri screen with pigmented phosphor featuring high brightness and increased contrast performance
- Soft-Flash technology offering improved set reliability
- Slotted shadow mask optimized for minimum moiré
- Fine pitch over entire screen
- Phosphor lines follow glass contour
- Quick-heating cathodes
- Internal magnetic shield
- Reinforced envelope for push-through mounting
- When combined with an appropriate hybrid saddle toroidal deflection unit (e.g. AT1215), it forms a self-converging assembly; dynamic convergence is not required.

QUICK REFERENCE DATA

Deflection angle	90°
Face diagonal	42 cm
Overall length	368 mm
Neck diameter	29,1 mm
Heating	6,3 V, 685 mA
Focusing voltage	20% of anode voltage

ELECTRON-OPTICAL DATA

Electron gun system		unitized triple-aperture electrodes
Focusing method		electrostatic
Focus lens		bi-potential
Deflection method		magnetic
Deflection angles		
diagonal		approx. 90°
horizontal		approx. 78°
vertical		approx. 60°

ELECTRICAL DATA

Capacitances		
anode to external conductive coating including rimband	$C_{a(m+m')}$	max. 1600 pF min. 1000 pF
grid 1 to all other electrodes	C_{g1}	15 pF
cathode of each gun to all other electrodes	C_{kR}, C_{kG}, C_{kB}	5 pF
focusing electrode to all other electrodes	C_{g3}	6 pF
Heating		indirect by a.c. or d.c.
heater voltage	V_f	6,3 V
heater current	I_f	685 mA

OPTICAL DATA

Screen	metal-backed vertical phosphor stripes; phosphor lines follow glass contour
Screen finish	satinized
Useful screen dimensions	
diagonal	min. 382,3 mm
horizontal axis	min. 322,1 mm
vertical axis	min. 241,6 mm
area	min. 755 cm^2
Phosphors	
red	pigmented europium activated rare earth
green	sulphide type
blue	pigmented sulphide type
Centre-to-centre distance of vertical identical colour phosphor stripes, at screen centre	0,70 mm
Light transmission of face glass at centre	66,8%

MECHANICAL DATA (see also the figures on the following pages)

Overall length	368,4 ± 5 mm
Neck diameter	$29{,}1\ ^{+1{,}4}_{-0{,}7}$ mm *
Bulb dimensions	
diagonal	max. 418,8 mm
width	max. 360,6 mm
height	max. 281,8 mm
Base	12-pin base JEDEC B12-262
Anode contact	small cavity contact J1-21, IEC 67-III-2
Mounting position	anode contact on top
Net mass	approx. 8 kg

Handling

During shipment and handling the tube should not be subjected to accelerations greater than 35 g in any direction.

* In the region of 70 mm from the neck end, the maximum diameter is 30 mm.

MECHANICAL DATA (continued)

Dimensions in mm

Notes are given after the drawings.

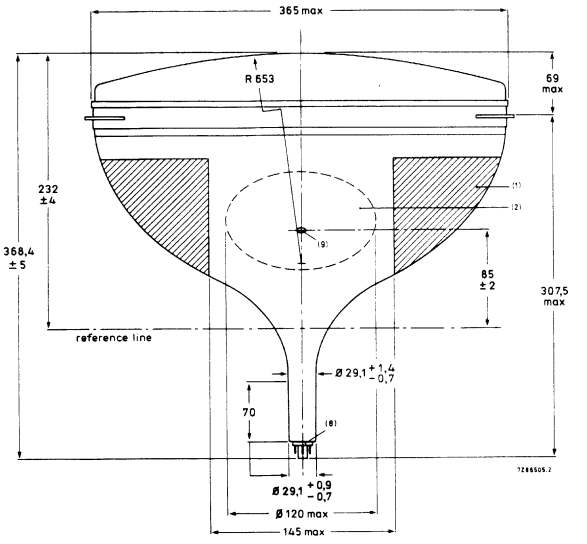

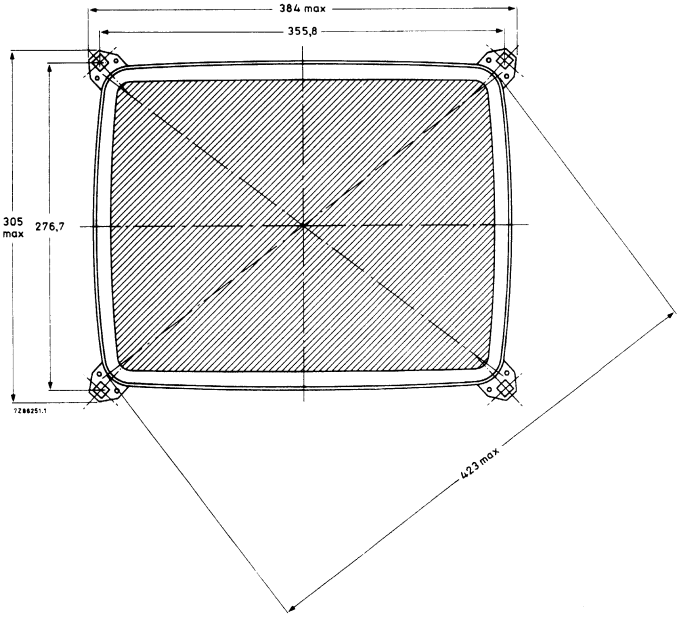

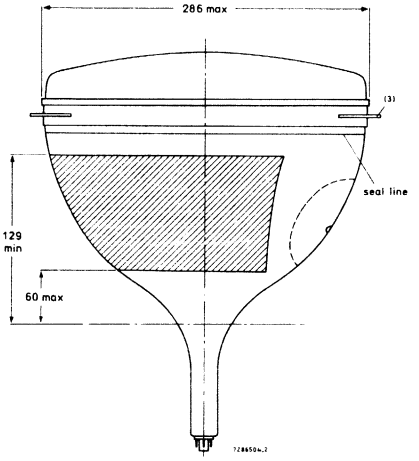
286 max
(3)
seal line
129
min
60 max

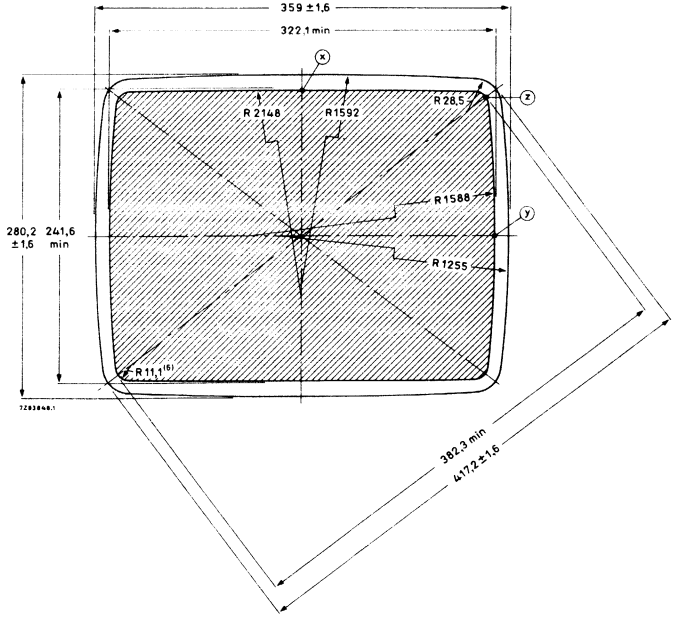
359 ±1,6
322,1 min
X
R 2148
R1592
R 28,5
Z
R1588
Y
280,2
±1,6
241,6
min
R1255
R 11,1 (6)
382,3 min
417,2 ±1,6

MECHANICAL DATA (continued)

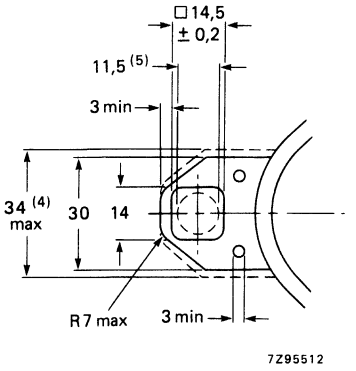

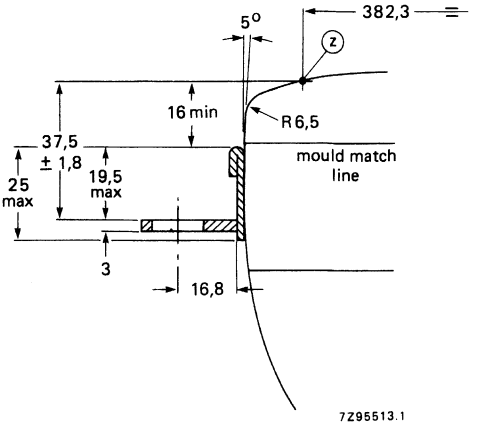

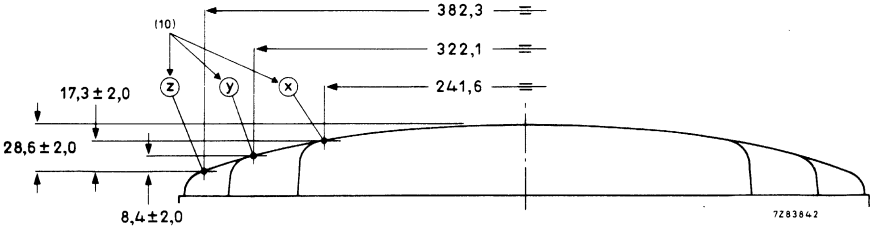

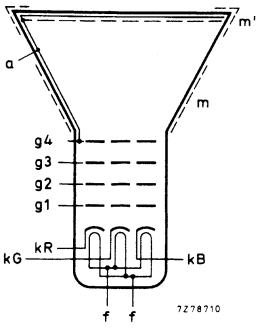

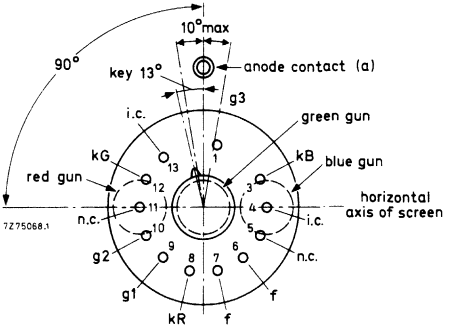

Notes to outline drawings on the preceding pages

1. Configuration of outer conductive coating may be different, but will contain the contact area as shown in the drawing.
2. To clean this area, wipe only with a soft lintless cloth.
3. One of the four mounting lugs may deviate (1,5 mm max.) from the plane of the other three lugs. This deviation is incorporated in the tolerance of ± 1,8 mm.
4. Minimum space to be reserved for mounting lug.
5. The position of the mounting screw in the cabinet must be within a circle of 7,5 mm diameter drawn around the true geometrical positions, i.e. the corners of a rectangle of 355,8 mm x 276,7 mm.
6. Co-ordinates for radius R = 11,1 mm: x = 146,52 mm, y = 104,72 mm.
7. Not applicable.
8. The socket for this base should not be rigidly mounted; it should have flexible leads and be allowed to move freely. After mounting of the tube in the cabinet note that the position of the base can fall within a circle, having a diameter of max. 50 mm, concentric with an imaginary tube axis.
9. Small cavity contact J1-21, IEC67-III-2.
10. The X, Y and Z reference points are located on the outside surface of the face plate at the intersection of the minor, major and diagonal screen axis respectively, with the minimum published screen.

Reference line gauge; GR90CJ4

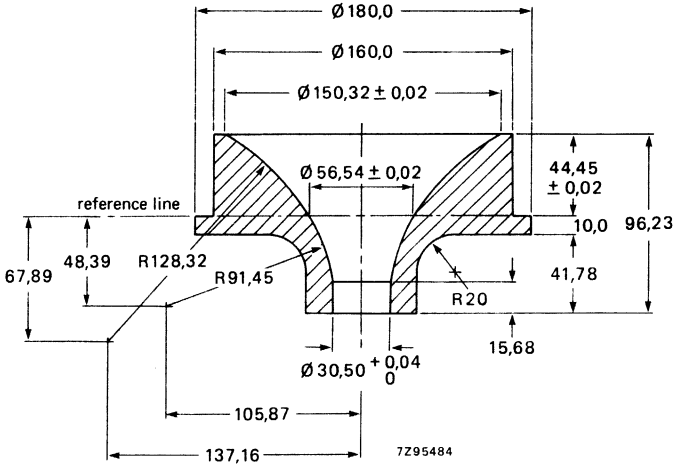

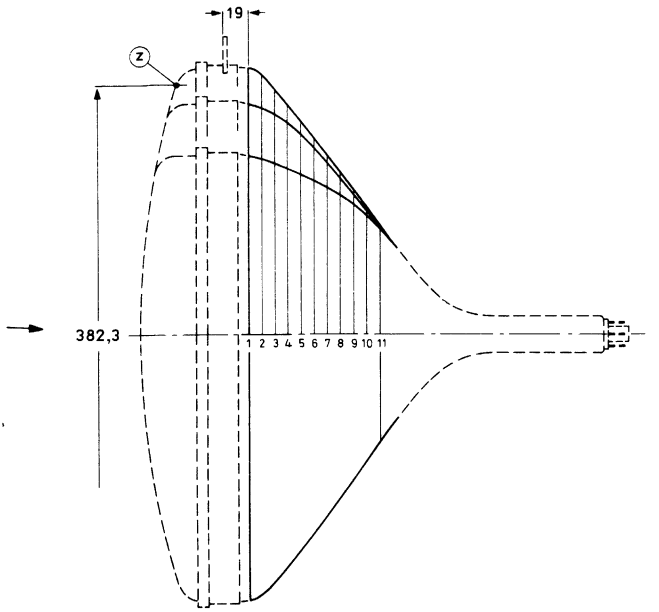

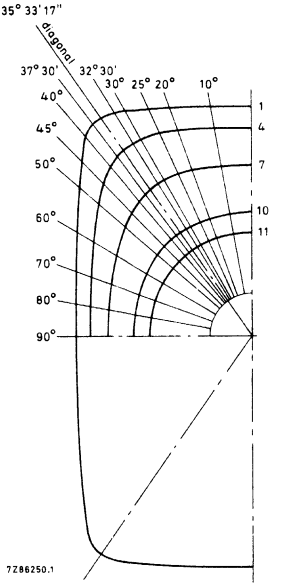

section	nom. distance from section 1	distance from centre (max. values)														
		0°	10°	20°	25°	30°	32°30'	diag. axes	37°30'	40°	45°	50°	60°	70°	80°	90°
Dimensions in mm																
1	0	179,1	181,5	189,1	195,0	202,1	205,7	208,5	207,8	203,3	189,6	177,2	159,0	147,6	141,3	139,3
2	10	176,1	178,4	185,4	190,7	196,9	199,9	201,9	200,9	196,4	183,9	172,5	155,4	144,4	138,4	136,5
3	20	170,8	172,8	178,7	182,9	187,5	189,3	190,0	188,9	185,4	175,4	165,5	150,0	139,9	134,2	132,4
4	30	164,1	165,8	170,8	174,1	177,2	178,2	177,9	176,7	173,9	166,0	157,8	144,2	135,1	129,9	128,2
5	40	155,6	157,1	161,4	164,0	166,1	166,4	165,6	164,3	161,9	155,7	149,1	137,9	130,0	125,4	123,9
6	50	145,1	146,5	150,1	152,2	153,6	153,6	152,8	151,7	149,9	145,1	140,1	131,1	124,5	120,6	119,3
7	60	133,6	134,7	137,4	138,9	139,9	140,0	139,5	138,9	137,8	134,6	130,9	123,8	118,6	115,4	114,3
8	70	121,8	122,6	124,4	125,3	125,9	125,9	125,8	125,6	125,1	123,5	121,3	116,4	112,2	109,6	108,7
9	80	109,5	110,0	110,9	111,3	111,6	111,6	111,6	111,6	111,5	110,9	110,1	107,6	105,0	103,1	102,4
10	90	96,5	96,6	96,8	96,9	97,0	97,1	97,1	97,2	97,2	97,1	97,0	96,3	95,4	94,5	94,1
11	100	82,2	82,1	82,1	82,1	82,2	82,2	82,2	82,2	82,2	82,2	82,2	82,2	82,2	82,2	82,1

12-pin base; JEDEC B12-262

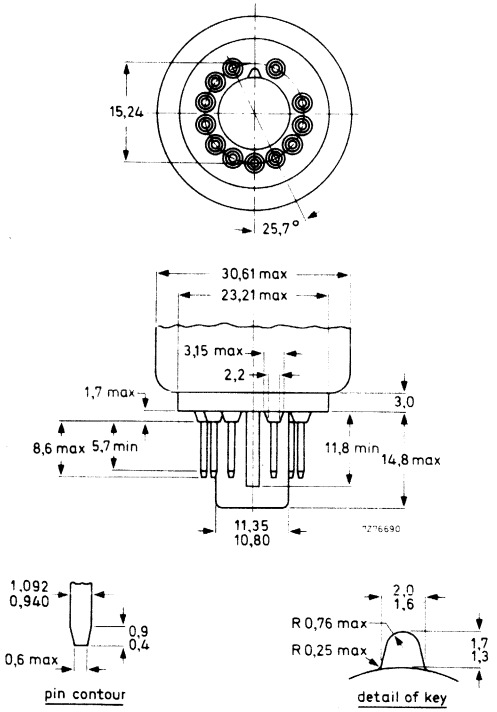

TYPICAL OPERATING CONDITIONS

The voltages are specified with respect to grid 1.

Anode voltage	$V_{a,g4}$	25 kV
Grid 3 (focusing electrode) voltage	V_{g3}	4,5 to 5,3 kV
Grid 2 voltage for a spot cut-off voltage V_K = 120 V	V_{g2}	310 to 560 V
Luminance at the centre of the screen *	L	180 cd/m²

* Tube settings adjusted to produce white of 6500K + 7 M.P.C.D. (x = 0,313, y = 0,329), focused raster, current density 0,4 μA/cm².

EQUIPMENT DESIGN VALUES

The values are valid for anode voltages between 20 and 27,5 kV.
The voltages are specified with respect to grid 1.

Grid 3 (focusing electrode) voltage	V_{g3}	18,8 to 22% of anode voltage
Grid 2 voltage and cathode voltage for visual extinction of focused spot	V_{g2} and V_k	see cut-off design chart *
Difference in cut-off voltages between guns in any tube	ΔV_k	lowest value > 80% of highest value
Video drive characteristics		see graphs **
Grid 3 (focusing electrode) current	I_{g3}	−5 to + 5 μA
Grid 2 current	I_{g2}	−5 to + 5 μA
Grid 1 current under cut-off conditions	I_{g1}	−5 to + 5 μA

To produce white of 6500K + 7 M.P.C.D.
(CIE co-ordinates x = 0,313, y = 0,329)

Percentage of the total anode current supplied by each gun (typical)

red gun	38,3%
green gun	35,8%
blue gun	25,9%

Ratio of anode currents

red gun to green gun	min.	0,8
	average	1,1
	max.	1,4
red gun to blue gun	min.	1,1
	average	1,5
	max.	1,9
blue gun to green gun	min.	0,5
	average	0,7
	max.	0,9

* The common V_{g2} should be adjusted as follows:
Set the cathode voltage, V_k, for each gun at 120 V. Increase the V_{g2} from about 300 V to the value at which the raster of one of the guns becomes just visible. Now decrease the V_k of the remaining guns so that the rasters of these guns also become visible.

** For optimum picture performance it is recommended that the cathodes are not driven below + 10 V.

LIMITING VALUES (Design maximum rating system unless otherwise stated)

The voltages are specified with respect to grid 1.

Anode voltage	$V_{a,g4}$	max.	27,5	kV	notes 1, 2, 3
		min.	20	kV	notes 1 and 4
Long-term average current for three guns	I_a	max.	750	μA	note 5
Grid 3 (focusing electrode) voltage	V_{g3}	max.	7	kV	
Grid 2 voltage, peak	V_{g2p}	max.	1000	V	
Cathode voltage					
positive	V_k	max.	400	V	
positive operating cut-off	V_k	max.	200	V	
negative	$-V_k$	max.	0	V	
negative peak	$-V_{kp}$	max.	2	V	
Heater voltage	V_f	6,3 V	+ 5 −10	% %	notes 1 and 6
Heater-cathode voltage					
heater negative with respect to cathode					
during equipment warm-up period not exceeding 15 s	V_{kf}	max.	450	V	note 1
after equipment warm-up period	V_{kf}	max.	250	V	
heater positive with respect to cathode	$-V_{kfp}$	peak	200	V	note 1
	$-V_{kf}$	max. (d.c. component value)	0	V	

Notes

1. Absolute maximum rating system.
2. The X-ray dose rate remains below the acceptable value of 0,5 mR/h, measured with ionization chamber when the tube is used within its limiting values.
3. During adjustment on the production line this value is likely to be surpassed considerably. It is therefore strongly recommended to first make the necessary adjustments for normal operation without picture tube.
4. Operation of the tube at lower voltages impairs the luminance and resolution.
5. The short-term average anode current should be limited by circuitry to 1000 μA.
6. For maximum cathode life and optimum performance, it is recommended that the heater supply be designed for 6,3 V at zero beam current.

FLASHOVER PROTECTION

With the high voltage used with this tube (max. 27,5 kV) internal flashovers may occur. As a result of the Soft-Flash technology these flashover currents are limited to approx. 60 A offering higher set reliability, optimum circuit protection and component savings.
Primary protective circuitry using properly grounded spark gaps and series isolation resistors (preferably carbon composition) is still necessary to prevent tube damage. The spark gaps should be connected to all picture tube electrodes at the socket according to the figure below; they are not required on the heater pins. No other connections between the outer conductive coating and the chassis are permissible.
The spark gaps should be designed for a breakdown voltage at the focusing electrode (g3) of 8,5 kV ($1{,}5 \times V_{g3}$ max. at $V_{a,g4}$ = 25 kV), and at the other electrodes of 1,5 to 2 kV.
The values of the series isolation resistors should be as high as possible (min. 1,5 kΩ) without causing deterioration of the circuit performance. The resistors should be able to withstand an instantaneous surge of 20 kV for the focusing circuit and 12 kV for the remaining circuits without arcing.
Additional information is available on request.

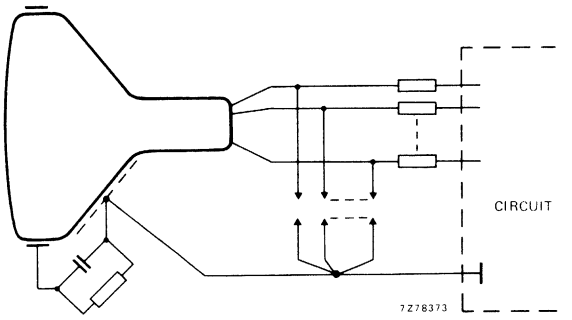

BEAM CORRECTIONS

Maximum required correction for register, as measured at the centre of the screen in any direction	0,08 mm
Centre convergence displacement of the blue and red beams is contained within a circle; max. diameter of circle	4,5 mm
Centre convergence displacement between the green beam and converged blue and red beams is contained within a circle; maximum diameter of circle	2,3 mm
Maximum centring error in any direction after colour purity, static convergence, and horizontal centre line correction, measured with deflection coils in nominal position	5 mm

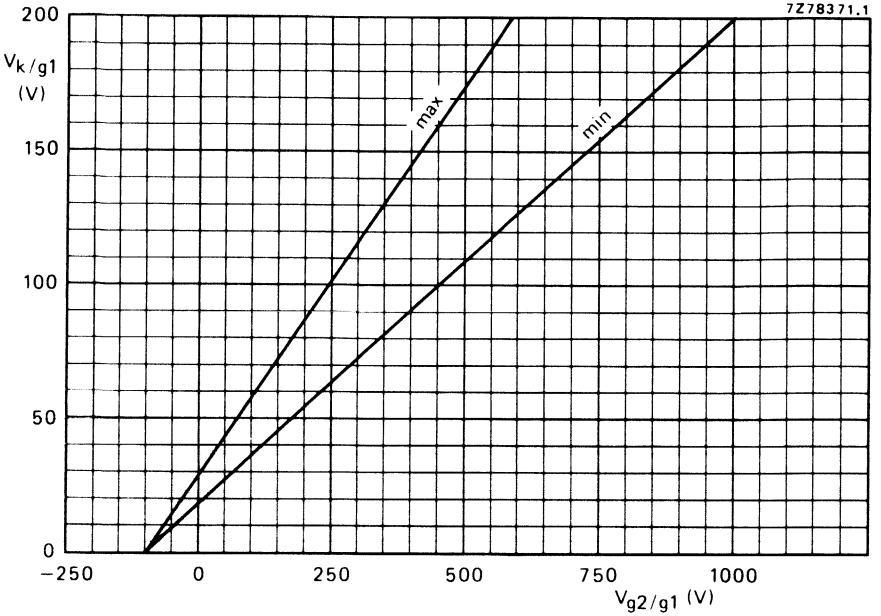

Spot cut-off design chart (cathode drive), V_{g3} adjusted for focus, $V_{a,g4}$ = 20 to 27,5 kV.

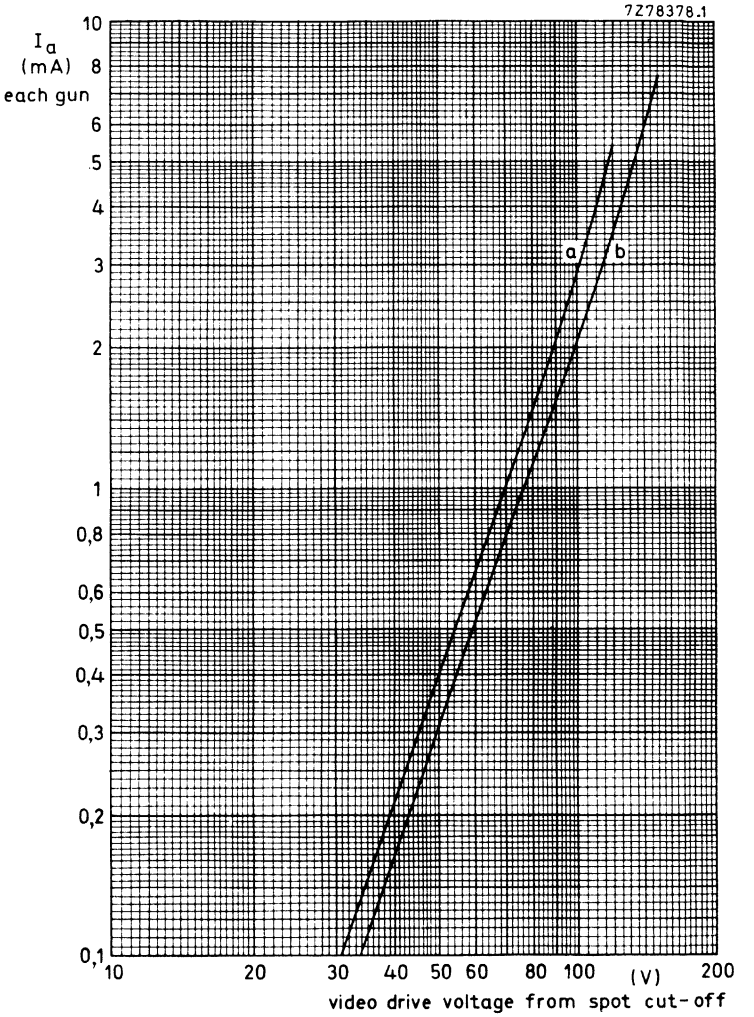

Typical cathode drive characteristics.

V_f = 6,3 V;

$V_{a,g4}$ = 25 kV;

V_{g3} adjusted for focus;

V_{g2} adjusted to provide spot cut-off for desired fixed V_k.

curve a = spot cut-off = 120 V;

curve b = spot cut-off = 150 V.

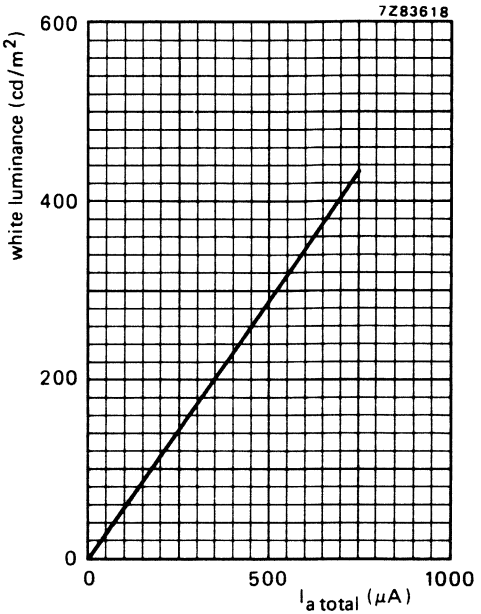

Luminance at the centre of the screen as a function of I_{total}.
$V_{a,g4}$ = 25 kV, V_f = 6,3 V, V_{g3} adjusted for optimum focus.
Scanned area = 322,1 mm x 241,6 mm;
CIE co-ordinates x = 0,313, y = 0,329.

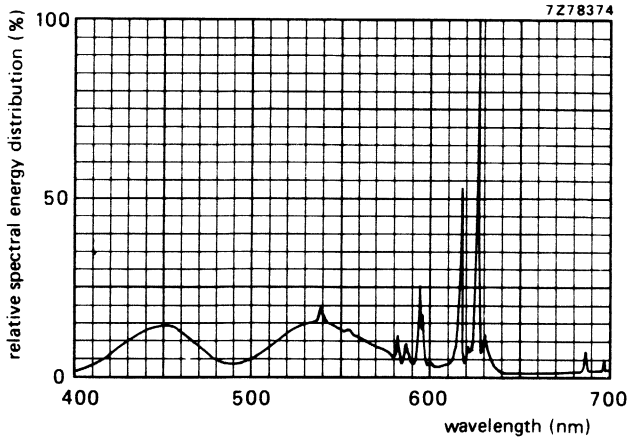

Simultaneous excitation of red, green and blue phosphor, measured in a tube, to produce white of x = 0,313, y = 0,329. Exact shape of the peaks depends on the resolution of the measuring apparatus.

Colour co-ordinates:	x	y
red	0,635	0,340
green	0,315	0,600
blue	0,150	0,060

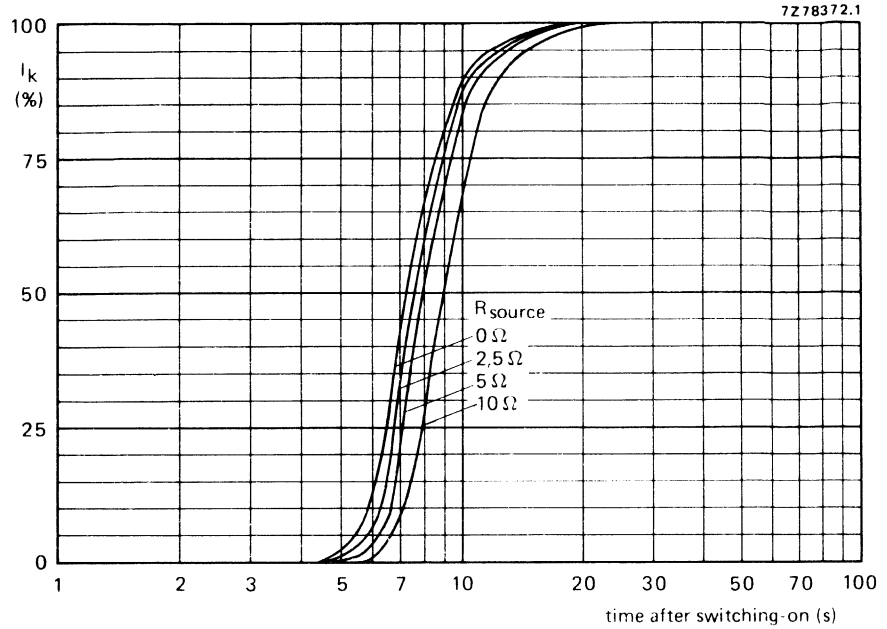

Cathode heating time after switching on, measured under typical operating conditions.

DEGAUSSING

The picture tube is provided with an internal magnetic shield. This shield and the shadow mask with its suspension system may be provided with an automatic degaussing system, consisting of one magnetic coil winding mounted on the cone of the picture tube.

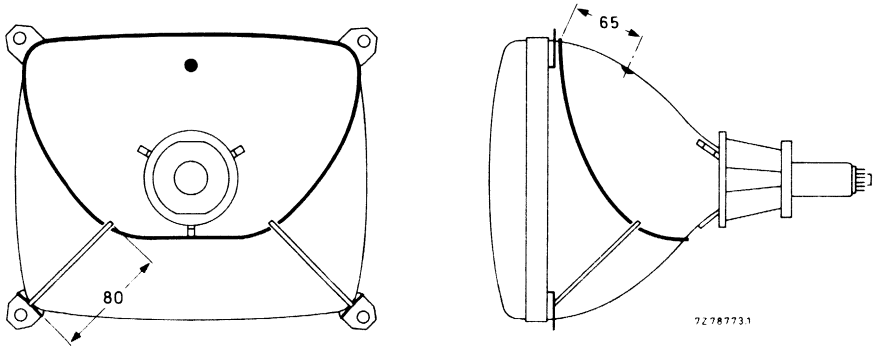

Position of degaussing coil on the picture tube; dimensions are given in mm.

For proper degaussing an initial magnetomotive force (m.m.f.) of 600 ampere-turns is required in the coil. This m.m.f. has to be gradually decreased by appropriate degaussing circuitry. In the steady state, no significant m.m.f. should remain in the coil ($\leqslant$ 0,6 ampere-turns). If single-phase power rectification is employed in the t.v. circuitry, provision should be included to prevent asymmetric distortion of the a.c. voltage applied to the degaussing circuit due to high d.c. inrush currents. An example of a degaussing circuit and coil data for various mains voltages are given below.

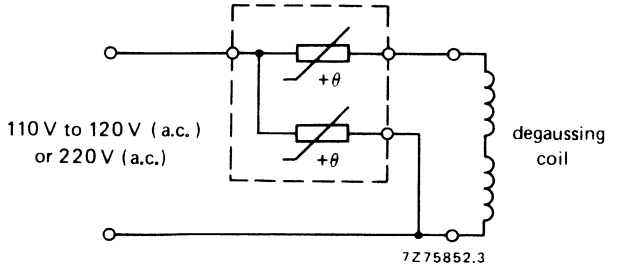

Degaussing circuit using dual PTC thermistor.

Data of degaussing coil

	110 V (a.c.) mains	220 V (a.c.) mains
Circumference	105 cm	105 cm
Number of turns	70	120
Copper-wire diameter	0,5 mm	0,35 mm
Resistance	6,3 Ω	22,3 Ω
Catalogue number of appropriate dual PTC thermistor	8222 298 73091	2322 662 98009

DEFLECTION UNIT

QUICK REFERENCE DATA

Picture tube	
gun arrangement	in line
diagonal	42 cm (16 in)
neck diameter	29,1 mm
Deflection angle	90°
Line deflection current, edge to edge at 25 kV	2,75 A (p-p)
Inductance of line coils, parallel connected	2,3 mH
Field deflection current, edge to edge at 25 kV	0,87 A (p-p)
Resistance of field coils, parallel connected	12,2 Ω

APPLICATION

This deflection unit, in conjunction with devices for colour purity and static convergence, is for 90° in-line colour picture tube A42-570X, with a neck diameter of 29,1 mm.

DESCRIPTION

The deflection unit consists of saddle-shaped line deflection coils and toroidal wound field deflection coils, thus forming a hybrid yoke. The unit has a metal non-magnetic clamping ring at the rear, to fix the deflection unit on the neck of the picture tube. With the deflection unit positioned axially for optimum purity, a clearance is available at the front which permits adjustment of convergence by tilting the unit in the vertical and/or horizontal plane. Wedges are recommended to secure the deflection unit in the chosen position.

MECHANICAL DATA

Dimensions in mm

Outlines

The deflection unit fits a tube with a neck diameter of $29{,}1\ ^{+0{,}9}_{-0{,}7}$ mm.

For correct fitting the tube neck should be provided with adhesive tape.

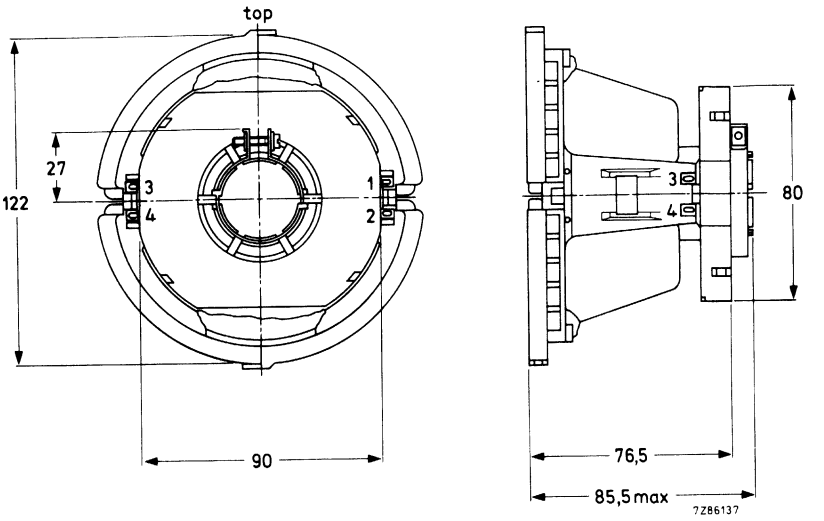

Fig. 1.

Maximum operating temperature (average copper temperature measured with resistance method)	+ 90 °C
Storage temperature range	−20 to + 90 °C
Flame retardent	according to UL 1413, category 94-V1
Torque on neck clamp screw	1,4 Nm

ENVIRONMENTAL TEST SPECIFICATIONS

Vibration	IEC 68-2-6 (test Fc)
Bump	IEC 68-2-29 (test Eb; 35g)
Cold	IEC 68-2-1 (test Ab)
Dry heat	IEC 68-2-2 (test Bb)
Damp heat, steady state	IEC 68-2-3 (test Ca)
Cyclic damp heat	IEC 68-2-30 (test Db)
Change of temperature	IEC 68-2-14 (test Nb)

ELECTRICAL DATA

Line coils	
Inductance at 1 V (r.m.s.), 1 kHz	2,3 mH ± 5%
Resistance at 25 °C	2,25 Ω ± 10%
Line deflection current, edge to edge, at 25 kV	2,75 A(p-p)
Field coils	
Inductance at 1 V (r.m.s.), 1 kHz	23 mH ± 10%
Resistance at 25 °C	12,2 Ω ± 7%
Field deflection current, edge to edge, at 25 kV	0,87 A(p-p)
Cross-talk	a voltage of 10 V, 15750 Hz applied to the line coils causes no more than 0,2 V across the field coils (damping resistors included)
Insulation resistance at 1 kV (d.c.)	
between line and field coils	> 500 MΩ
between line coil and core clamp	> 500 MΩ
between field coil and core clamp	> 10 MΩ

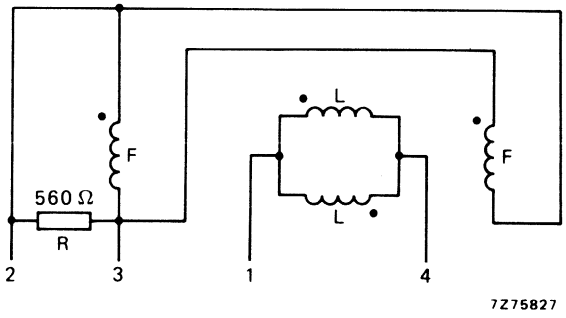

Fig. 2 Connection diagram, L = Line, F = Field.

ADJUSTMENT

- Adjust the static convergence with the four and six-pole magnets of the multipole unit AT1052 for the relative movement of the beams under influence of a four or six-pole magnet.
- Adjust colour purity by axial movement of the deflection yoke and adjustment of the two-pole magnets for centring of the beams.
- Tighten the screw of the clamping ring on the deflection yoke to secure the axial position of the unit on the picture tube.
- Readjust, if necessary, the convergence with the four and six-pole magnets.
- Tilt the unit in either horizontal or vertical direction, or in both directions so that blue, green and red lines converge at the end of the horizontal and vertical axis.
- This position of the unit has to be secured by three rubber wedges placed between the picture tube and the deflection unit. These wedges have to be cemented on to the picture tube.

Replaces A42-590X ←

Hi-Bri COLOUR PICTURE TUBE

- 90° deflection
- In-line gun, thermally stable; electrostatic hi-bi-potential focus
- 29,1 mm neck diameter
- Hi-Bri screen with pigmented phosphor featuring high brightness and increased contrast performance
- Soft-Flash technology offering improved set reliability
- Slotted shadow mask optimized for minimum moiré
- Fine pitch over entire screen
- Phosphor lines follow glass contour
- Quick-heating cathodes
- Internal magnetic shield
- Reinforced envelope for push-through mounting
- When combined with an appropriate hybrid saddle toroidal deflection unit (e.g. AT1216 or AT1470), it forms a self-converging and raster correction free assembly.

QUICK REFERENCE DATA

Deflection angle	90°
Face diagonal	42 cm
Overall length	374 mm
Neck diameter	29,1 mm
Heating	6,3 V, 685 mA
Focusing voltage	28% of anode voltage

ELECTRON-OPTICAL DATA

Electron gun system		unitized triple-aperture electrodes
Focusing method		electrostatic
Focus lens		hi-bi-potential
Deflection method		magnetic
Deflection angles		
diagonal		approx. 90°
horizontal		approx. 78°
vertical		approx. 60°

ELECTRICAL DATA

Capacitances		
anode to external conductive coating including rimband	$C_{a(m+m')}$	max. 1600 pF min. 1000 pF
grid 1 to all other electrodes	C_{g1}	17 pF
cathode of each gun to all other electrodes	C_{kR}, C_{kG}, C_{kB}	5 pF
focusing electrode to all other electrodes	C_{g3}	6 pF
Heating		indirect by a.c. or d.c.
heater voltage	V_f	6,3 V
heater current	I_f	685 mA

OPTICAL DATA

Screen	metal-backed vertical phosphor stripes; phosphor lines follow glass contour
Screen finish	satinized
Useful screen dimensions	
diagonal	min. 382,3 mm
horizontal axis	min. 322,1 mm
vertical axis	min. 241,6 mm
area	min. 755 cm^2
Phosphors	
red	pigmented europium activated rare earth
green	sulphide type
blue	pigmented sulphide type
Centre-to-centre distance of vertical identical colour phosphor stripes, at screen centre	0,70 mm
Light transmission of face glass at centre	66,8%

MECHANICAL DATA (see also the figures on the following pages)

Overall length	373,6 ± 5 mm
Neck diameter	$29{,}1\ ^{+1{,}4}_{-0{,}7}$ mm *
Bulb dimensions	
diagonal	max. 418,8 mm
width	max. 360,6 mm
height	max. 281,8 mm
Base	10-pin base JEDEC B10-277
Anode contact	small cavity contact J1-21, IEC 67-III-2
Mounting position	anode contact on top
Net mass	approx. 8 kg

Handling

During shipment and handling the tube should not be subjected to accelerations greater than 35 g in any direction.

* In the region of 70 mm from the neck end, the maximum diameter is 30 mm.

MECHANICAL DATA (continued)

Dimensions in mm

Notes are given after the drawings.

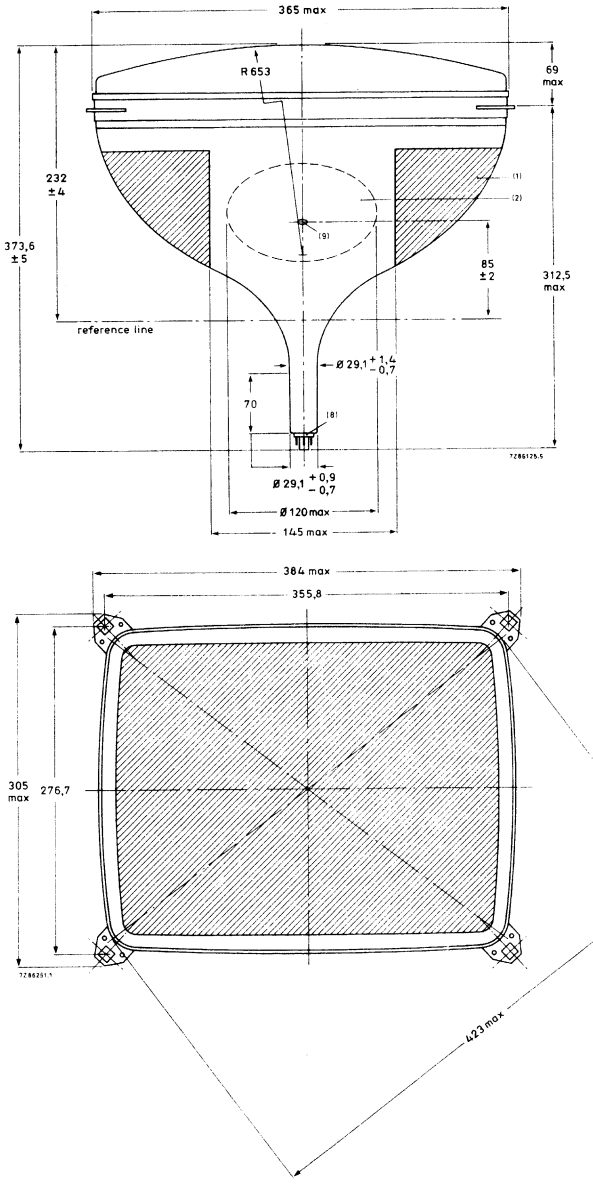

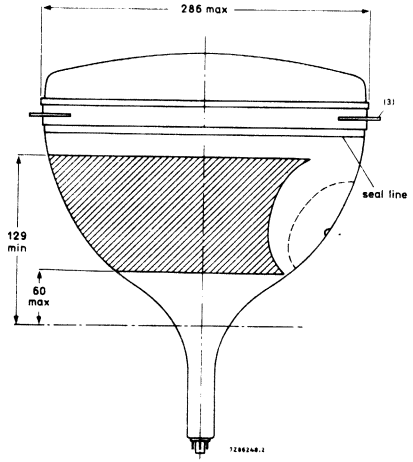
286 max
(3)
seal line
129
min
60
max

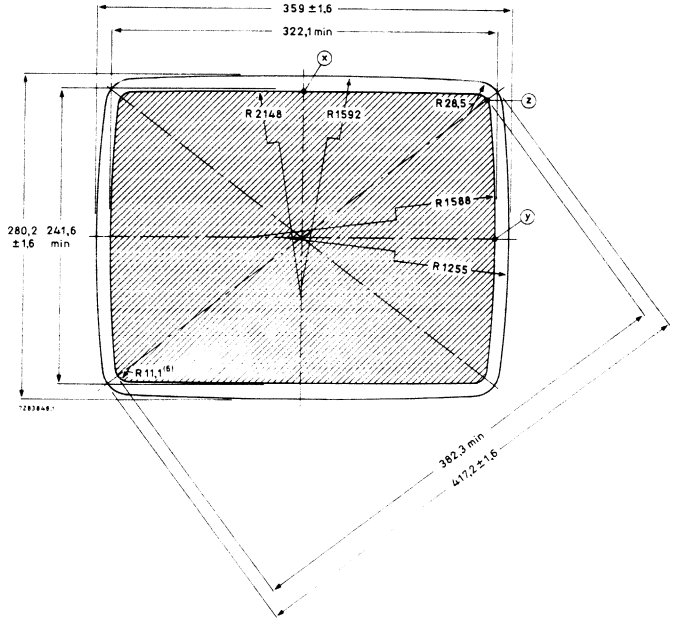
359 ±1,6
322,1 min
X
Z
Y
R 2148
R1592
R26,5
R1588
R1255
280,2
±1,6
241,6
min
R 11,1 (6)
382,3 min
417,2 ±1,6

MECHANICAL DATA (continued)

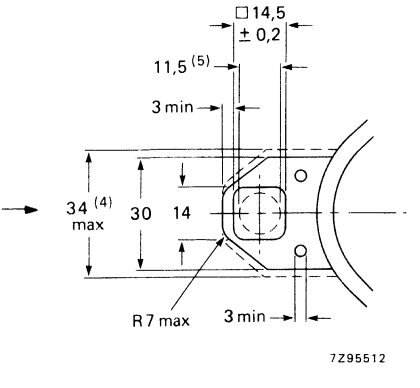

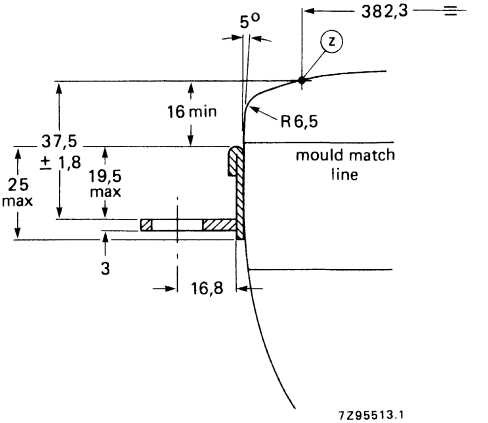

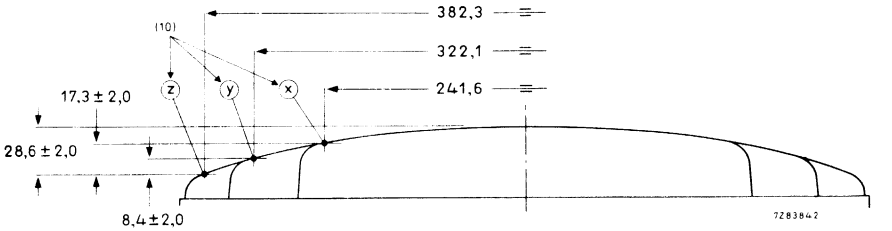

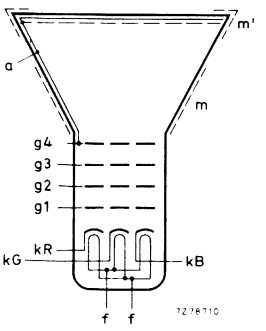

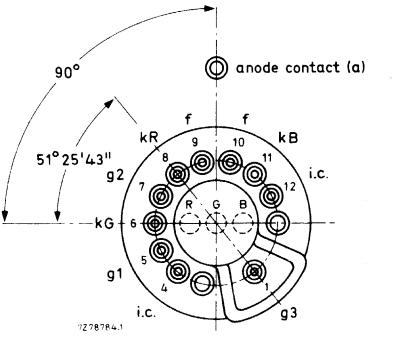

i.c. = internally connected
(not to be used)

Notes to outline drawings on the preceding pages

1. Configuration of outer conductive coating may be different, but will contain the contact area as shown in the drawing.
2. To clean this area, wipe only with a soft lintless cloth.
3. One of the four mounting lugs may deviate (1,5 mm max.) from the plane of the other three lugs. This deviation is incorporated in the tolerance of ± 1,8 mm.
4. Minimum space to be reserved for mounting lug.
5. The position of the mounting screw in the cabinet must be within a circle of 11,5 mm diameter drawn around the true geometrical positions, i.e. the corners of a rectangle of 355,8 mm x 276,7 mm.
6. Co-ordinates for radius R = 11,1 mm: x = 146,52 mm, y = 104,72 mm.
7. Not applicable.
8. The socket for this base should not be rigidly mounted; it should have flexible leads and be allowed to move freely. After mounting of the tube in the cabinet note that the position of the base can fall within a circle, having a diameter of max. 50 mm, concentric with an imaginary tube axis.
9. Small cavity contact J1-21, IEC67-III-2.
10. The X, Y and Z reference points are located on the outside surface of the face plate at the intersection of the minor, major and diagonal screen axis respectively, with the minimum published screen.

Reference line gauge; GR90CJ4

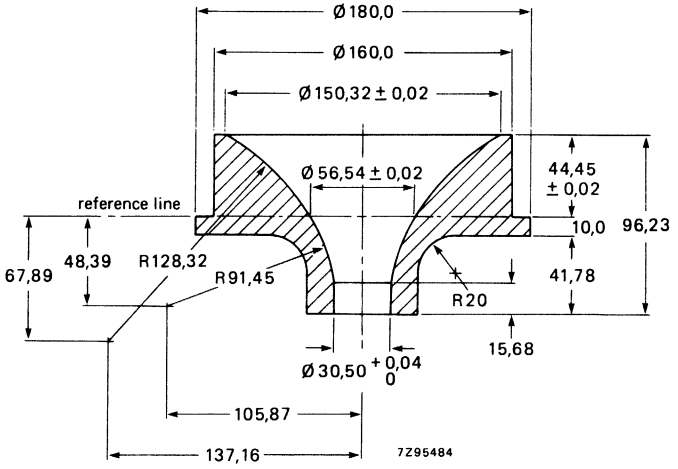

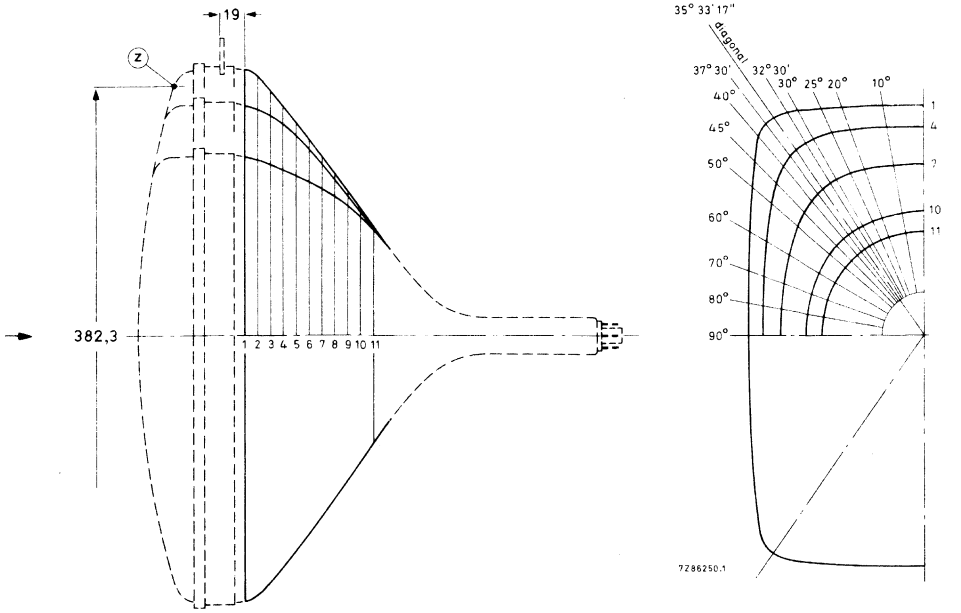

section	nom. distance from section 1	distance from centre (max. values)														
		0°	10°	20°	25°	30°	32°30'	diag. axes	37°30'	40°	45°	50°	60°	70°	80°	90°
Dimensions in mm																
1	0	179,1	181,5	189,1	195,0	202,1	205,7	208,5	207,8	203,3	189,6	177,2	159.0	147,6	141,3	139,3
2	10	176,1	178,4	185,4	190,7	196,9	199,9	201,9	200,9	196,4	183,9	172,5	155,4	144.4	138,4	136,5
3	20	170,8	172,8	178,7	182,9	187,5	189,3	190,0	188,9	185,4	175,4	165,5	150,0	139,9	134,2	132,4
4	30	164,1	165,8	170,8	174,1	177,2	178,2	177,9	176,7	173,9	166,0	157,8	144,2	135,1	129,9	128,2
5	40	155,6	157,1	161,4	164,0	166,1	166,4	165,6	164,3	161,9	155,7	149,1	137,9	130,0	125,4	123,9
6	50	145,1	146,5	150,1	152,2	153,6	153,6	152,8	151,7	149,9	145,1	140,1	131,1	124,5	120,6	119,3
7	60	133,6	134,7	137,4	138,9	139,9	140,0	139,5	138,9	137,8	134,6	130,9	123,8	118,6	115,4	114,3
8	70	121,8	122,6	124,4	125,3	125,9	125,9	125,8	125,6	125,1	123,5	121,3	116,4	112,2	109,6	108,7
9	80	109,5	110,0	110,9	111,3	111,6	111,6	111,6	111,6	111,5	110,9	110.1	107,6	105,0	103,1	102,4
10	90	96,5	96,6	96,8	96,9	97,0	97,1	97,1	97.2	97,2	97,1	97,0	96,3	95,4	94,5	94,1
11	100	82,2	82,1	82,1	82,1	82,2	82,2	82,2	82,2	82,2	82,2	82,2	82,2	82,2	82,2	82,1

10-pin base; JEDEC B10-277

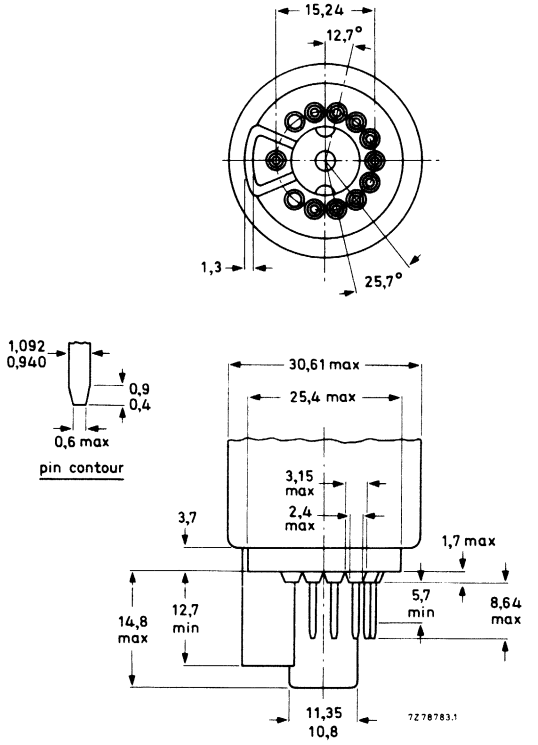

TYPICAL OPERATING CONDITIONS

The voltages are specified with respect to grid 1.

Anode voltage	$V_{a,g4}$	25 kV
Grid 3 (focusing electrode) voltage	V_{g3}	6,6 to 7,5 kV
Grid 2 voltage for a spot cut-off voltage V_K = 140 V	V_{g2}	390 to 760 V
Luminance at the centre of the screen*	L	180 cd/m²

* Tube settings adjusted to produce white of 6500K + 7 M.P.C.D. (x = 0,313, y = 0,329) focused raster, current density 0,4 μA/cm².

EQUIPMENT DESIGN VALUES

The values are valid for anode voltages between 20 and 27,5 kV.
The voltages are specified with respect to grid 1.

Grid 3 (focusing electrode) voltage	V_{g3}	26,6 to 29,8% of anode voltage
Grid 2 voltage and cathode voltage for visual extinction of focused spot	V_{g2} and V_k	see cut-off design chart *
Difference in cut-off voltages between guns in any tube	ΔV_k	lowest value > 80% of highest value
Video drive characteristics		see graphs **
Grid 3 (focusing electrode) current	I_{g3}	−5 to + 5 μA
Grid 2 current	I_{g2}	−5 to + 5 μA
Grid 1 current under cut-off conditions	I_{g1}	−5 to + 5 μA

To produce white of 6500K + 7 M.P.C.D.
(CIE co-ordinates x = 0,313, y = 0,329)

Percentage of the total anode current supplied by each gun (typical)

red gun	38,3%
green gun	35,8%
blue gun	25,9%

Ratio of anode currents

red gun to green gun	min.	0,8
	average	1,1
	max.	1,4
red gun to blue gun	min.	1,1
	average	1,5
	max.	1,9
blue gun to green gun	min.	0,5
	average	0,7
	max.	0,9

* The common V_{g2} should be adjusted as follows:
Set the cathode voltage, V_k, for each gun at 150 V. Increase the V_{g2} from about 400 V to the value at which the raster of one of the guns becomes just visible. Now decrease the V_k of the remaining guns so that the rasters of these guns also become visible.

** For optimum picture performance it is recommended that the cathodes are not driven below + 10 V.

LIMITING VALUES (Design maximum rating system unless otherwise stated)

The voltages are specified with respect to grid 1.

Anode voltage	$V_{a,g4}$	max.	27,5	kV	notes 1, 2, 3
		min.	20	kV	notes 1 and 4
Long-term average current for three guns	I_a	max.	750	μA	note 5
Grid 3 (focusing electrode) voltage	V_{g3}	max.	11	kV	
Grid 2 voltage, peak	V_{g2p}	max.	1000	V	
Cathode voltage					
positive	V_k	max.	400	V	
positive operating cut-off	V_k	max.	200	V	
negative	$-V_k$	max.	0	V	
negative peak	$-V_{kp}$	max.	2	V	
Heater voltage	V_f	6,3 V	+ 5 −10	% %	notes 1 and 6
Heater-cathode voltage					
heater negative with respect to cathode					
during equipment warm-up period not exceeding 15 s	V_{kf}	max.	450	V	note 1
after equipment warm-up period	V_{kf}	max.	250	V	
heater positive with respect to cathode	$-V_{kfp}$	peak	200	V	note 1
	$-V_{kf}$	max. (d.c. component value)	0	V	

Notes

1. Absolute maximum rating system.
2. The X-ray dose rate remains below the acceptable value of 0,5 mR/h, measured with ionization chamber when the tube is used within its limiting values.
3. During adjustment on the production line this value is likely to be surpassed considerably. It is therefore strongly recommended to first make the necessary adjustments for normal operation without picture tube.
4. Operation of the tube at lower voltages impairs the luminance and resolution.
5. The short-term average anode current should be limited by circuitry to 1000 μA.
6. For maximum cathode life and optimum performance, it is recommended that the heater supply be designed for 6,3 V at zero beam current.

FLASHOVER PROTECTION

With the high voltage used with this tube (max. 27,5 kV) internal flashovers may occur. As a result of the Soft-Flash technology these flashover currents are limited to approx. 60 A offering higher set reliability, optimum circuit protection and component savings.
Primary protective circuitry using properly grounded spark gaps and series isolation resistors (preferably carbon composition) is still necessary to prevent tube damage. The spark gaps should be connected to all picture tube electrodes at the socket according to the figure below; they are not required on the heater pins. No other connections between the outer conductive coating and the chassis are permissible.
The spark gaps should be designed for a breakdown voltage at the focusing electrode (g3) of 11 kV (1,5 x V_{g3} max. at $V_{a,g4}$ = 25 kV), and at the other electrodes of 1,5 to 2 kV.
The values of the series isolation resistors should be as high as possible (min. 1,5 kΩ) without causing deterioration of the circuit performance. The resistors should be able to withstand an instantaneous surge of 20 kV for the focusing circuit and 12 kV for the remaining circuits without arcing.
Additional information is available on request.

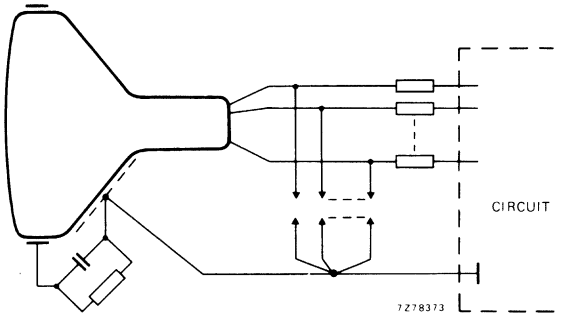

BEAM CORRECTIONS

Maximum required correction for register, as measured at the centre of the screen in any direction	0,08 mm
Centre convergence displacement of the blue and red beams is contained within a circle; max. diameter of circle	4,5 mm
Centre convergence displacement between the green beam and converged blue and red beams is contained within a circle; maximum diameter of circle	2,3 mm
Maximum centring error in any direction after colour purity, static convergence, and horizontal centre line correction, measured with deflection coils in nominal position	5 mm

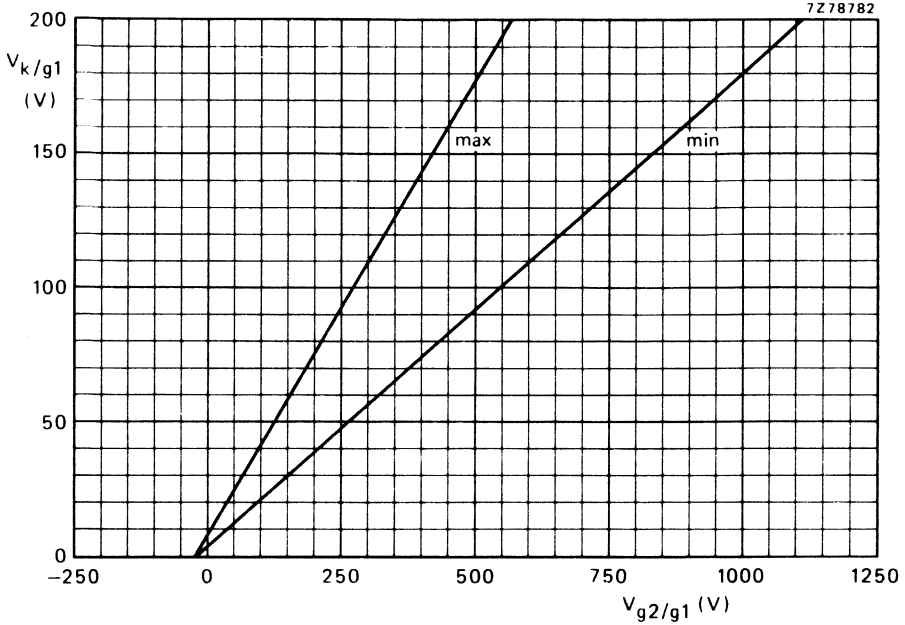

Spot cut-off design chart (cathode drive), V_{g3} adjusted for focus, $V_{a,g4}$ = 20 to 27,5 kV.

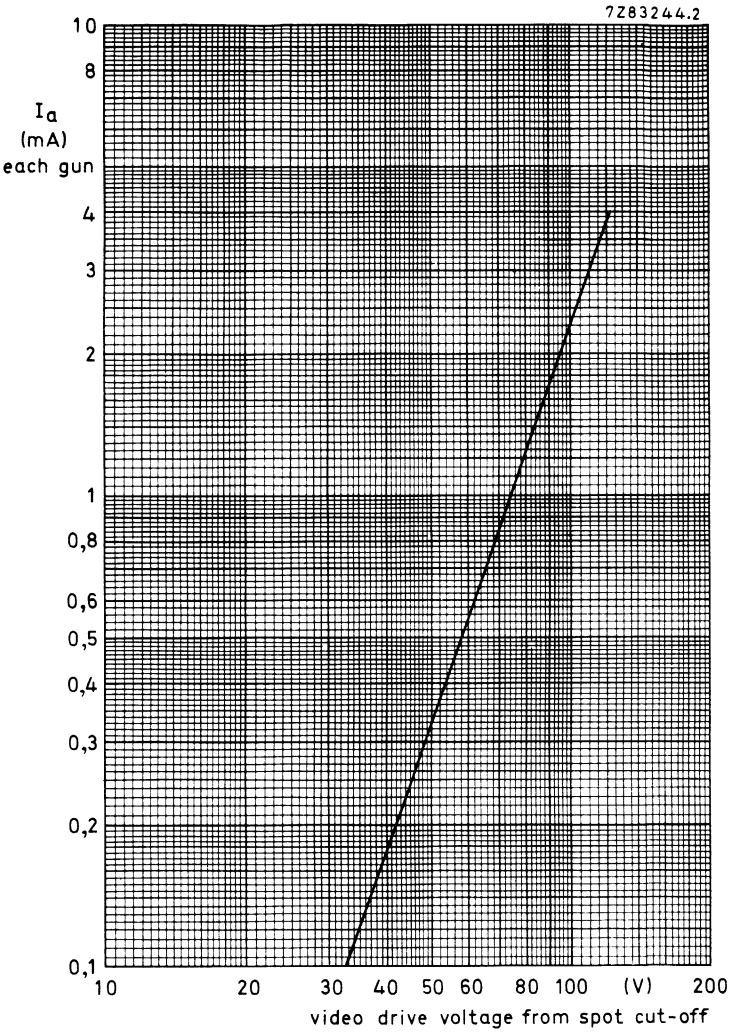

Typical cathode drive characteristics.

V_f = 6,3 V;

$V_{a,g4}$ = 25 kV;

V_{g3} adjusted for focus;

V_{g2} adjusted to provide spot cut-off for V_k = 140 V.

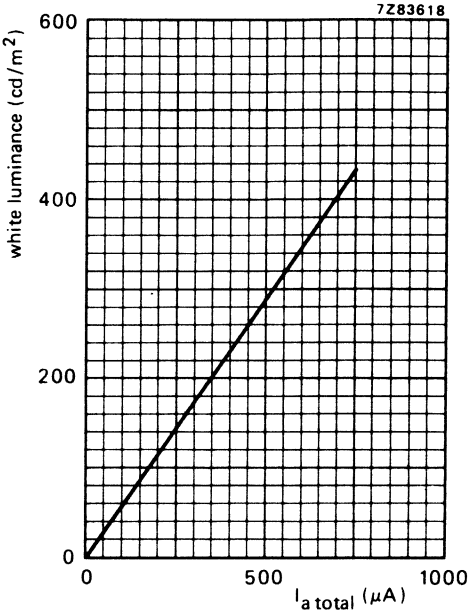

Luminance at the centre of the screen as a function of I_{total}.
$V_{a,g4}$ = 25 kV, V_f = 6,3 V, V_{g3} adjusted for optimum focus.
Scanned area = 322,1 mm x 241,6 mm;
CIE co-ordinates x = 0,313, y = 0,329.

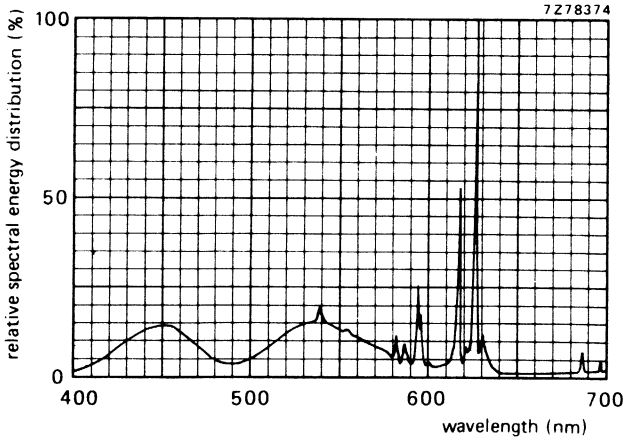

Simultaneous excitation of red, green and blue phosphor, measured in a tube, to produce white of x = 0,313, y = 0,329. Exact shape of the peaks depends on the resolution of the measuring apparatus.

Colour co-ordinates:	x	y
red	0,635	0,340
green	0,315	0,600
blue	0,150	0,060

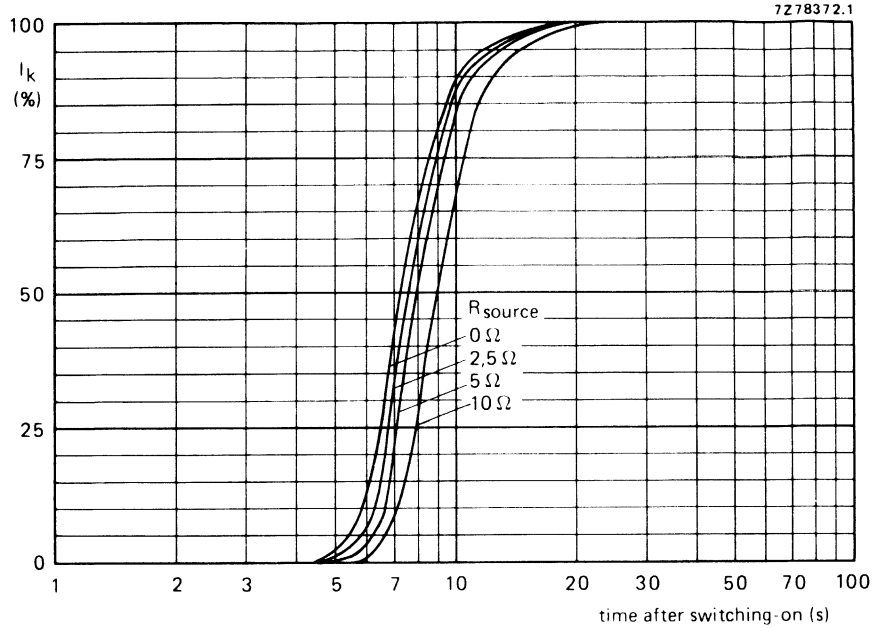

Cathode heating time after switching on, measured under typical operating conditions.

DEGAUSSING

The picture tube is provided with an internal magnetic shield. This shield and the shadow mask with its suspension system may be provided with an automatic degaussing system, consisting of one magnetic coil winding mounted on the cone of the picture tube.

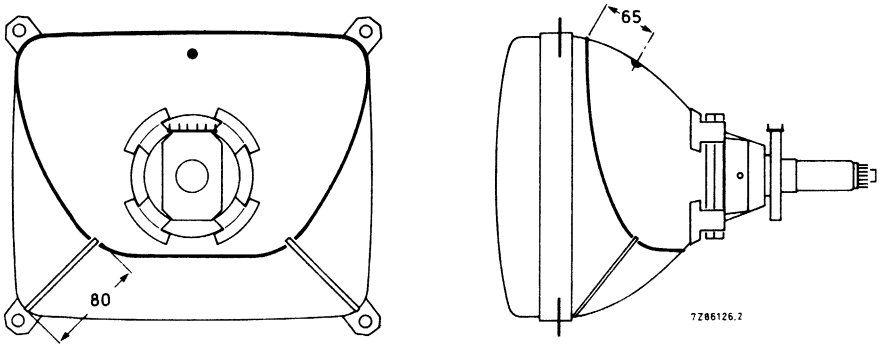

Position of degaussing coil on the picture tube; dimensions are given in mm.

For proper degaussing an initial magnetomotive force (m.m.f.) of 600 ampere-turns is required in the coil. This m.m.f. has to be gradually decreased by appropriate degaussing circuitry. In the steady state, no significant m.m.f. should remain in the coil ($\leqslant$ 0,6 ampere-turns). If single-phase power rectification is employed in the t.v. circuitry, provision should be included to prevent asymmetric distortion of the a.c. voltage applied to the degaussing circuit due to high d.c. inrush currents. An example of a degaussing circuit and coil data for various mains voltages are given below.

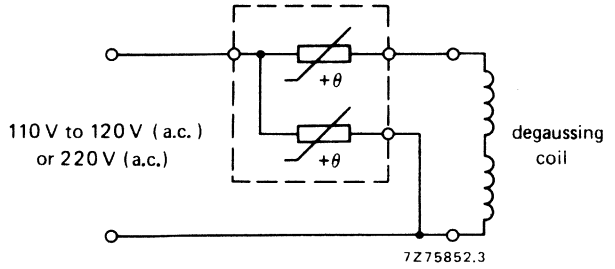

Degaussing circuit using dual PTC thermistor.

Data of degaussing coil

	110 V (a.c.) mains	220 V (a.c.) mains
Circumference	105 cm	105 cm
Number of turns	70	120
Copper-wire diameter	0,5 mm	0,35 mm
Resistance	6,3 Ω	22,3 Ω
Catalogue number of appropriate dual PTC thermistor	8222 298 73091	2322 662 98009

DEFLECTION UNIT

- **Raster Correction Free**

QUICK REFERENCE DATA

Picture tube	
gun arrangement	in line
diagonal	42 cm (16 in)
neck diameter	29,1 mm
Deflection angle	90°
Line deflection current, edge to edge at 25 kV	3,28 A (p-p)
Inductance of line coils, parallel connected	1,73 mH
Field deflection current, edge to edge at 25 kV	0,94 A (p-p)
Resistance of field coils, parallel connected	11 Ω

APPLICATION

This deflection unit, in conjunction with devices for colour purity and static convergence is for 90° in-line colour picture tube A42-592X, with a neck diameter of 29,1 mm. ←
The unit requires no raster correction circuitry.

DESCRIPTION

The deflection unit consists of saddle-shaped line deflection coils, toroidal wound field deflection coils, and metal fins, thus forming a raster correction free hybrid yoke. The unit has a metal non-magnetic clamping ring at the rear, to fix the deflection unit on the neck of the picture tube.

MECHANICAL DATA

Dimensions in mm

Outlines

The deflection unit fits a tube with a neck diameter of 29,1 $^{+0,9}_{-0,7}$ mm.

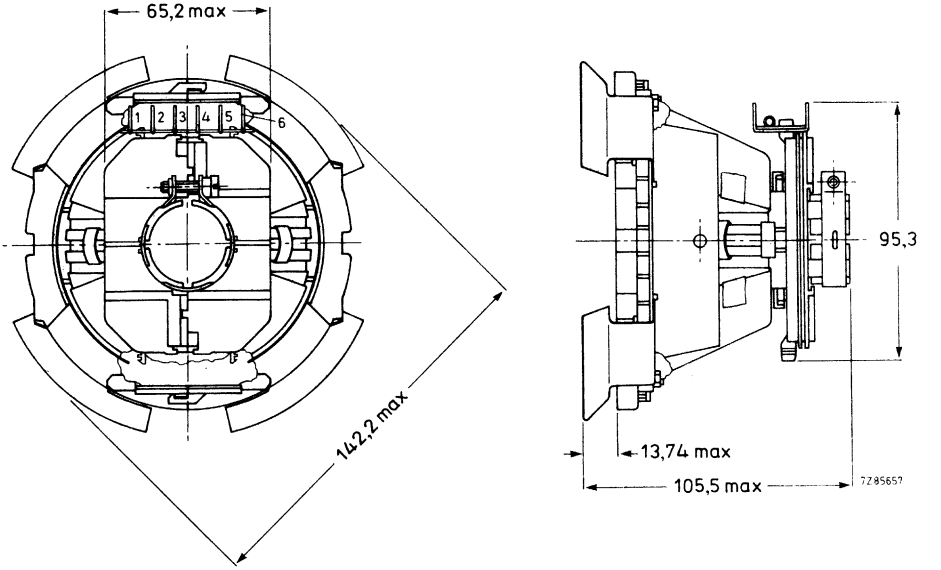

Fig. 1.

Maximum operating temperature (average copper temperature measured with resistance method)	+ 90 °C
Storage temperature range	−20 to + 90 °C
Flame retardent	according to UL 1413, category 94-V1
Torque on neck clamp screw	1,4 Nm

ENVIRONMENTAL TEST SPECIFICATIONS

Vibration	IEC 68-2-6 (test Fc)
Bump	IEC 68-2-29 (test Eb; 35g)
Cold	IEC 68-2-1 (test Ab)
Dry heat	IEC 68-2-2 (test Bb)
Damp heat, steady state	IEC 68-2-3 (test Ca)
Cyclic damp heat	IEC 68-2-30 (test Db)
Change of temperature	IEC 68-2-14 (test Nb)

ELECTRICAL DATA

Line coils	parallel connected
Inductance at 1 V (r.m.s.), 1 kHz	1,73 mH ± 5%
Resistance at 25 °C	1,79 Ω ± 10%
Line deflection current, edge to edge at 25 kV	3,28 A (p-p)
Voltage during line scan, edge to edge, at 25 kV, scan period 52,5 μs	109 V
Field coils	parallel connected
Inductance at 1 V (r.m.s.), 1 kHz	29,1 mH ± 10%
Resistance at 25 °C	11 Ω ± 7%
Field deflection current, edge to edge at 25 kV	0,94 A (p-p)
Cross-talk	a voltage of 10 V, 15625 Hz applied to the line coils causes no more than 0,2 V across the field coils (damping resistors included)
Insulation resistance at 1 kV (d.c.)	
between line and field coils	> 500 MΩ
between line coil and core clamp	> 500 MΩ
between field coil and core clamp	> 10 MΩ

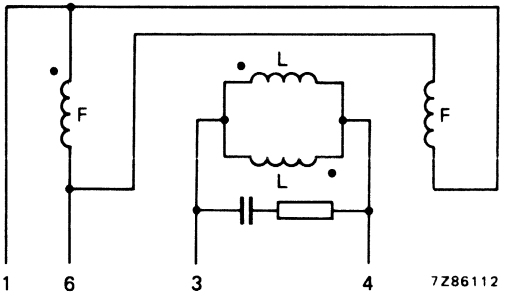

Fig. 2 Connection diagram, L = Line, F = Field.

ADJUSTMENT

- Adjust the static convergence with the four and six-pole magnets of the multipole unit AT1052 for the relative movement of the beams under influence of a four or six-pole magnet.
- Adjust colour purity by axial movement of the deflection yoke and adjustment of the two-pole magnets for centring of the beams.
- Tighten the screw of the clamping ring on the deflection yoke to secure the axial position of the unit on the picture tube.
- Readjust, if necessary, the convergence with the four and six-pole magnets.
- Tilt the unit in either horizontal or vertical direction, or in both directions so that blue, green and red lines converge at the end of the horizontal and vertical axis.
- This position of the unit has to be secured by three rubber wedges placed between the picture tube and the deflection unit. These wedges have to be cemented on to the picture tube.

DEFLECTION UNIT

- **Raster Correction Free**

QUICK REFERENCE DATA

Picture tube	
gun arrangement	in line
diagonal	42 cm (16 in)
neck diameter	29,1 mm
Deflection angle	90°
Line deflection current, edge to edge at 25 kV	3,04 A(p-p)
Inductance of line coils, parallel connected	1,89 mH
Field deflection current, edge to edge at 25 kV	0,9 A(p-p)
Resistance of field coils, parallel connected	13,9 Ω

APPLICATION

This deflection unit, in conjunction with devices for colour purity and static convergence is for 90° in-line colour picture tube A42-592X, with a neck diameter of 29,1 mm.
The unit requires no raster correction circuitry.

DESCRIPTION

The deflection unit consists of saddle-shaped line deflection coils, toroidal wound field deflection coils and metal fins, thus forming a raster correction free hybrid yoke. The unit has a metal non-magnetic clamping ring at the rear, to fix the deflection unit on the neck of the picture tube.

MECHANICAL DATA

Dimensions in mm

Outlines

The deflection unit fits a tube with a neck diameter of $29{,}1\ ^{+0{,}9}_{-0{,}7}$ mm.

For correct fitting the tube neck should be provided with adhesive tape.

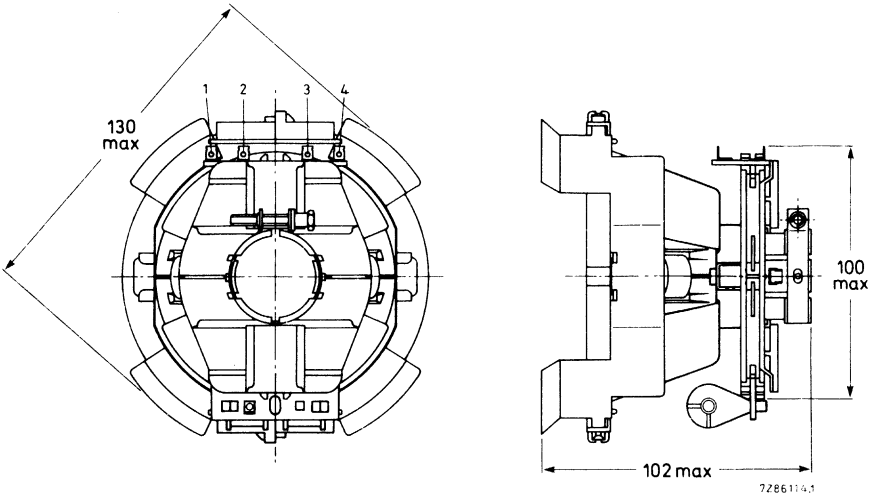

Fig. 1.

Maximum operating temperature (average copper temperature measured with resistance method)	+ 90 °C
Storage temperature range	−20 to + 90 °C
Flame retardent	according to UL 1413, category 94-V1
Torque on neck clamp screw	1,4 Nm

ENVIRONMENTAL TEST SPECIFICATIONS

Vibration	IEC 68-2-6 (test Fc)
Bump	IEC 68-2-29 (test Eb; 35g)
Cold	IEC 68-2-1 (test Ab)
Dry heat	IEC 68-2-2 (test Bb)
Damp heat, steady state	IEC 68-2-3 (test Ca)
Cyclic damp heat	IEC 68-2-30 (test Db)
Change of temperature	IEC 68-2-14 (test Nb)

ELECTRICAL DATA

Line coils	parallel connected
Inductance at 1 V (r.m.s.), 1 kHz	1,89 mH ± 5%
Resistance at 25 °C	2,6 Ω ± 10%
Line deflection current, edge to edge, at 25 kV	3,04 A (p-p)
Voltage during line scan, edge to edge, at 25 kV, scan period 52,5 μs	109 V
Field coils	parallel connected
Inductance at 1 V (r.m.s.), 1 kHz	29 mH ± 10%
Resistance at 25 °C	13,9 Ω ± 7%
Field deflection current, edge to edge, at 25 kV	0,9 A (p-p)
Cross-talk	a voltage of 10 V, 15625 Hz applied to the line coils causes no more than 0,2 V across the field coils (damping resistors included)
Insulation resistance at 1 kV (d.c.)	
between line and field coils	> 500 MΩ
between line coil and core clamp	> 500 MΩ
between field coil and core clamp	> 10 MΩ

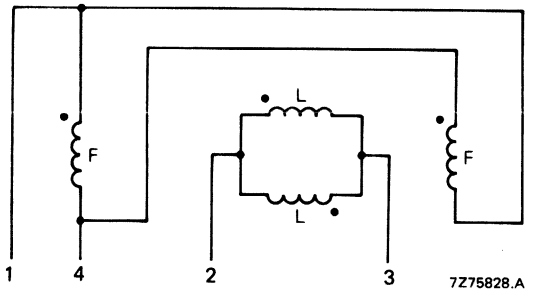

Fig. 2 Connection diagram, L = Line, F = Field.

ADJUSTMENT

- Adjust the static convergence with the four and six-pole magnets of the multipole unit AT1052 for the relative movement of the beams under influence of a four or six-pole magnet.
- Adjust colour purity by axial movement of the deflection yoke and adjustment of the two-pole magnets for centring of the beams.
- Tighten the screw of the clamping ring on the deflection yoke to secure the axial position of the unit on the picture tube.
- Readjust, if necessary, the convergence with the four and six-pole magnets.
- Tilt the unit in either horizontal or vertical direction, or in both directions so that blue, green and red lines converge at the end of the horizontal and vertical axis.
- This position of the unit has to be secured by three rubber wedges placed between the picture tube and the deflection unit. These wedges have to be cemented on to the picture tube.

Replaces A42-591X ←

Hi-Bri COLOUR PICTURE TUBE

- 90° deflection
- In-line gun, thermally stable; electrostatic hi-bi-potential focus
- 29,1 mm neck diameter
- Hi-Bri screen with pigmented phosphor featuring high brightness and increased contrast performance
- Soft-Flash technology offering improved set reliability
- Slotted shadow mask optimized for minimum moiré
- Fine pitch over entire screen
- Phosphor lines follow glass contour
- Quick-heating cathodes
- Internal magnetic shield
- Reinforced envelope for push-through mounting
- When combined with an appropriate hybrid saddle toroidal deflection unit (e.g. AT1216 or AT1470), it forms a self-converging and raster correction free assembly.

QUICK REFERENCE DATA

Deflection angle	90°
Face diagonal	42 cm
Overall length	378 mm
Neck diameter	29,1 mm
Heating	6,3 V, 685 mA
Focusing voltage	28% of anode voltage

ELECTRON-OPTICAL DATA

Electron gun system		unitized triple-aperture electrodes
Focusing method		electrostatic
Focus lens		hi-bi-potential
Deflection method		magnetic
Deflection angles		
diagonal		approx. 90°
horizontal		approx. 78°
vertical		approx. 60°

ELECTRICAL DATA

Capacitances		
anode to external conductive coating including rimband	$C_{a(m+m')}$	max. 1600 pF min. 1000 pF
grid 1 to all other electrodes	C_{g1}	17 pF
cathode of each gun to all other electrodes	C_{kR}, C_{kG}, C_{kB}	5 pF
focusing electrode to all other electrodes	C_{g3}	6 pF
Heating		indirect by a.c. or d.c.
heater voltage	V_f	6,3 V
heater current	I_f	685 mA

OPTICAL DATA

Screen	metal-backed vertical phosphor stripes; phosphor lines follow glass contour
Screen finish	satinized
Useful screen dimensions	
diagonal	min. 382,3 mm
horizontal axis	min. 322,1 mm
vertical axis	min. 241,6 mm
area	min. 755 cm^2
Phosphors	
red	pigmented europium activated rare earth
green	sulphide type
blue	pigmented sulphide type
Centre-to-centre distance of vertical identical colour phosphor stripes, at screen centre	0,70 mm
Light transmission of face glass at centre	66,8%

MECHANICAL DATA (see also the figures on the following pages)

Overall length	378 ± 5 mm
Neck diameter	$29{,}1\ ^{+1{,}4}_{-0{,}7}$ mm *
Bulb dimensions	
diagonal	max. 418,8 mm
width	max. 360,6 mm
height	max. 281,8 mm
Base	JEDEC B8-274
Anode contact	small cavity contact J1-21, IEC 67-III-2
Mounting position	anode contact on top
Net mass	approx. 8 kg

Handling

During shipment and handling the tube should not be subjected to accelerations greater than 35 g in any direction.

* In the region of 70 mm from the neck end, the maximum diameter is 30 mm.

MECHANICAL DATA (continued)

Dimensions in mm

Notes are given after the drawings.

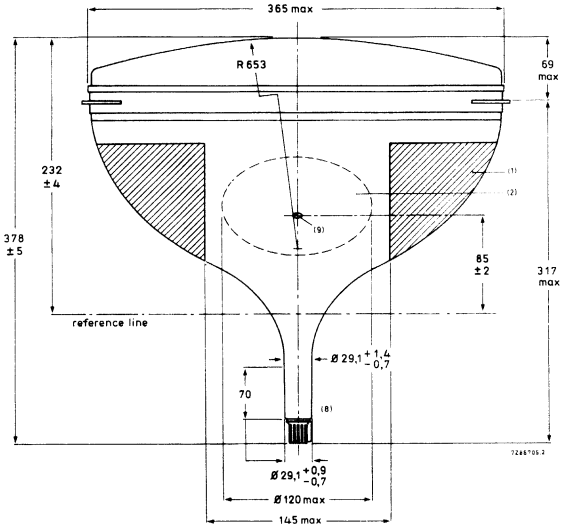

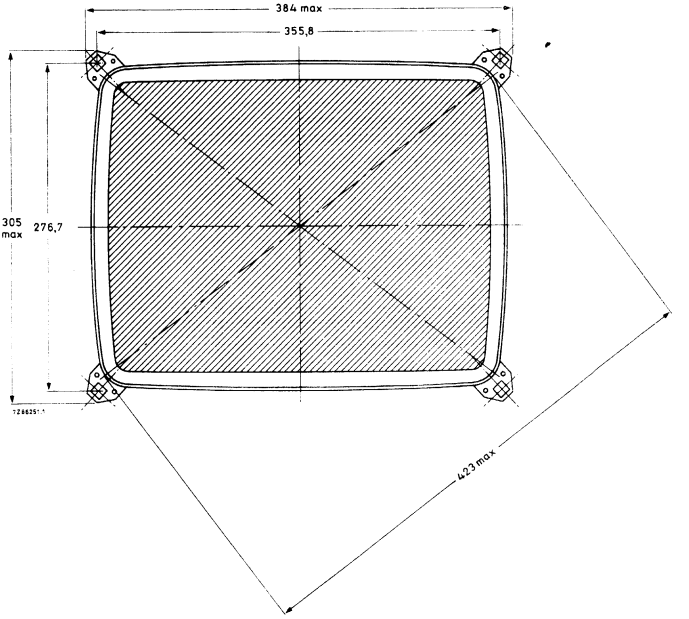

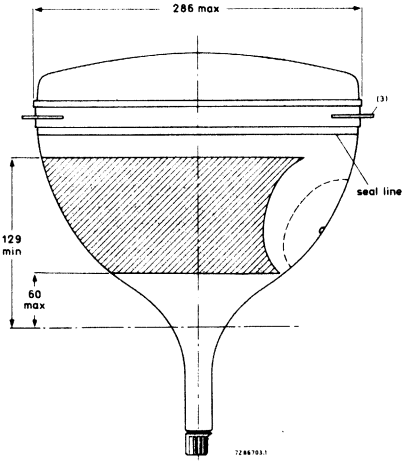
286 max
(3)
seal line
129
min
60
max

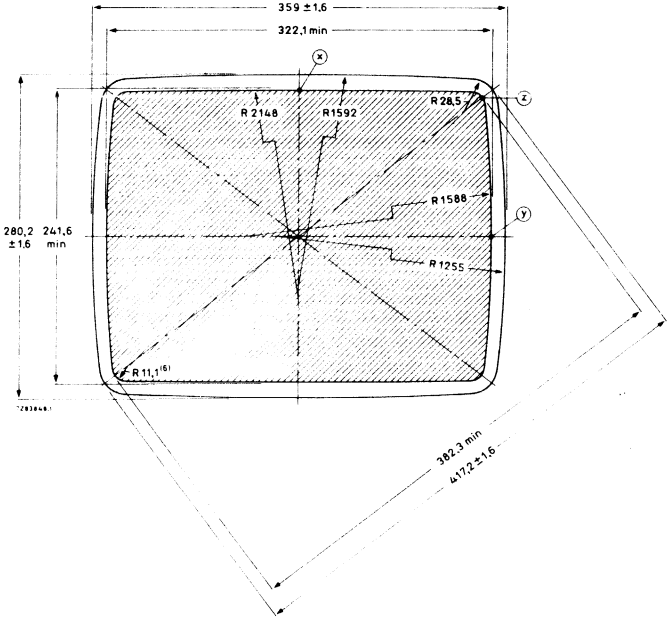
359 ±1,6
322,1 min
(x)
R 2148
R1592
R28,5
(z)
R1588
(y)
280,2
±1,6
241,6
min
R1255
R 11,1 (6)
382,3 min
417,2 ±1,6

MECHANICAL DATA (continued)

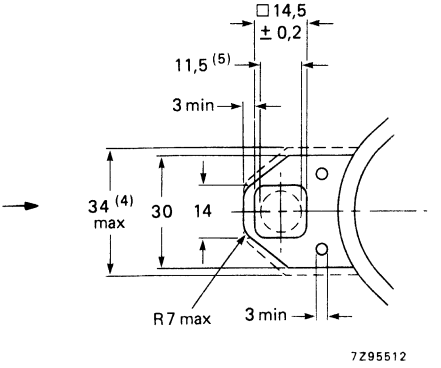

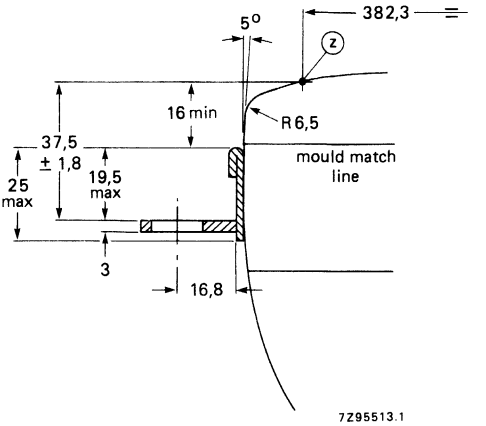

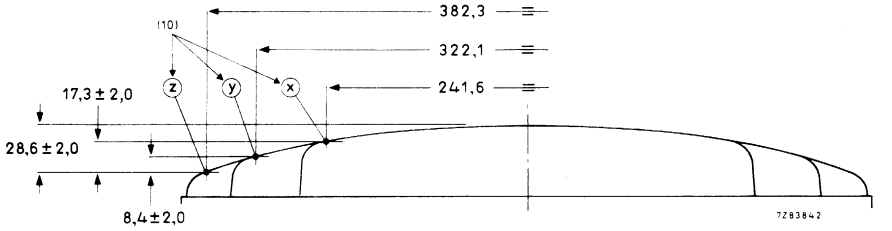

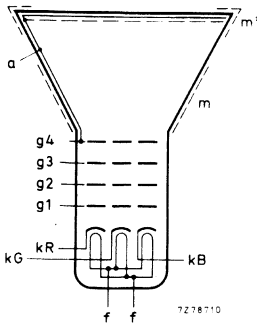

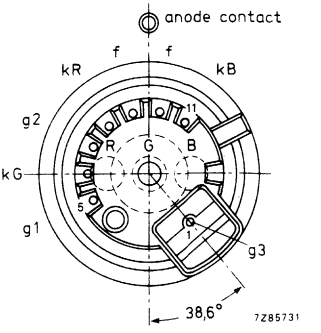

Notes to outline drawings on the preceding pages

1. Configuration of outer conductive coating may be different, but will contain the contact area as shown in the drawing.
2. To clean this area, wipe only with a soft lintless cloth.
3. One of the four mounting lugs may deviate (1,5 mm max.) from the plane of the other three lugs. This deviation is incorporated in the tolerance of ± 1,8 mm.
4. Minimum space to be reserved for mounting lug.
5. The position of the mounting screw in the cabinet must be within a circle of 11,5 mm diameter drawn around the true geometrical positions, i.e. the corners of a rectangle of 355,8 mm x 276,7 mm.
6. Co-ordinates for radius R = 11,1 mm: x = 146,52 mm, y = 104,72 mm.
7. Not applicable.
8. The socket for this base should not be rigidly mounted; it should have flexible leads and be allowed to move freely. After mounting of the tube in the cabinet note that the position of the base can fall within a circle, having a diameter of max. 50 mm, concentric with an imaginary tube axis.
9. Small cavity contact J1-21, IEC 67-III-2.
10. The X, Y and Z reference points are located on the outside surface of the face plate at the intersection of the minor, major and diagonal screen axis respectively, with the minimum published screen.

Reference line gauge; GR90CJ4

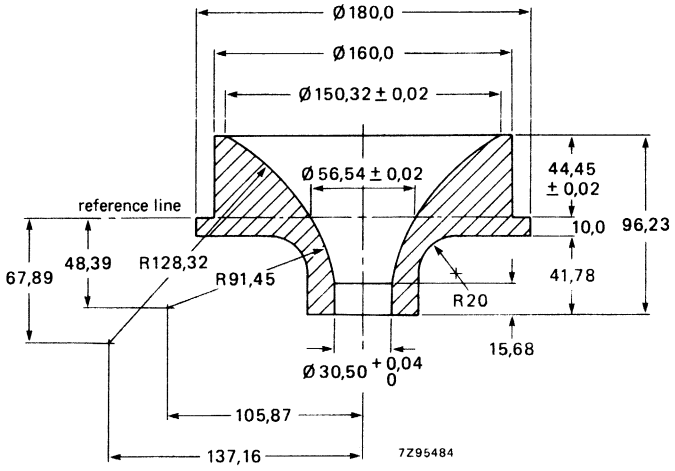

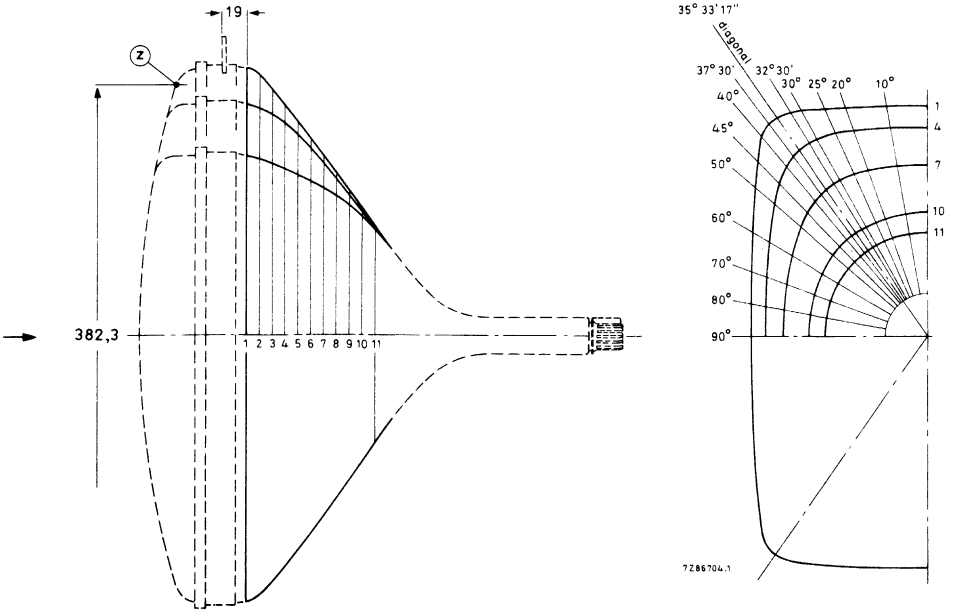

section	nom. distance from section 1	distance from centre (max. values)														
		0°	10°	20°	25°	30°	32°30'	diag. axes	37°30'	40°	45°	50°	60°	70°	80°	90°
Dimensions in mm																
1	0	179,1	181,5	189,1	195,0	202,1	205,7	208,5	207,8	203,3	189,6	177,2	159,0	147,6	141,3	139,3
2	10	176,1	178,4	185,4	190,7	196,9	199,9	201,9	200,9	196,4	183,9	172,5	155,4	144,4	138,4	136,5
3	20	170,8	172,8	178,7	182,9	187,5	189,3	190,0	188,9	185,4	175,4	165,5	150,0	139,9	134,2	132,4
4	30	164,1	165,8	170,8	174,1	177,2	178,2	177,9	176,7	173,9	166,0	157,8	144,2	135,1	129,9	128,2
5	40	155,6	157,1	161,4	164,0	166,1	166,4	165,6	164,3	161,9	155,7	149,1	137,9	130,0	125,4	123,9
6	50	145,1	146,5	150,1	152,2	153,6	153,6	152,8	151,7	149,9	145,1	140,1	131,1	124,5	120,6	119,3
7	60	133,6	134,7	137,4	138,9	139,9	140,0	139,5	138,9	137,8	134,6	130,9	123,8	118,6	115,4	114,3
8	70	121,8	122,6	124,4	125,3	125,9	125,9	125,8	125,6	125,1	123,5	121,3	116,4	112,2	109,6	108,7
9	80	109,5	110,0	110,9	111,3	111,6	111,6	111,6	111,6	111,5	110,9	110,1	107,6	105,0	103,1	102,4
10	90	96,5	96,6	96,8	96,9	97,0	97,1	97,1	97,2	97,2	97,1	97,0	96,3	95,4	94,5	94,1
11	100	82,2	82,1	82,1	82,1	82,2	82,2	82,2	82,2	82,2	82,2	82,2	82,2	82,2	82,2	82,1

Base JEDEC B8-274

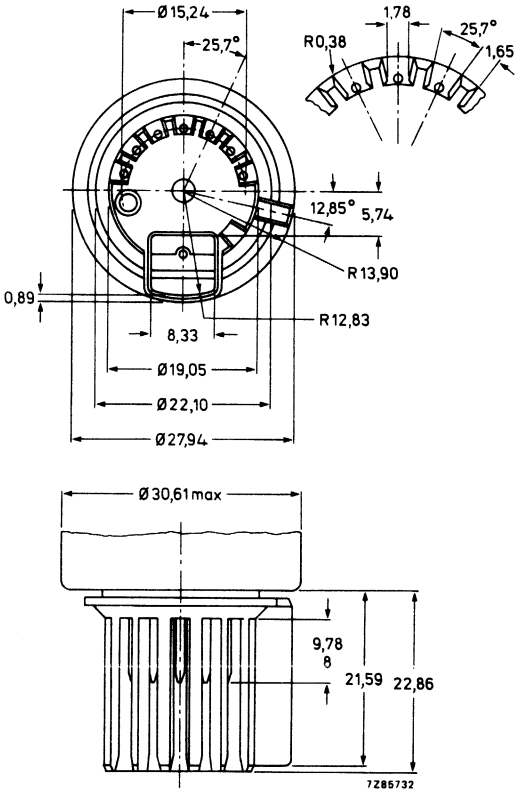

TYPICAL OPERATING CONDITIONS

The voltages are specified with respect to grid 1.

Anode voltage	$V_{a,g4}$	25 kV
Grid 3 (focusing electrode) voltage	V_{g3}	6,6 to 7,5 kV
Grid 2 voltage for a spot cut-off voltage V_K = 140 V	V_{g2}	390 to 760 V
Luminance at the centre of the screen*	L	180 cd/m²

* Tube settings adjusted to produce white of 6500K + 7 M.P.C.D. (x = 0,313, y = 0,329) focused raster, current density 0,4 μA/cm².

EQUIPMENT DESIGN VALUES

The values are valid for anode voltages between 20 and 27,5 kV.
The voltages are specified with respect to grid 1.

Grid 3 (focusing electrode) voltage	V_{g3}	26,6 to 29,8% of anode voltage
Grid 2 voltage and cathode voltage for visual extinction of focused spot	V_{g2} and V_k	see cut-off design chart *
Difference in cut-off voltages between guns in any tube	ΔV_k	lowest value > 80% of highest value
Video drive characteristics		see graphs **
Grid 3 (focusing electrode) current	I_{g3}	−5 to + 5 μA
Grid 2 current	I_{g2}	−5 to + 5 μA
Grid 1 current under cut-off conditions	I_{g1}	−5 to + 5 μA
To produce white of 6500K + 7 M.P.C.D. (CIE co-ordinates x = 0,313, y = 0,329)		
Percentage of the total anode current supplied by each gun (typical)		
red gun		38,3%
green gun		35,8%
blue gun		25,9%
Ratio of anode currents		
red gun to green gun		min. 0,8
		average 1,1
		max. 1,4
red gun to blue gun		min. 1,1
		average 1,5
		max. 1,9
blue gun to green gun		min. 0,5
		average 0,7
		max. 0,9

* The common V_{g2} should be adjusted as follows:
Set the cathode voltage, V_k, for each gun at 150 V. Increase the V_{g2} from about 400 V to the value at which the raster of one of the guns becomes just visible. Now decrease the V_k of the remaining guns so that the rasters of these guns also become visible.

** For optimum picture performance it is recommended that the cathodes are not driven below + 10 V.

LIMITING VALUES (Design maximum rating system unless otherwise stated)

The voltages are specified with respect to grid 1.

Anode voltage	$V_{a,g4}$	max.	27,5 kV	notes 1, 2, 3
		min.	20 kV	notes 1 and 4
Long-term average current for three guns	I_a	max.	750 μA	note 5
Grid 3 (focusing electrode) voltage	V_{g3}	max.	11 kV	
Grid 2 voltage, peak	V_{g2p}	max.	1000 V	
Cathode voltage				
positive	V_k	max.	400 V	
positive operating cut-off	V_k	max.	200 V	
negative	$-V_k$	max.	0 V	
negative peak	$-V_{kp}$	max.	2 V	
Heater voltage	V_f	6,3 V	+ 5 % −10 %	notes 1 and 6
Heater-cathode voltage				
heater negative with respect to cathode				
during equipment warm-up period not exceeding 15 s	V_{kf}	max.	450 V	note 1
after equipment warm-up period	V_{kf}	max.	250 V	
heater positive with respect to cathode	$-V_{kfp}$	peak	200 V	note 1
	$-V_{kf}$	max. (d.c. component value)	0 V	

Notes

1. Absolute maximum rating system.
2. The X-ray dose rate remains below the acceptable value of 0,5 mR/h, measured with ionization chamber when the tube is used within its limiting values.
3. During adjustment on the production line this value is likely to be surpassed considerably. It is therefore strongly recommended to first make the necessary adjustments for normal operation without picture tube.
4. Operation of the tube at lower voltages impairs the luminance and resolution.
5. The short-term average anode current should be limited by circuitry to 1000 μA.
6. For maximum cathode life and optimum performance, it is recommended that the heater supply be designed for 6,3 V at zero beam current.

FLASHOVER PROTECTION

With the high voltage used with this tube (max. 27,5 kV) internal flashovers may occur. As a result of the Soft-Flash technology these flashover currents are limited to approx. 60 A offering higher set reliability, optimum circuit protection and component savings.
Primary protective circuitry using properly grounded spark gaps and series isolation resistors (preferably carbon composition) is still necessary to prevent tube damage. The spark gaps should be connected to all picture tube electrodes at the socket according to the figure below; they are not required on the heater pins. No other connections between the outer conductive coating and the chassis are permissible.
The spark gaps should be designed for a breakdown voltage at the focusing electrode (g3) of 11 kV ($1,5 \times V_{g3}$ max. at $V_{a,g4} = 25$ kV), and at the other electrodes of 1,5 to 2 kV.
The values of the series isolation resistors should be as high as possible (min. 1,5 kΩ) without causing deterioration of the circuit performance. The resistors should be able to withstand an instantaneous surge of 20 kV for the focusing circuit and 12 kV for the remaining circuits without arcing.
Additional information is available on request.

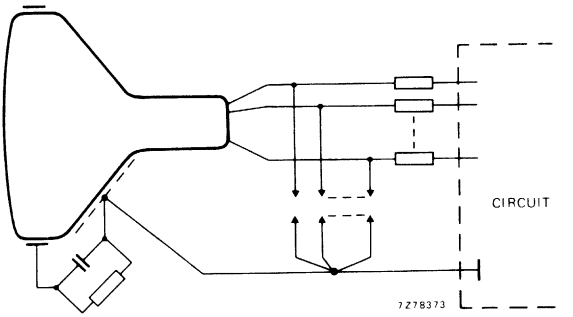

BEAM CORRECTIONS

Maximum required correction for register, as measured at the centre of the screen in any direction	0,08 mm
Centre convergence displacement of the blue and red beams is contained within a circle; max. diameter of circle	4,5 mm
Centre convergence displacement between the green beam and converged blue and red beams is contained within a circle; maximum diameter of circle	2,3 mm
Maximum centring error in any direction after colour purity, static convergence, and horizontal centre line correction, measured with deflection coils in nominal position	5 mm

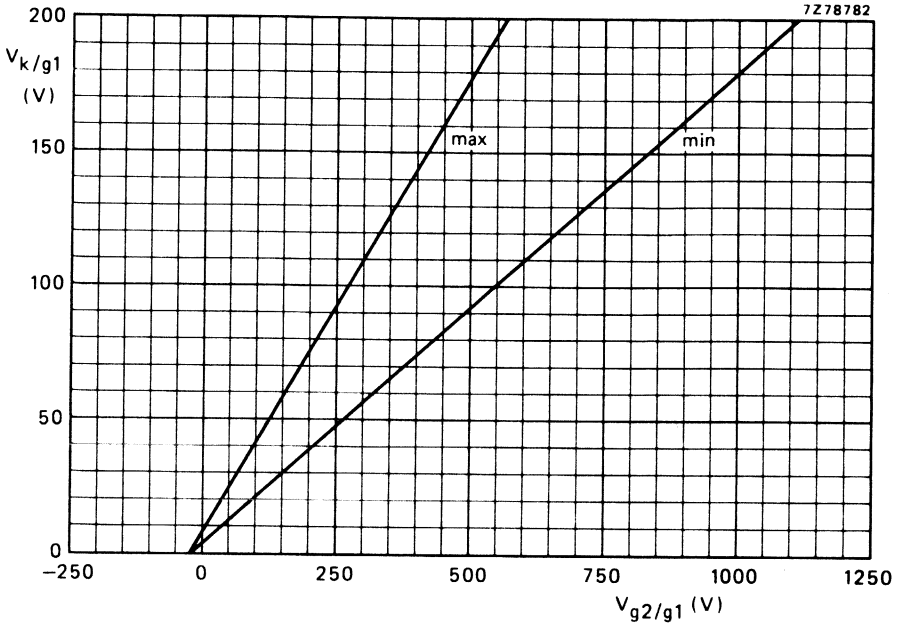

Spot cut-off design chart (cathode drive), V_{g3} adjusted for focus, $V_{a,g4}$ = 20 to 27,5 kV.

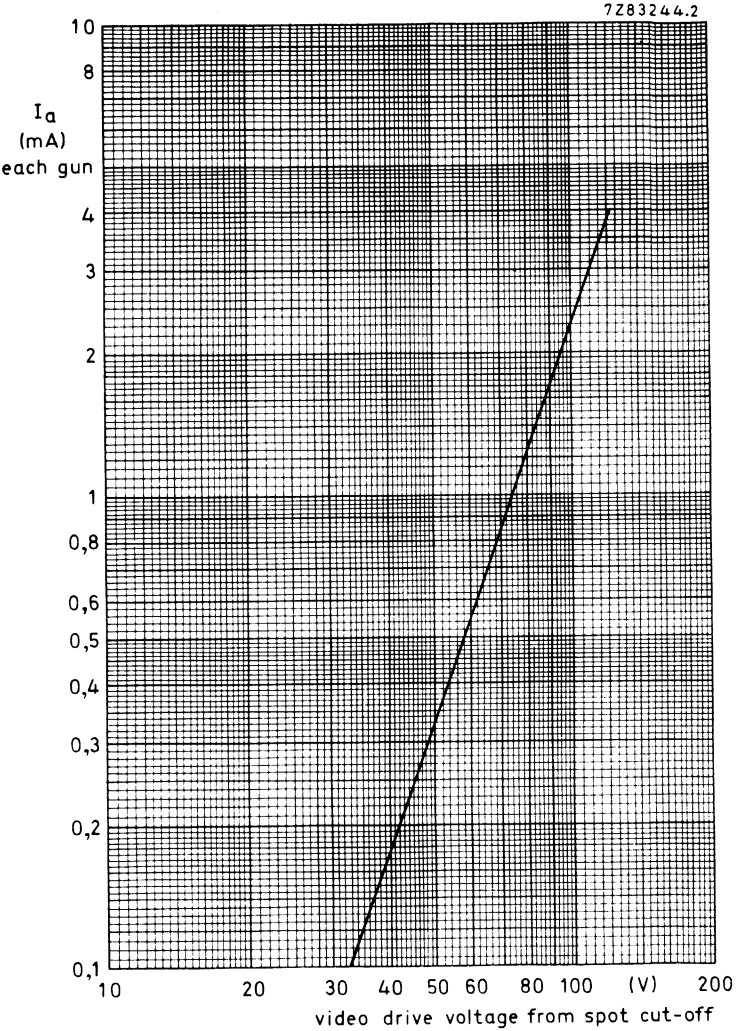

Typical cathode drive characteristics.

V_f = 6,3 V;

$V_{a,g4}$ = 25 kV;

V_{g3} adjusted for focus;

V_{g2} adjusted to provide spot cut-off for V_k = 140 V.

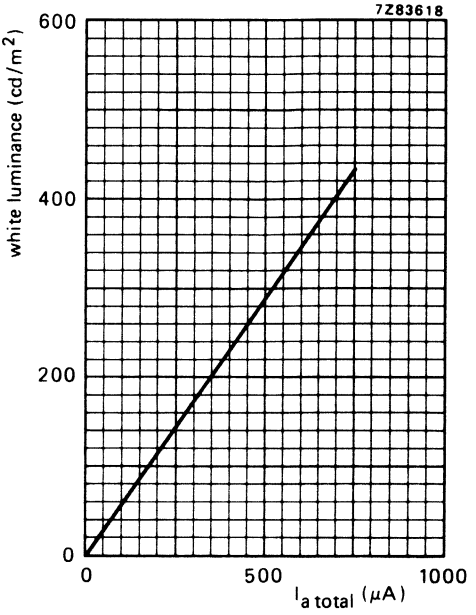

Luminance at the centre of the screen as a function of I_{total}.
$V_{a,g4}$ = 25 kV, V_f = 6,3 V, V_{g3} adjusted for optimum focus.
Scanned area = 322,1 mm x 241,6 mm;
CIE co-ordinates x = 0,313, y = 0,329.

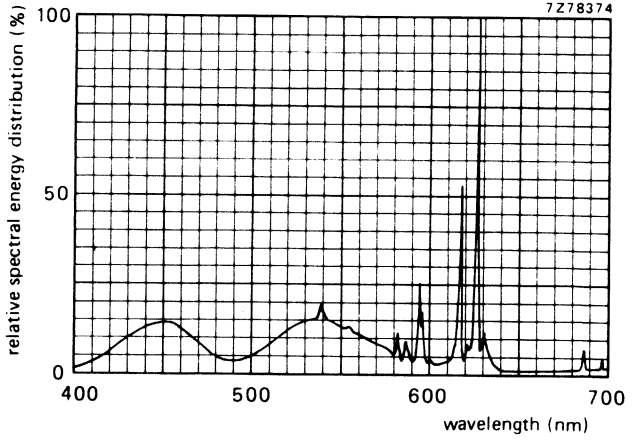

Simultaneous excitation of red, green and blue phosphor, measured in a tube, to produce white of x = 0,313, y = 0,329. Exact shape of the peaks depends on the resolution of the measuring apparatus.

Colour co-ordinates:	x	y
red	0,635	0,340
green	0,315	0,600
blue	0,150	0,060

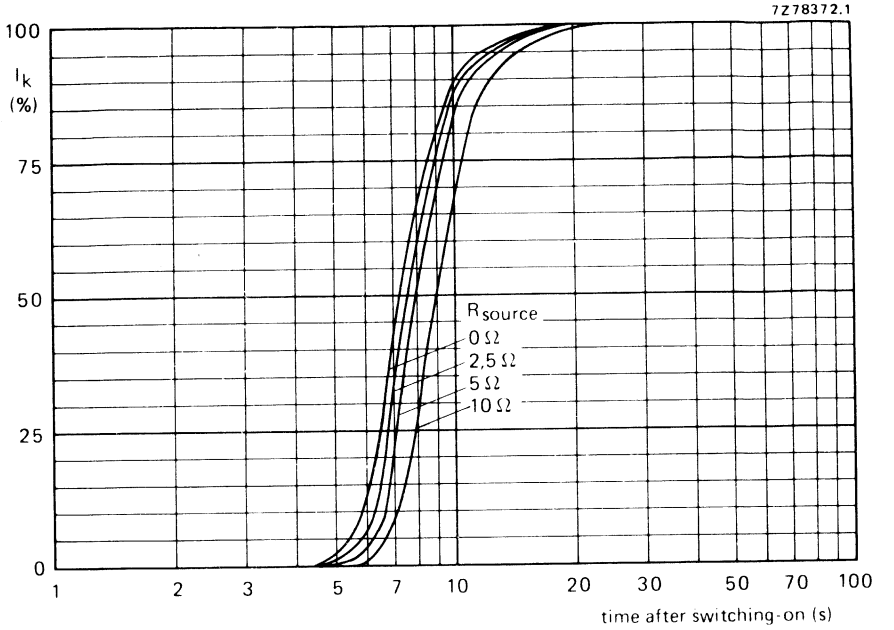

Cathode heating time after switching on, measured under typical operating conditions.

DEGAUSSING

The picture tube is provided with an internal magnetic shield. This shield and the shadow mask with its suspension system may be provided with an automatic degaussing system, consisting of one magnetic coil winding mounted on the cone of the picture tube.

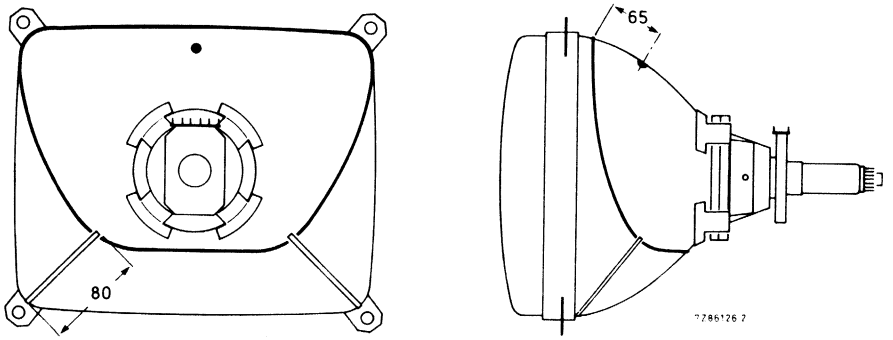

Position of degaussing coil on the picture tube; dimensions are given in mm.

For proper degaussing an initial magnetomotive force (m.m.f.) of 600 ampere-turns is required in the coil. This m.m.f. has to be gradually decreased by appropriate degaussing circuitry. In the steady state, no significant m.m.f. should remain in the coil ($\leqslant$ 0,6 ampere-turns). If single-phase power rectification is employed in the t.v. circuitry, provision should be included to prevent asymmetric distortion of the a.c. voltage applied to the degaussing circuit due to high d.c. inrush currents. An example of a degaussing circuit and coil data for various mains voltages are given below.

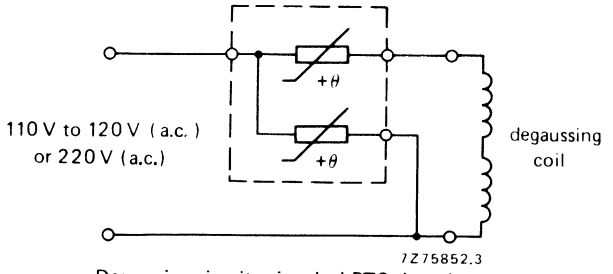

Degaussing circuit using dual PTC thermistor.

Data of degaussing coil

	110 V (a.c.) mains	220 V (a.c.) mains
Circumference	105 cm	105 cm
Number of turns	70	120
Copper-wire diameter	0,5 mm	0,35 mm
Resistance	6,3 Ω	22,3 Ω
Catalogue number of appropriate dual PTC thermistor	8222 298 73091	2322 662 98009

DEFLECTION UNIT

- **Raster Correction Free**

QUICK REFERENCE DATA

Picture tube	
gun arrangement	in line
diagonal	42 cm (16 in)
neck diameter	29,1 mm
Deflection angle	90°
Line deflection current, edge to edge at 25 kV	3,28 A (p-p)
Inductance of line coils, parallel connected	1,73 mH
Field deflection current, edge to edge at 25 kV	0,47 A (p-p)
Resistance of field coils, series connected	44 Ω

APPLICATION

This deflection unit, in conjunction with devices for colour purity and static convergence is for 90° in-line colour picture tubes A42-592X and A42-593X, with a neck diameter of 29,1 mm. ←
The unit requires no raster correction circuitry.

DESCRIPTION

The deflection unit consists of saddle-shaped line deflection coils, toroidal wound field deflection coils, and metal fins, thus forming a raster correction free hybrid yoke. The unit has a metal non-magnetic clamping ring at the rear, to fix the deflection unit on the neck of the picture tube.

MECHANICAL DATA

Dimensions in mm

Outlines

The deflection unit fits a tube with a neck diameter of $29{,}1\ ^{+0{,}9}_{-0{,}7}$ mm.

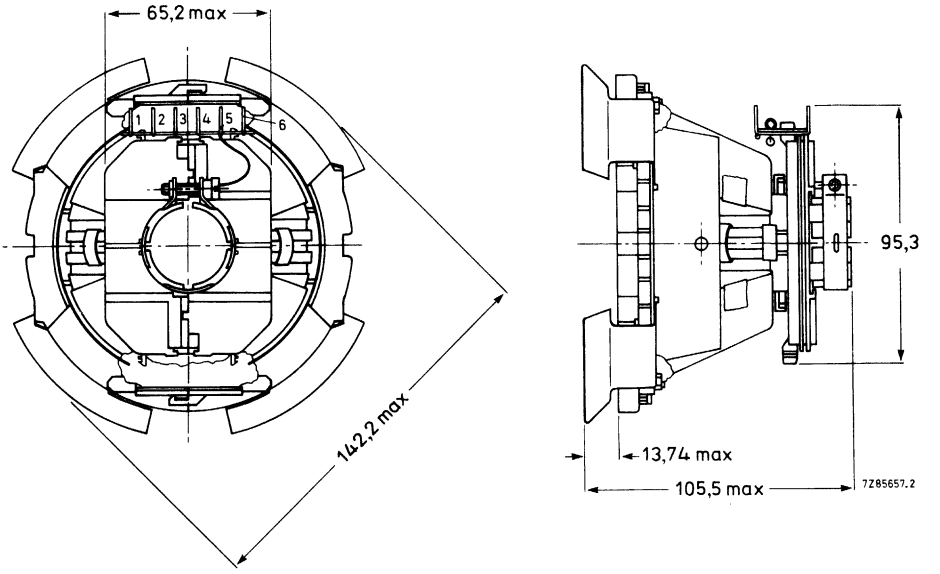

Fig. 1.

Maximum operating temperature (average copper temperature measured with resistance method)	+90 °C
Storage temperature range	−20 to +90 °C
Flame retardent	according to UL 1413, category 94-V1
Torque on neck clamp screw	1,4 Nm

ENVIRONMENTAL TEST SPECIFICATIONS

Vibration	IEC 68-2-6 (test Fc)
Bump	IEC 68-2-29 (test Eb; 35g)
Cold	IEC 68-2-1 (test Ab)
Dry heat	IEC 68-2-2 (test Bb)
Damp heat, steady state	IEC 68-2-3 (test Ca)
Cyclic damp heat	IEC 68-2-30 (test Db)
Change of temperature	IEC 68-2-14 (test Nb)

ELECTRICAL DATA

Line coils	parallel connected
Inductance at 1 V (r.m.s.), 1 kHz	1,73 mH ± 5%
Resistance at 25 °C	1,79 Ω ± 10%
Line deflection current, edge to edge at 25 kV	3,28 A (p-p)
Voltage during line scan, edge to edge, at 25 kV, scan period 52,5 μs	109 V
Field coils	series connected
Inductance at 1 V (r.m.s.), 1 kHz	116,4 mH ± 10%
Resistance at 25 °C	44 Ω ± 7%
Field deflection current, edge to edge at 25 kV	0,47 A (p-p)
Cross-talk	a voltage of 10 V, 15625 Hz applied to the line coils causes no more than 0,2 V across the field coils (damping resistors included)
Insulation resistance at 1 kV (d.c.)	
between line and field coils	> 500 MΩ
between line coil and core clamp	> 500 MΩ
between field coil and core clamp	> 10 MΩ

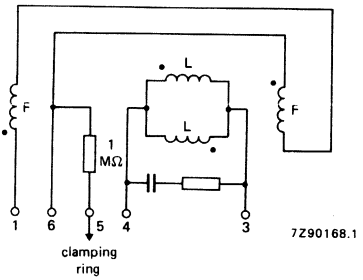

Fig. 2 Connection diagram, L = Line, F = Field.

ADJUSTMENT

- Adjust the static convergence with the four and six-pole magnets of the multipole unit AT1052 for the relative movement of the beams under influence of a four or six-pole magnet.
- Adjust colour purity by axial movement of the deflection yoke and adjustment of the two-pole magnets for centring of the beams.
- Tighten the screw of the clamping ring on the deflection yoke to secure the axial position of the unit on the picture tube.
- Readjust, if necessary, the convergence with the four and six-pole magnets.
- Tilt the unit in either horizontal or vertical direction, or in both directions so that blue, green and red lines converge at the end of the horizontal and vertical axis.
- This position of the unit has to be secured by three rubber wedges placed between the picture tube and the deflection unit. These wedges have to be cemented on to the picture tube.

DEFLECTION UNIT

- **Raster Correction Free**

QUICK REFERENCE DATA

Picture tube	
gun arrangement	in line
diagonal	42 cm (16 in)
neck diameter	29,1 mm
Deflection angle	90°
Line deflection current, edge to edge at 25 kV	3,04 A p-p
Inductance of line coils, parallel connected	1,89 mH
Field deflection current, edge to edge at 25 kV	0,45 A(p-p)
Resistance of field coils, series connected	55,6 Ω

APPLICATION

This deflection unit, in conjunction with devices for colour purity and static convergence is for 90° in-line colour picture tubes A42-592X and A42-593X, with a neck diameter of 29,1 mm. The unit requires no raster correction circuitry.

DESCRIPTION

The deflection unit consists of saddle-shaped line deflection coils, toroidal wound field deflection coils and metal fins, thus forming a raster correction free hybrid yoke. The unit has a metal non-magnetic clamping ring at the rear, to fix the deflection unit on the neck of the picture tube.

MECHANICAL DATA

Dimensions in mm

Outlines

The deflection unit fits a tube with a neck diameter of $29{,}1\ ^{+0{,}9}_{-0{,}7}$ mm.

For correct fitting the tube neck should be provided with adhesive tape.

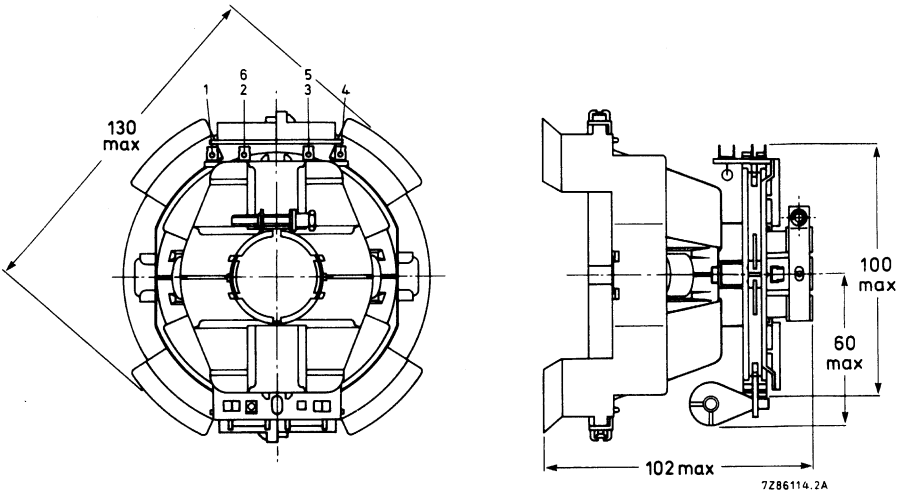

Fig. 1.

Maximum operating temperature (average copper temperature measured with resistance method)	+ 90 °C
Storage temperature range	−20 to + 90 °C
Flame retardent	according to UL 1413, category 94-V1
Torque on neck clamp screw	1,4 Nm

ENVIRONMENTAL TEST SPECIFICATIONS

Vibration	IEC 68-2-6 (test Fc)
Bump	IEC 68-2-29 (test Eb; 35g)
Cold	IEC 68-2-1 (test Ab)
Dry heat	IEC 68-2-2 (test Bb)
Damp heat, steady state	IEC 68-2-3 (test Ca)
Cyclic damp heat	IEC 68-2-30 (test Db)
Change of temperature	IEC 68-2-14 (test Nb)

ELECTRICAL DATA

Line coils	parallel connected
Inductance at 1 V (r.m.s.), 1 kHz	1,89 mH ± 5%
Resistance at 25 °C	2,6 Ω ± 10%
Line deflection current, edge to edge, at 25 kV	3,04 A (p-p)
Voltage during line scan, edge to edge, at 25 kV, scan period 52,5 μs	109 V
Field coils	series connected
Inductance at 1 V (r.m.s.), 1 kHz	116 mH ± 10%
Resistance at 25 °C	55,6 Ω ± 7%
Field deflection current, edge to edge, at 25 kV	0,45 A (p-p)
Cross-talk	a voltage of 10 V, 15625 Hz applied to the line coils causes no more than 0,2 V across the field coils (damping resistors included)
Insulation resistance at 1 kV (d.c.)	
between line and field coils	> 500 MΩ
between line coil and core clamp	> 500 MΩ
between field coil and core clamp	> 10 MΩ

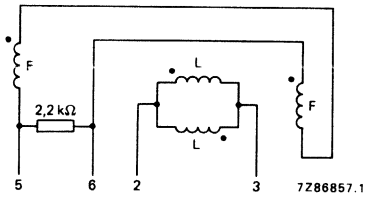

Fig. 2 Connection diagram, L = Line, F = Field.

ADJUSTMENT

- Adjust the static convergence with the four and six-pole magnets of the multipole unit AT1052 for the relative movement of the beams under influence of a four or six-pole magnet.
- Adjust colour purity by axial movement of the deflection yoke and adjustment of the two-pole magnets for centring of the beams.
- Tighten the screw of the clamping ring on the deflection yoke to secure the axial position of the unit on the picture tube.
- Readjust, if necessary, the convergence with the four and six-pole magnets.
- Tilt the unit in either horizontal or vertical direction, or in both directions so that blue, green and red lines converge at the end of the horizontal and vertical axis.
- This position of the unit has to be secured by three rubber wedges placed between the picture tube and the deflection unit. These wedges have to be cemented on to the picture tube.

Hi-Bri COLOUR PICTURE TUBE

- 90° deflection
- In-line, thermally stable hi-bi potential gun
- 22,5 mm neck diameter
- Hi-Bri technology
- Pigmented phosphors
- Slotted shadow mask optimized for minimum moiré
- Fine pitch over entire screen
- Phosphor lines follow glass contour
- Quick heating low-power cathodes
- Soft-Flash technology
- Internal magnetic shield
- Reinforced envelope for push-through mounting
- Combined with a deflection unit of the AT1645 series, it forms a self-converging and raster correction free assembly

QUICK REFERENCE DATA

Deflection angle	90°
Minimum useful screen diagonal	48 cm
Overall-length	427 mm
Neck diameter	22,5 mm
Heating	6,3 V, 300 mA
Focusing voltage	31% of anode voltage

ELECTRON-OPTICAL DATA

Electron gun system		unitized triple-aperture electrodes
Focusing method		electrostatic
Focus lens		hi-bi-potential
Deflection method		magnetic
Deflection angles		
diagonal		approx. 90°
horizontal		approx. 78°
vertical		approx. 60°

ELECTRICAL DATA

Capacitances		
anode to external conductive coating including rimband	$C_{a(m+m')}$	max. 2300 pF min. 1500 pF
grid 1 to all other electrodes	C_{g1}	15 pF
cathode of each gun to all other electrodes	C_{kR}, C_{kG}, C_{kB}	4 pF
focusing electrode to all other electrodes	C_{g3}	4 pF
Heating		indirect by a.c. or d.c.
heater voltage	V_f	6,3 V
heater current	I_f	300 mA

OPTICAL DATA

Screen	metal-backed vertical phosphor stripes; phosphor lines follow glass contour
Screen finish	satinized
Useful screen dimensions	
diagonal	min. 480,0 mm
horizontal axis	min. 404,4 mm
vertical axis	min. 303,3 mm
area	min. 1190 cm^2
Phosphors	
red	pigmented europium activated rare earth
green	sulphide type
blue	pigmented sulphide type
Centre-to-centre distance of vertical identical colour phosphor stripes, at screen centre	0,80 mm
Light transmission of face glass at centre	64%

MECHANICAL DATA (see also the figures on the following pages)

Overall length	426,6 ± 5 mm
Neck diameter	$22{,}5\ ^{+1{,}4}_{-0{,}7}$ mm*
Bulb dimensions	
diagonal	max. 515,1 mm
width	max. 442,1 mm
height	max. 343,4 mm
Base	JEDEC B8-288
Anode contact	small cavity contact J1-21, IEC 67-III-2
Mounting position	anode contact on top
Net mass	approx. 13 kg

Handling

During shipment and handling the tube should not be subjected to accelerations greater than 35g in any direction.

* In the region of 66 mm from the neck end, the maximum diameter is 23,2 mm.

MECHANICAL DATA (continued)

Notes are given after the drawings

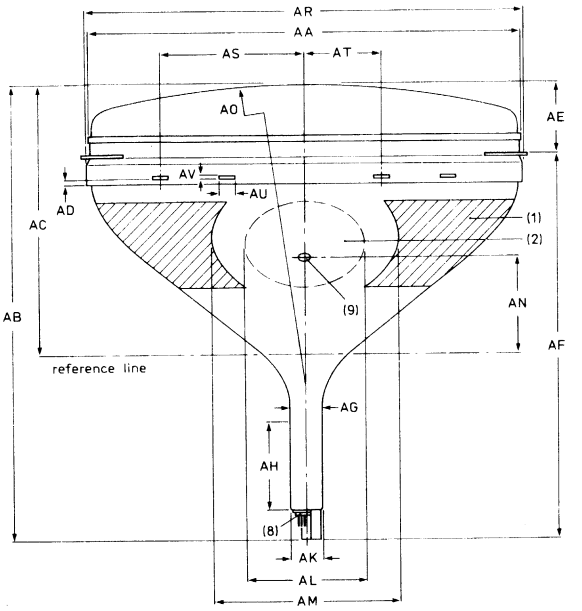

Dimensions in mm

AA	446 max
AB	431,6 max
AC	288,8 ± 4
AD	4 ± 1
AE	79 max
AF	355,5 max
AG	$22{,}5\ ^{+1{,}4}_{-0{,}7}$
AH	66
AK	22,5 ± 0,7
AL	110 ± 10
AM	163
AN	102 ± 3,2
AO	approx. 805
AR	455 max
AS	150 ± 5
AT	80 ± 5
AU	14,5 min
AV	4,8 min

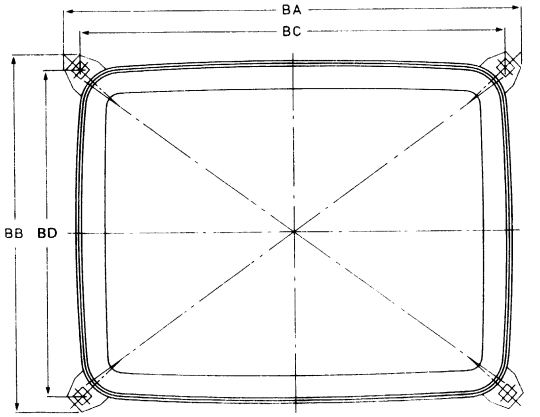

Dimensions in mm

BA	463 max
BB	364 max
BC	434
BD	337

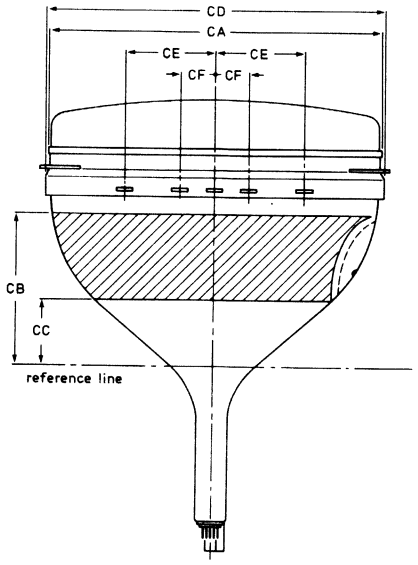

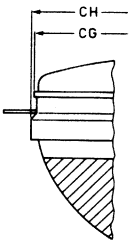

Dimensions in mm

CA	347 max
CB	171 min
CC	63 max
CD	356 max
CE	95 ± 5
CF	35 ± 5
CG	521 max
CH	528 max

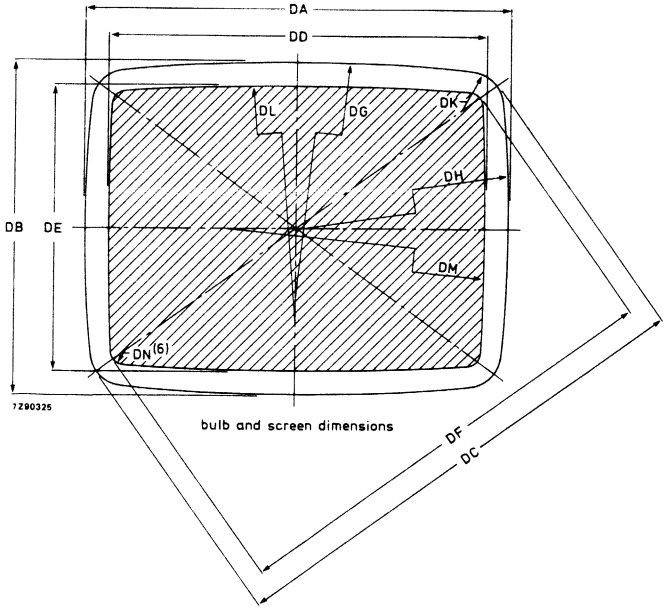

bulb and screen dimensions

Dimensions in mm

DA	440,5 ± 1,6
DB	341,8 ± 1,6
DC	513,5 ± 1,6
DD	404,4 min
DE	303,3 min
DF	480,0 min
DG	R1905
DH	R1532
DK	R29,85
DL	R2597
DM	R1948
DN	R13,1

MECHANICAL DATA (continued)

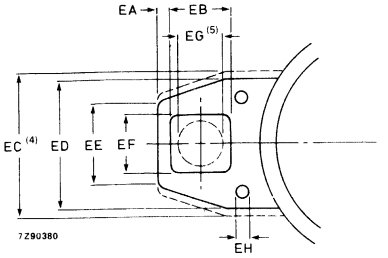

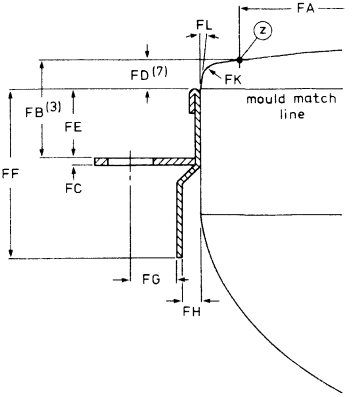

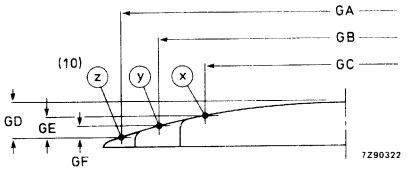

Dimensions in mm

EA	2,5 ± 0,5
EB	13 ± 0,3
EC	40 max
ED	35
EE	12
EF	12 ± 0,3
EG	8
EH	3,0 min

Dimensions in mm

GA	480
GB	404,4
GC	303,3
GD	36,6 ± 2,0
GE	22,2 ± 2,0
GF	10,8 ± 2,0

Dimensions in mm

FA	480
FB	38,5 ± 2,5
FC	2 max
FD	12 min
FE	24 max
FF	55 max
FG	13,4
FH	2 min
FK	R6
FL	5°

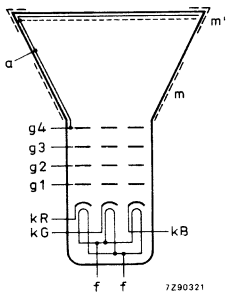

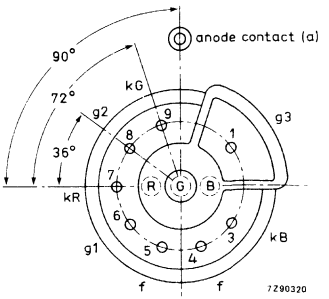

Notes to outline drawings on the preceding pages

1. Configuration of outer conductive coating may be different, but will contain the contact areas as shown in the drawing.
2. To clean this area, wipe only with a soft lintless cloth.
3. One of the four mounting lugs may deviate (2 mm max.) from the plane of the other three lugs. This deviation is incorporated in the tolerance of ± 2,5 mm.
4. Minimum space to be reserved for mounting lug.
5. The position of the mounting screw in the cabinet must be within a circle of 8 mm diameter drawn around the true geometrical positions, i.e. the corners of a rectangle of 434 mm x 337 mm.
6. Co-ordinates for radius R = 13,1 mm; x = 184,58 mm, y = 131,93 mm.
7. Distance from point Z to any hardware.
8. The socket for this base should not be rigidly mounted; it should have flexible leads and be allowed to move freely. After mounting of the tube in the cabinet note that the position of the base can fall within a circle, having a diameter of max. 50 mm, concentric with an imaginary tube axis.
9. Small cavity contact J1-21, IEC 67-III-2.
10. The X, Y and Z reference points are located on the outside surface of the face plate at the intersection of the minor, major and diagonal screen axis respectively, with the minimum published screen.

Reference line gauge; G-R90CJ10

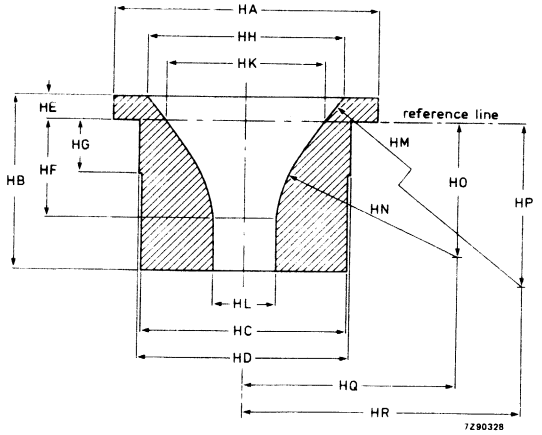

Dimensions in mm

HA	ϕ 100,00
HB	65,00
HC	ϕ 78,70
HD	ϕ 80,00
HE	9,20 ± 0,02
HF	36,22 ± 0,02
HG	20,00
HH	ϕ 75,48 ± 0,02
HK	ϕ 60,77 ± 0,02
HL	ϕ 23,90 $^{+0,04}_{-0}$
HM	R220,00
HN	R70,00
HO	50,30
HP	132,71
HQ	80,52
HR	205,85

Maximum cone contour

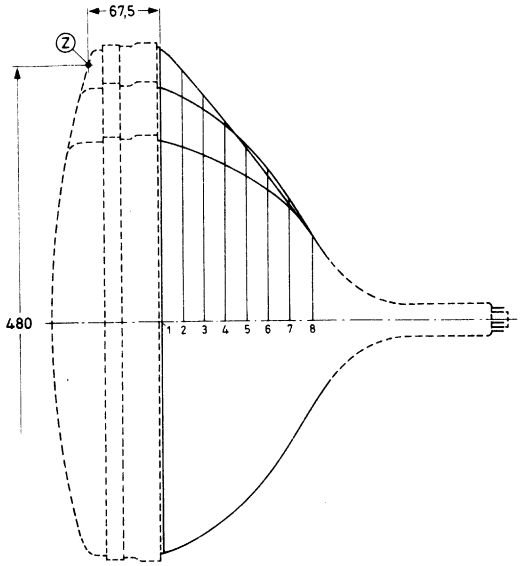

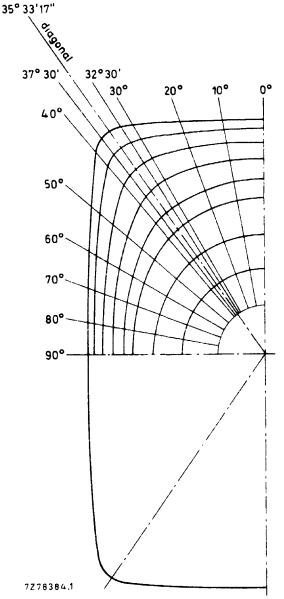

section	nom. distance from section 1	distance from centre (max. values)														
		0°	10°	20°	25°	30°	32° 30'	diag. axes	37° 30'	40°	45°	50°	60°	70°	80°	90°
1	0	218,7	221,9	231,2	238,5	247,5	252,2	255,9	254,6	247,7	230,1	215,1	193,0	179,2	171,5	169,0
2	20	209,8	212,4	220,3	226,0	232,5	235,3	236,5	235,0	230,2	216,9	204,4	184,9	172,3	165,3	163,0
3	40	197,5	199,4	204,7	208,1	211,1	211,9	211,4	210,0	207,0	198,6	189,5	173,9	163,2	157,1	155,1
4	60	182,2	183,2	185,8	187,1	187,7	187,4	186,4	185,3	183,3	178,2	172,1	160,7	152,4	147,4	145,8
5	80	163,2	163,5	163,9	163,7	163,1	162,4	161,4	160,6	159,3	156,3	152,9	145,8	140,1	136,6	135,4
6	100	146,1	146,1	145,7	145,1	144,2	143,6	142,8	142,2	141,4	139,5	137,5	133,3	129,7	127,3	126,5
7	120	112,3	112,3	111,9	111,7	111,3	111,1	110,9	110,7	110,5	110,0	109,5	108,6	107,8	107,3	107,1
8	141,7	79,8	79,8	79,8	79,8	79,8	79,8	79,8	79,8	79,8	79,8	79,8	79,8	79,8	79,8	79,8

Base JEDEC B8-288

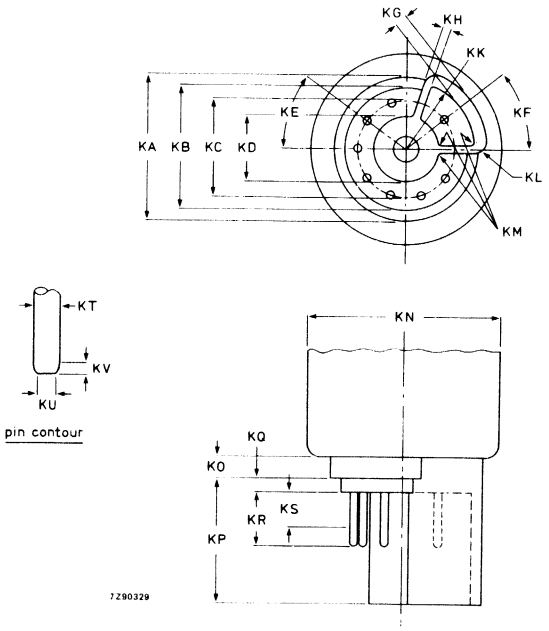

Dimensions in mm

KA	17,9 max
KB	15,4 max
KC	12,0
KD	7,9 min; 8,2
KE	36°
KF	38°
KG	1,3 max
KH	0,8 min; 1,0 max
KK	R8,66 ± 0,1
KL	R1,0
KM	R0,25
KN	23,2 max
KO	2,7 max
KP	15,4 ± 0,2
KQ	1,6 max
KR	6,85 max
KS	4,5 min
KT	1,016 ± 0,076
KU	0,63 max
KV	0,4 min

TYPICAL OPERATING CONDITIONS

The voltages are specified with respect to grid 1.

Anode voltage	$V_{a,g4}$	25 kV
Grid 3 (focusing electrode) voltage	V_{g3}	7,3 to 8,3 kV
Grid 2 voltage for a spot cut-off voltage V_k = 120 V	V_{g2}	310 to 650 V
Luminance at the centre of the screen*	L	170 cd/m²

* Tube settings adjusted to produce white of 6500K + 7 M.P.C.D. (x = 0,313, y = 0,329) focused raster, current density 0,4 μA/cm².

EQUIPMENT DESIGN VALUES

The values are valid for anode voltages between 20 and 27,5 kV.
The voltages are specified with respect to grid 1.

Grid 3 (focusing electrode) voltage	V_{g3}	29 to 33% of anode voltage
Grid 2 voltage and cathode voltage for visual extinction of focused spot	V_{g2} and V_k	see cut-off design chart
Difference in cut-off voltages between guns in any tube	ΔV_k	lowest value > 80% of highest value
Video drive characteristics		see graphs
Grid 3 (focusing electrode) current	I_{g3}	−5 to + 5 μA
Grid 2 current	I_{g2}	−5 to + 5 μA
Grid 1 current under cut-off conditions	I_{g1}	−5 to + 5 μA
To produce white of 6500K + 7 M.P.C.D. (CIE co-ordinates x = 0,313, y = 0,329)		
Percentage of the total anode current supplied by each gun (typical)		
red gun		38,3%
green gun		35,8%
blue gun		25,9%
Ratio of anode currents		
red gun to green gun		min. 0,8 average 1,1 max. 1,4
red gun to blue gun		min. 1,1 average 1,5 max. 1,9
blue gun to green gun		min. 0,5 average 0,7 max. 0,9

LIMITING VALUES (Design maximum rating system unless otherwise stated)

The voltages are specified with respect to grid 1.

Anode voltage	$V_{a,g4}$	max.	27,5	kV	notes 1, 2, 3
		min.	20	kV	notes 1 and 4
Long-term average current for three guns	I_a	max.	1000	μA	note 5
Grid 3 (focusing electrode) voltage	V_{g3}	max.	11	kV	
Grid 2 voltage, peak	V_{g2p}	max.	1000	V	
Cathode voltage					
positive	V_k	max.	400	V	
positive operating cut-off	V_k	max.	200	V	
negative	$-V_k$	max.	0	V	
negative peak	$-V_{kp}$	max.	2	V	
Heater voltage	V_f		6,3 V $^{+5\ \%}_{-10\ \%}$		notes 1 and 6
Heater-cathode voltage					
heater negative with respect to cathode					
after equipment warm-up period	V_{kf}	max.	200	V	
heater positive with respect to cathode	$-V_{kfp}$	peak	200	V	note 1
	$-V_{kf}$	max.	0	V	
		(d.c. component value)			

Notes

1. Absolute maximum rating system.
2. The X-ray dose rate remains below the acceptable value of 0,5 mR/h, measured with ionization chamber when the tube is used within its limiting values.
3. During adjustment on the production line this value is likely to be surpassed considerably. It is therefore strongly recommended to first make the necessary adjustments for normal operation without picture tube.
4. Operation of the tube at lower voltages impairs the luminance and resolution.
5. The short-term average anode current should be limited by circuitry to 1500 μA.
6. For maximum cathode life and optimum performance, it is recommended that the heater supply be designed for 6,3 V at zero beam current.

FLASHOVER PROTECTION

With the high voltage used with this tube (max. 27,5 kV) internal flashovers may occur. As a result of the Soft-Flash technology these flashover currents are limited to approx. 60 A offering higher set reliability, optimum circuit protection and component savings.

Primary protective circuitry using properly grounded spark gaps and series isolation resistors (preferably carbon composition) is still necessary to prevent tube damage. The spark gaps should be connected to all picture tube electrodes at the socket according to the figure below; they are not required on the heater pins. No other connections between the outer conductive coating and the chassis are permissible. The spark gaps should be designed for a breakdown voltage at the focusing electrode (g3) of 12 kV ($1{,}5 \times V_{g3}$ max. at $V_{a,g4} = 25$ kV), and at the other electrodes of 1,5 to 2 kV.

The values of the series isolation resistors should be as high as possible (min. 1,5 kΩ) without causing deterioration of the circuit performance. The resistors should be able to withstand an instantaneous surge of 20 kV for the focusing circuit and 12 kV for the remaining circuits without arcing.

Additional information is available on request.

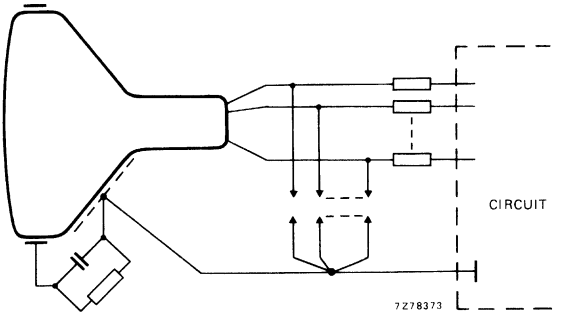

BEAM CORRECTIONS

Maximum required correction for register, as measured at the centre of the screen in any direction	0,08 mm
Centre convergence displacement of the blue and red beams is contained within a circle; max. diameter of circle	5 mm
Centre convergence displacement between the green beam and converged blue and red beams is contained within a circle; maximum diameter of circle	2,5 mm
Maximum centring error in any direction after colour purity, static convergence, and horizontal centre line correction, measured with deflection coils in nominal position	5 mm

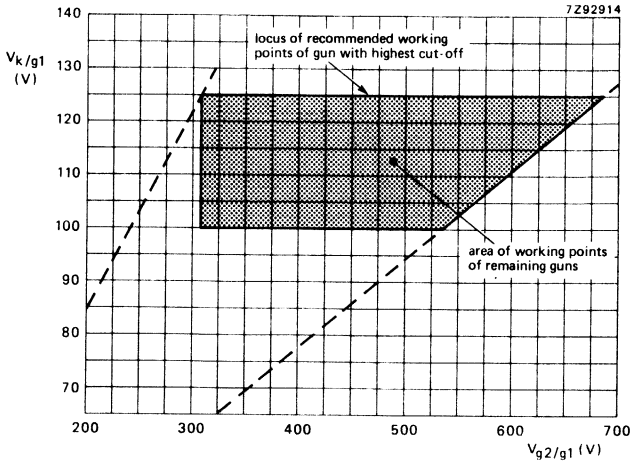

Spot cut-off design chart.

Grid 2 voltage (V_{g2}) adjusted for highest gun spot cut-off voltage V_k = 125 V.

Remaining guns adjusted for spot cut-off by means of cathode voltage

V_{g2} range 310 to 685 V;

V_k range 100 to 125 V.

Adjustment procedure:

Set the cathode voltage (V_k) for each gun at 125 V; increase the grid 2 voltage (V_{g2}) from approx. 300 V to the value at which one of the colours becomes just visible. Now decrease the cathode voltage of the remaining guns so that the other colours also become visible.

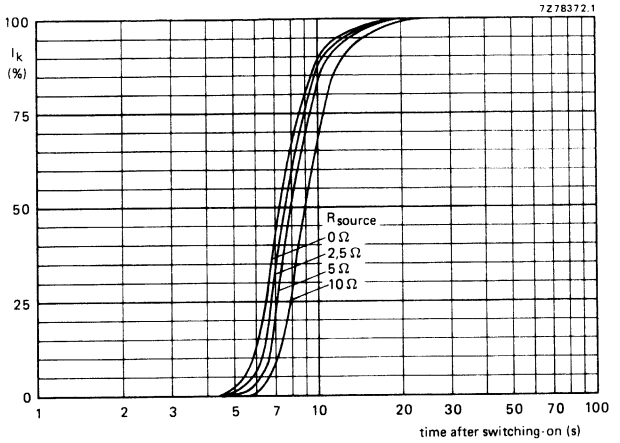

Cathode heating time after switching on, measured under typical operating conditions.

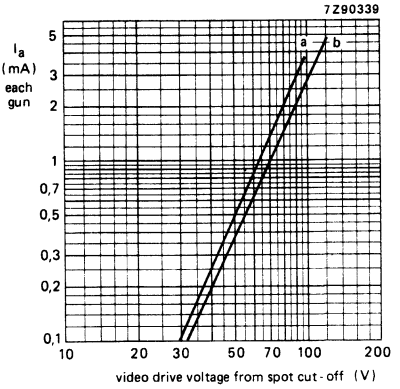

Typical cathode drive characteristics.

V_f = 6,3 V;

$V_{a,g4}$ = 25 kV;

V_{g3} adjusted for focus;

V_{g2} (each gun) adjusted to provide spot cut-off for V_k = 100 V (curve a), and V_k = 125 V (curve b).

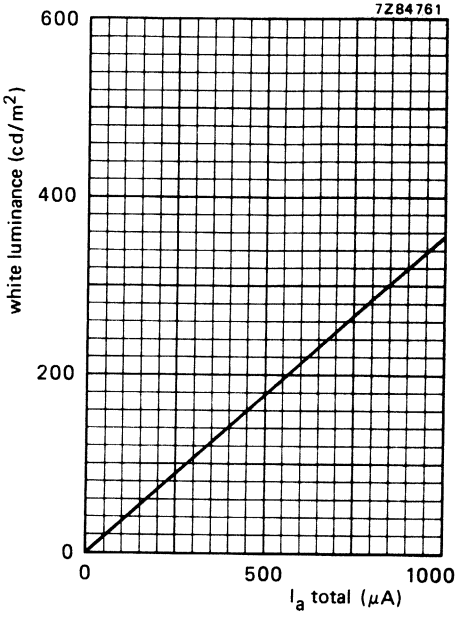

Luminance at the centre of the screen as a function of I_{total}.
$V_{a,g4}$ = 25 kV.
Scanned area = 404,4 mm x 303,3 mm;
CIE co-ordinates x = 0,313, y = 0,329.

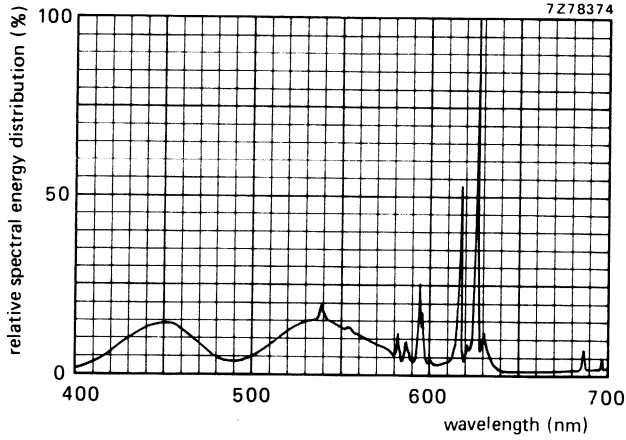

Simultaneous excitation of red, green and blue phosphor, measured in a tube, to produce white of x = 0,313, y = 0,329. Exact shape of the peaks depends on the resolution of the measuring apparatus.

Colour co-ordinates:	x	y
red	0,635	0,340
green	0,315	0,600
blue	0,150	0,060

DEGAUSSING

The picture tube has an internal magnetic shield. This shield and the shadow mask with its suspension system may be provided with an automatic degaussing system, consisting of two coils covering top and bottom cone parts, or one large coil shaped in the form of a figure eight, with one half on the top and the other half on the bottom cone part.
For proper degaussing an initial magnetomotive force (m.m.f.) of 300 ampere-turns is required in each of the coils. This m.m.f. has to be gradually decreased by appropriate degaussing circuitry. In the steady state, no significant m.m.f. should remain in the coils ($\leqslant$ 0,3 ampere-turns).
If single-phase power rectification is employed in the t.v. circuitry, provision should be included to prevent asymmetric distortion of the a.c. voltage applied to the degaussing circuit due to high d.c. inrush currents.

Examples of a double-coil and of a single-coil system are given below.

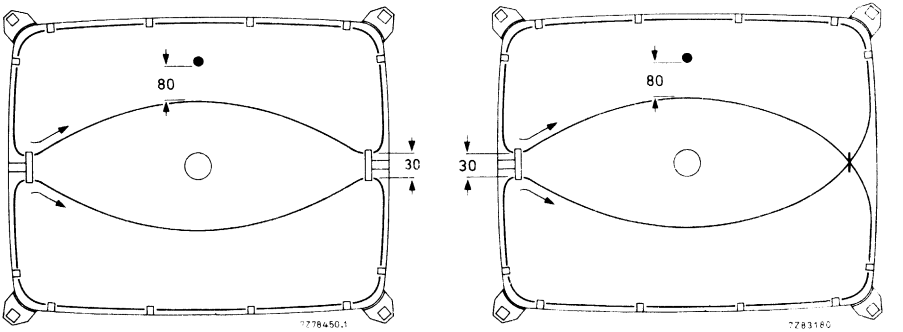

Position of degaussing coils on the picture tube.

Degaussing circuit using dual PTC thermistor.

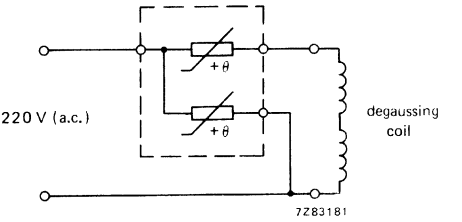

Data of each degaussing coil

	double-coil system	single-coil system
Circumference	117 cm	237 cm
Number of turns	60	60
Copper-wire diameter	0,35 mm	0,35 mm
Resistance (R_c)	13 Ω	26 Ω
Catalogue number of appropriate dual PTC thermistor	2322 662 98009	2322 662 98009

DEFLECTION UNIT

QUICK REFERENCE DATA

Picture tube	
gun arrangement	in line
minimum useful screen diagonal	48 cm
neck diameter	22,5 mm
Deflection angle	90°
Line deflection current, edge to edge at 25 kV	2,23 A (p-p)
Inductance of line coils, parallel connected	2,50 mH
Field deflection current, edge to edge at 25 kV	0,81 A (p-p)
Resistance of field coils, parallel connected	11,8 Ω

APPLICATION

This deflection unit, in conjunction with devices for colour purity and static convergence is for 90° in-line colour picture tube A48EAC00X, with a neck diameter of 22,5 mm. The unit requires no raster correction circuitry.

DESCRIPTION

The deflection unit consists of saddle-shaped line deflection coils and toroidal wound field deflection coils, thus forming a hybrid yoke. The unit has a metal non-magnetic clamping ring at the rear, to fix the deflection unit on the neck of the picture tube. With the deflection unit positioned axially for optimum purity, a clearance is available at the front which permits adjustment of convergence by tilting the unit in the vertical and/or horizontal plane. Wedges are recommended to secure the deflection unit in the chosen position.

MECHANICAL DATA

Dimensions in mm

Outlines

The deflection unit fits a tube with a neck diameter of $22{,}5^{+1{,}4}_{-0{,}7}$ mm.

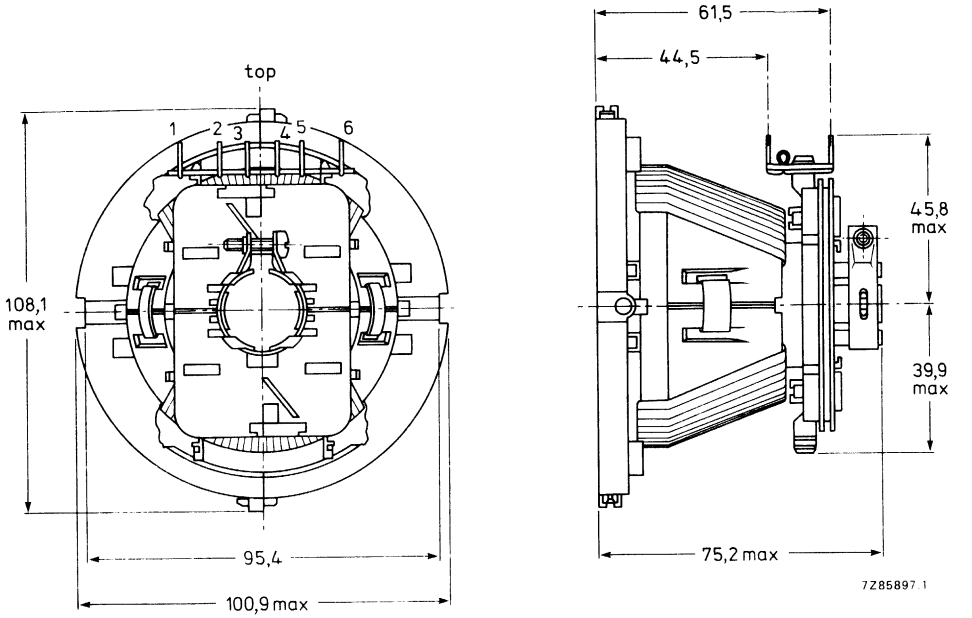

Fig. 1.

Maximum operating temperature (average copper temperature measured with resistance method)	+90 °C
Storage temperature range	−25 to +90 °C
Flame retardent	according to UL 1413, category 94-V I
Torque on neck clamp screw	1,0 Nm

ENVIRONMENTAL TEST SPECIFICATIONS

Vibration	IEC 68-2-6 (test Fc)
Shock	IEC 68-2-27 (test Ea)
Bump	IEC 68-2-29 (test Eb; 25g)
Cold	IEC 68-2-1 (test Ab)
Dry heat	IEC 68-2-2 (test Bb)
Damp heat, steady state	IEC 68-2-3 (test Ca)
Cyclic damp heat	IEC 68-2-30 (test Db)
Change of temperature	IEC 68-2-14 (test Nb)

ELECTRICAL DATA

Line coils	
Inductance at 1 V (r.m.s.), 1 kHz	2,50 mH ± 4%
Resistance at 25 °C	3,3 Ω ± 10%
Magnetic flux at 25 kV	5,57 mWb ± 2,5%
Line deflection current, edge to edge, at 25 kV	2,23 A (p-p)
Field coils	
Inductance at 1 V (r.m.s.), 1 kHz	27,5 mH ± 10%
Resistance at 25 °C	11,8 Ω ± 7%
Field deflection current, edge to edge, at 25 kV	0,81 A (p-p)
Cross talk	a voltage of 10 V, 15625 Hz applied to the line coils causes no more than 0,2 V across the field coils (damping resistors included)
Insulation resistance at 1 kV (d.c.)	
between line and field coils	> 500 MΩ
between line coil and core clamp	> 500 MΩ
between field coil and core clamp	> 10 MΩ

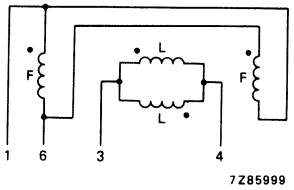

Fig. 2 Connection diagram, L = Line, F = Field.

ADJUSTMENT

- Adjust the static convergence with the four and six-pole magnets of the multipole unit AT1301 for the relative movement of the beams under influence of a four or six-pole magnet.
- Adjust colour purity by axial movement of the deflection unit and adjustment of the two-pole magnets for centring of the beams.
- Tighten the screw of the clamping ring on the deflection unit to secure the axial position of the unit on the picture tube.
- Readjust, if necessary, the convergence with the four and six-pole magnets.
- Tilt the unit in either horizontal or vertical direction, or in both directions so that blue, green and red lines converge at the end of the horizontal and vertical axis.
- This position of the unit has to be secured by three rubber wedges placed between the picture tube and the deflection unit. These wedges have to be cemented on to the picture tube.

DEFLECTION UNIT

QUICK REFERENCE DATA

Picture tube	
gun arrangement	in line
minimum useful screen diagonal	48 cm
neck diameter	22,5 mm
Deflection angle	90°
Line deflection current, edge to edge at 25 kV	2,38 A (p-p)
Inductance of line coils, parallel connected (including additional coil)	2,34 mH
Field deflection current, edge to edge at 25 kV	0,81 A (p-p)
Resistance of field coils, parallel connected	11,8 Ω

APPLICATION

This deflection unit, in conjunction with devices for colour purity and static convergence is for 90° in-line colour picture tube A48EAC00X, with a neck diameter of 22,5 mm. The unit requires no raster correction circuitry.

DESCRIPTION

The deflection unit consists of saddle-shaped line deflection coils and toroidal wound field deflection coils, thus forming a hybrid yoke. The unit has a metal non-magnetic clamping ring at the rear, to fix the deflection unit on the neck of the picture tube. With the deflection unit positioned axially for optimum purity, a clearance is available at the front which permits adjustment of convergence by tilting the unit in the vertical and/or horizontal plane. Wedges are recommended to secure the deflection unit in the chosen position.

MECHANICAL DATA

Dimensions in mm

Outlines

The deflection unit fits a tube with a neck diameter of $22{,}5^{+1{,}4}_{-0{,}7}$ mm.

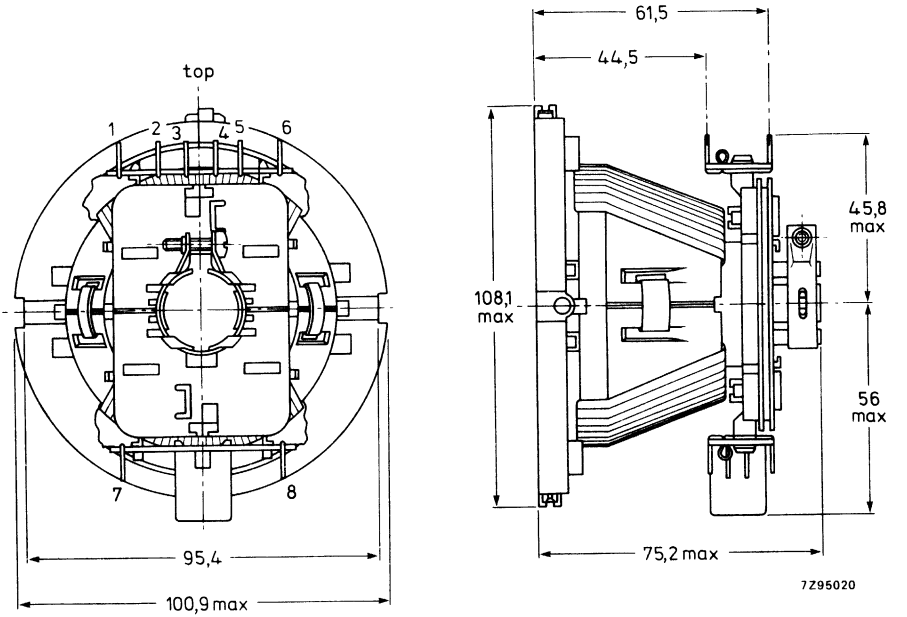

Fig. 1.

Maximum operating temperature (average copper temperature measured with resistance method)	+90 °C
Storage temperature range	−25 to +90 °C
Flame retardent	according to UL 1413, category 94-V1
Torque on neck clamp screw	1,0 Nm

ENVIRONMENTAL TEST SPECIFICATIONS

Vibration	IEC 68-2-6 (test Fc)
Shock	IEC 68-2-27 (test Ea)
Bump	IEC 68-2-29 (test Eb; 25g)
Cold	IEC 68-2-1 (test Ab)
Dry heat	IEC 68-2-2 (test Bb)
Damp heat, steady state	IEC 68-2-3 (test Ca)
Cyclic damp heat	IEC 68-2-30 (test Db)
Change of temperature	IEC 68-2-14 (test Nb)

ELECTRICAL DATA

Line coils, including additional coil	
Inductance at 1 V (r.m.s.), 1 kHz	2,34 mH ± 4%
Resistance at 25 °C	3,2 Ω ± 10%
Magnetic flux at 25 kV	5,57 mWb ± 2,5%
Line deflection current, edge to edge, at 25 kV	2,38 A (p-p)
Additional coil	
Inductance at 1 V (r.m.s.), 1 kHz	0,15 mH ± 4%
Field coils	
Inductance at 1 V (r.m.s.), 1 kHz	27,5 mH ± 10%
Resistance at 25 °C	11,8 Ω ± 7%
Field deflection current, edge to edge, at 25 kV	0,81 A (p-p)
Cross talk	a voltage of 10 V, 15625 Hz applied to the line coils causes no more than 0,20 V across the field coils (damping resistors included)
Insulation resistance at 1 kV (d.c.)	
between line and field coils	> 500 MΩ
between line coil and core clamp	> 500 MΩ
between field coil and core clamp	> 10 MΩ

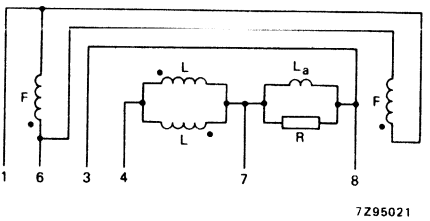

Fig. 2 Connection diagram. L = line coils; F = field coils; L_a = additional coil; R = 4,7 kΩ.

ADJUSTMENT

- Adjust the static convergence with the four and six-pole magnets of the multipole unit AT1301 for the relative movement of the beams under influence of a four or six-pole magnet.
- Adjust colour purity by axial movement of the deflection unit and adjustment of the two-pole magnets for centring of the beams.
- Tighten the screw of the clamping ring on the deflection unit to secure the axial position of the unit on the picture tube.
- Readjust, if necessary, the convergence with the four and six-pole magnets.
- Tilt the unit in either horizontal or vertical direction, or in both directions so that blue, green and red lines converge at the end of the horizontal and vertical axis.
- This position of the unit has to be secured by three rubber wedges placed between the picture tube and the deflection unit. These wedges have to be cemented on to the picture tube.

DEFLECTION UNIT

QUICK REFERENCE DATA

Picture tube	
gun arrangement	in line
minimum useful screen diagonal	48 cm
neck diameter	22,5 mm
Deflection angle	90°
Line deflection current, edge to edge at 25 kV	2,23 A (p-p)
Inductance of line coils, parallel connected	2,50 mH
Field deflection current, edge to edge at 25 kV	0,40 A (p-p)
Resistance of field coils, series connected	47,2 Ω

APPLICATION

This deflection unit, in conjunction with devices for colour purity and static convergence is for 90° in-line colour picture tube A48EAC00X, with a neck diameter of 22,5 mm. The unit requires no raster correction circuitry.

DESCRIPTION

The deflection unit consists of saddle-shaped line deflection coils and toroidal wound field deflection coils, thus forming a hybrid yoke. The unit has a metal non-magnetic clamping ring at the rear, to fix the deflection unit on the neck of the picture tube. With the deflection unit positioned axially for optimum purity, a clearance is available at the front which permits adjustment of convergence by tilting the unit in the vertical and/or horizontal plane. Wedges are recommended to secure the deflection unit in the chosen position.

MECHANICAL DATA

Dimensions in mm

Outlines

The deflection unit fits a tube with a neck diameter of $22{,}5^{+1{,}4}_{-0{,}7}$ mm.

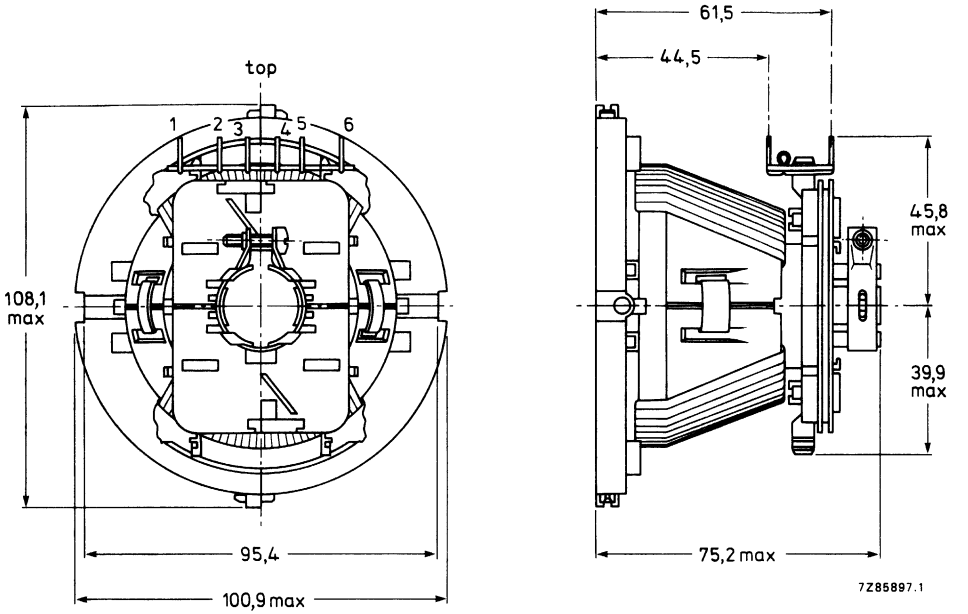

Fig. 1.

Maximum operating temperature (average copper temperature measured with resistance method)	+90 °C
Storage temperature range	−25 to +90 °C
Flame retardent	according to UL 1413, category 94-V1
Torque on neck clamp screw	1,0 Nm

ENVIRONMENTAL TEST SPECIFICATIONS

Vibration	IEC 68-2-6 (test Fc)
Shock	IEC 68-2-27 (test Ea)
Bump	IEC 68-2-29 (test Eb; 25g)
Cold	IEC 68-2-1 (test Ab)
Dry heat	IEC 68-2-2 (test Bb)
Damp heat, steady state	IEC 68-2-3 (test Ca)
Cyclic damp heat	IEC 68-2-30 (test Db)
Change of temperature	IEC 68-2-14 (test Nb)

ELECTRICAL DATA

Line coils	
Inductance at 1 V (r.m.s.), 1 kHz	2,50 mH ± 4%
Resistance at 25 °C	3,3 Ω ± 10%
Magnetic flux at 25 kV	5,57 mWb ± 2,5%
Line deflection current, edge to edge, at 25 kV	2,23 A (p-p)
Field coils	
Inductance at 1 V (r.m.s.), 1 kHz	110 mH ± 10%
Resistance at 25 °C	47,2 Ω ± 7%
Field deflection current, edge to edge, at 25 kV	0,40 A (p-p)
Cross talk	a voltage of 10 V, 15625 Hz applied to the line coils causes no more than 0,4 V across the field coils (damping resistors included)
Insulation resistance at 1 kV (d.c.)	
between line and field coils	> 500 MΩ
between line coil and core clamp	> 500 MΩ
between field coil and core clamp	> 10 MΩ

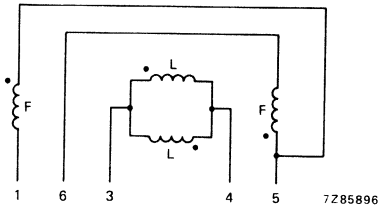

Fig. 2 Connection diagram, L = Line, F = Field.

ADJUSTMENT

- Adjust the static convergence with the four and six-pole magnets of the multipole unit AT1301 for the relative movement of the beams under influence of a four or six-pole magnet.
- Adjust colour purity by axial movement of the deflection unit and adjustment of the two-pole magnets for centring of the beams.
- Tighten the screw of the clamping ring on the deflection unit to secure the axial position of the unit on the picture tube.
- Readjust, if necessary, the convergence with the four and six-pole magnets.
- Tilt the unit in either horizontal or vertical direction, or in both directions so that blue, green and red lines converge at the end of the horizontal and vertical axis.
- This position of the unit has to be secured by three rubber wedges placed between the picture tube and the deflection unit. These wedges have to be cemented on to the picture tube.

20AX COLOUR PICTURE TUBE

Replacement type A51-510X.

Replaces A51-500X

20AX Hi-Bri COLOUR PICTURE TUBE

QUICK REFERENCE DATA

Deflection angle	110°
Face diagonal	51 cm
Overall length	35 cm
Neck diameter	36,5 mm
Envelope	reinforced; suitable for push-through
Magnetic shield	internal
Focusing	bi-potential
Deflection	magnetic
Heating	6,3 V, 720 mA
Light transmission of face glass	64%
Quick heating cathode	with a typical tube a legible picture will appear within approx. 5 s

Inherently self-converging system with deflection unit AT1085

MECHANICAL DATA

Overall length	351,4 ± 6,5 mm
Neck diameter	$36{,}5\ ^{+1{,}6}_{-0}$ mm
Bulb dimensions	
diagonal	max. 515,5 mm
width	max. 442,5 mm
height	max. 343,8 mm
Useful screen dimensions	
diagonal	min. 480,0 mm
horizontal axis	min. 404,4 mm
vertical axia	min. 303,3 mm
Base	12-pin base IEC 67-I-47a, type 2
Anode contact	small cavity contact J1-21, IEC 67-III-2

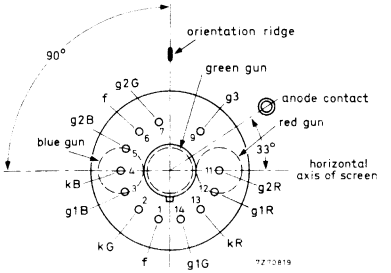

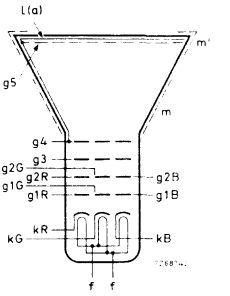

TYPICAL OPERATING CONDITIONS

The voltages are specified with respect to grid 1.

Final accelerator voltage	$V_{a,g5,g4}$	25 kV
Grid 3 (focusing electrode) voltage	V_{g3}	4,0 to 4,8 kV
Grid 2 voltage for a spot-cut-off voltage V_k = 140 V	V_{g2}	465 to 705 V
Cathode voltage for spot cut-off at V_{g2} = 555 V	V_k	110 to 165 V

30AX COLOUR PICTURE TUBE

- Automatic snap-in raster orientation
- Push-on axial purity positioning
- Internal magneto-static beam alignment
- Hi-Bi gun with quadrupole cathode lens
- Self-aligning, self-converging assembly with low power consumption, when combined with deflection unit AT 1850
- North-south pin-cushion distortion-free
- 110° deflection
- Hi-Bri screen
- Pigmented phosphors: enhanced contrast
- Phosphor lines follow glass contour
- In-line gun
- Standard 36,5 mm neck
- Soft-Flash technology
- Slotted shadow mask optimized for minimum moiré
- Fine pitch over entire screen
- Quick-heating cathodes
- Internal magnetic shield
- Anti-crackle coating
- Reinforced envelope for push-through mounting

QUICK REFERENCE DATA

Deflection angle	110°
Face diagonal	51 cm
Overall length	36 cm
Neck diameter	36,5 mm
Heating	6,3 V, 720 mA
Focusing voltage	28% of anode voltage

ELECTRON-OPTICAL DATA

Electron gun system	in-line with separate grids
Focusing method	electrostatic
Focus lens	hi-bi potential
Deflection method	magnetic
Deflection angles	
diagonal	110°
horizontal	97°
vertical	77°

ELECTRICAL DATA

Capacitances				
anode to external conductive coating	$C_{a, g5, g4/m}$	max.	1400	pF
		min.	900	pF
anode to metal rimband	$C_{a, g5, g4/m'}$		250	pF
grid of any gun to all other electrodes	$C_{g\,1R}$, $C_{g\,1G}$, $C_{g\,1B}$		7	pF
cathodes of all guns (connected in parallel) to all other electrodes	C_k		12	pF
cathode of any gun to all other electrodes	C_{kR}, C_{kG}, C_{kB}		4	pF
grid 3 (focusing electrode) to all other electrodes	C_{g3}		7	pF
Resistance between rimband and external conductive coating		min.	50	MΩ
Heating: indirect by a.c. (preferably mains or line frequency) or d.c.				
heater voltage	V_f		6,3	V
heater current	I_f		720	mA

OPTICAL DATA

Screen	metal-backed vertical phosphor stripes; phosphor lines follow glass contour
Screen finish	satinized
Useful screen dimensions	
diagonal	min. 480,0 mm
horizontal axis	min. 404,4 mm
vertical axis	min. 303,3 mm
→ area	min. 1190 cm^2
Positional accuracy of the screen with respect to the glass contour	see Figure on the next page
Phosphors	
red	pigmented europium activated rare earth
green	sulphide type
blue	pigmented sulphide type

A = 170,7 mm
B = 215,5 mm
C = 115,1 mm
D = 162,8 mm
E = 31,5 mm

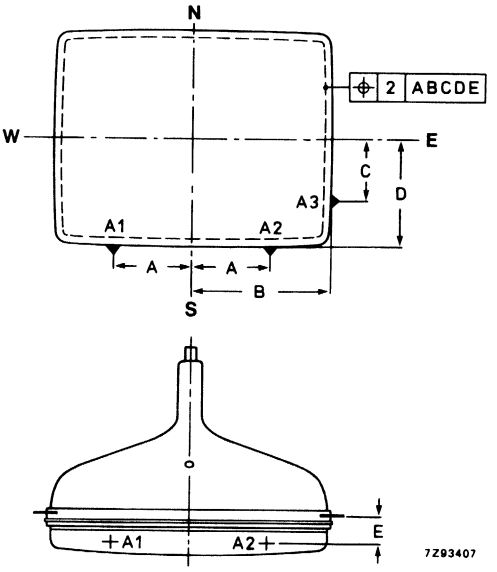

		x	y
Colour co-ordinates			
red		0,635	0,340
green		0,315	0,600
blue		0,150	0,060
Centre-to-centre distance of identical colour phosphor stripes		approx. 0,8 mm	
Light transmission of face glass		64%	
Luminance at the centre of the screen	L	160 cd/m² *	

MECHANICAL DATA (see also the figures on the following pages)

Overall length	361,4 ± 6 mm
Neck diameter	$36{,}5\ ^{+\ 1{,}3}_{-\ 0}$ mm
Base	12-pin base IEC 67-I-47a, type 2
Anode contact	cavity cap JEDEC J1-21, IEC 67-III-2
Mounting position	anode contact on top
Rimband	provided with 18 slots to accommodate clips for mounting of degaussing coils
Net mass	approx. 12 kg

Handling

During shipment and handling the tube should not be subjected to accelerations greater than 350 m/s² in any direction.

* Tube settings adjusted to produce white D (x = 0,313, y = 0,329), focused raster, current density 0,4 μA/cm².

MECHANICAL DATA (continued)

Dimensions in mm

Notes are given after the drawings.

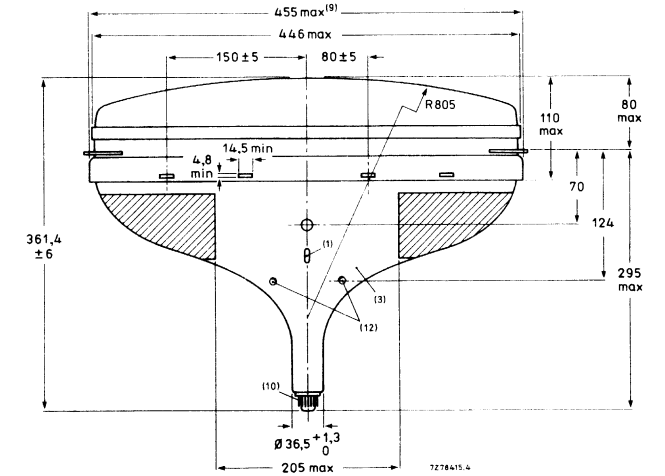

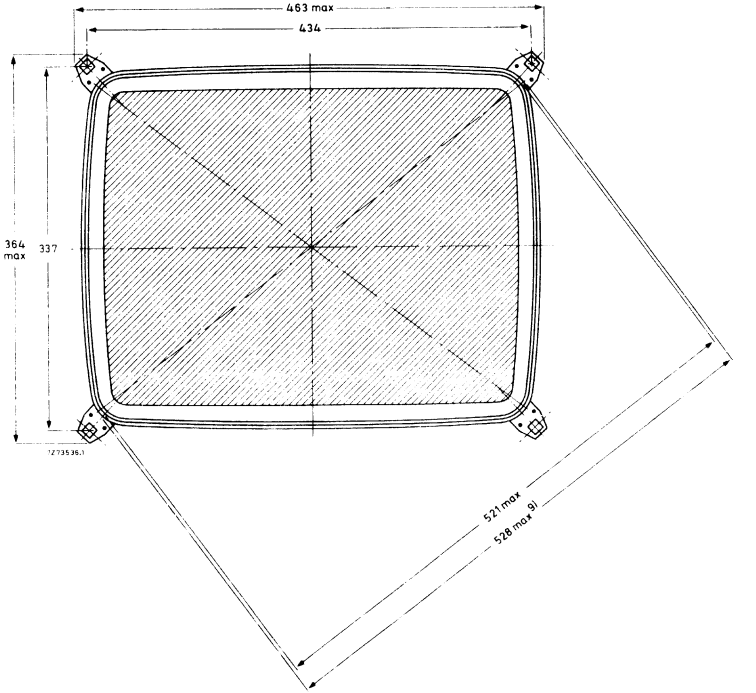

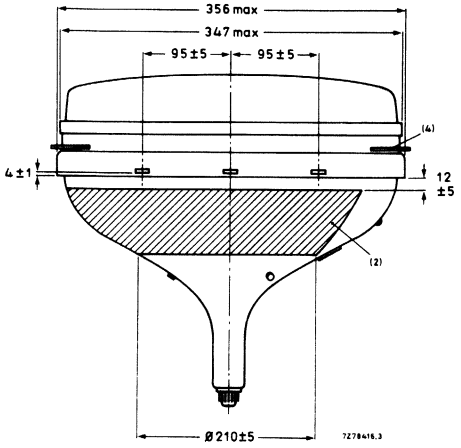

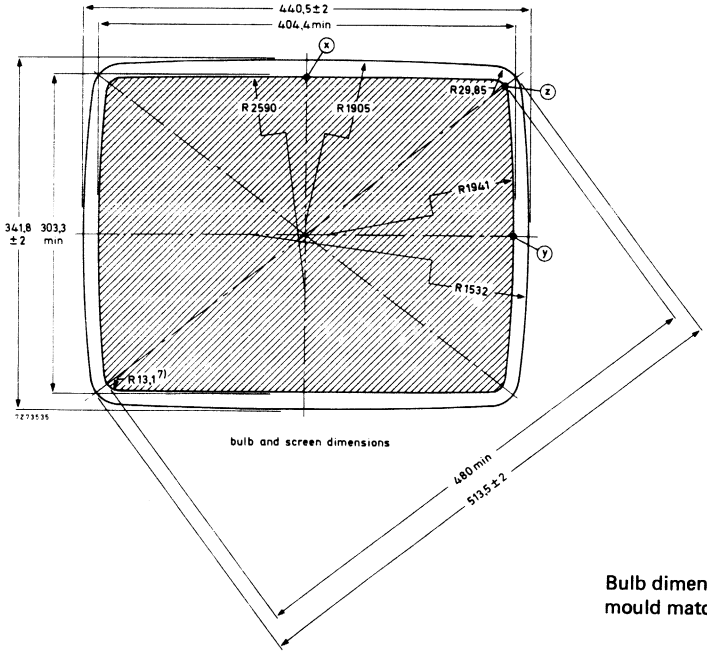

Bulb dimensions at mould match line.

MECHANICAL DATA (continued)

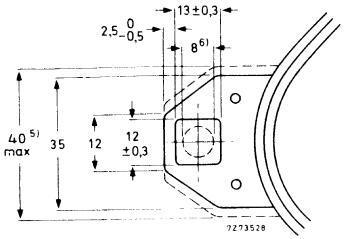

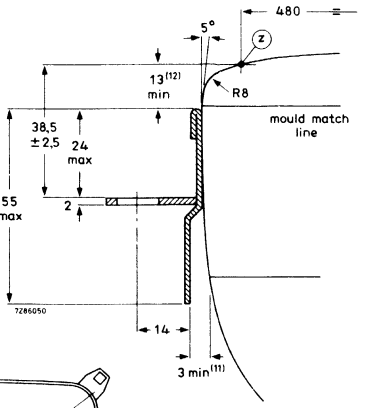

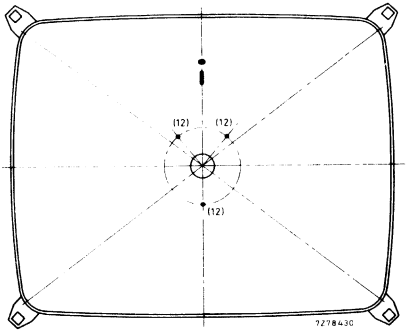

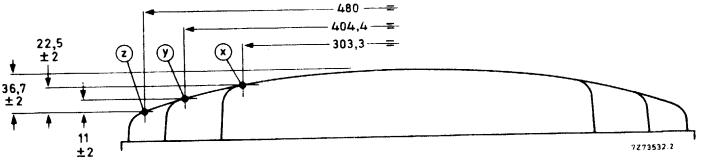

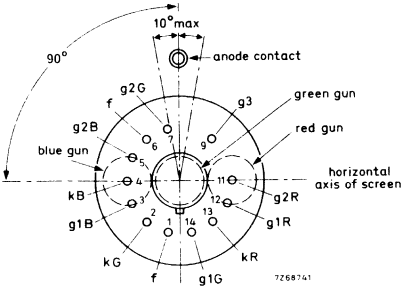

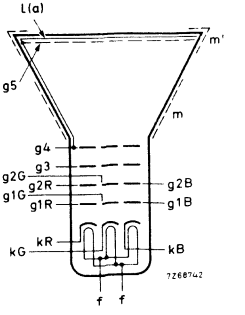

Notes to outline drawings on the preceding pages

1. This ridge can be used as an orientation for the deflection unit.
2. Configuration of outer conductive coating may be different, but will contain the contact area as shown in the drawing.
3. To clean this area, wipe only with a soft lintless cloth.
4. The displacement of any lug with respect to the plane through the three other lugs is max. 2 mm.
5. Minimum space to be reserved for mounting lug.
6. The position of the mounting screw in the cabinet must be within a circle of 8 mm diameter drawn around the true geometrical positions, i.e. the corners of a rectangle of 434 mm x 337 mm.
7. Co-ordinates for radius R = 13,1 mm: x = 184,58 mm, y = 131,93 mm.
8. Distance from point z to any hardware.
9. Maximum dimensions in plane of lugs.
10. The socket for this base should not be rigidly mounted; it should have flexible leads and be allowed to move freely. The bottom circumference of the base will fall within a circle concentric with the tube axis and having a diameter of 55 mm.
    The mass of the mating socket with circuitry should not be more than 150 g; maximum permissible torque is 40 mNm.
11. Minimum distance between glass and rimband in plane of centre line of apertures.
12. Centring bosses for deflection unit.

Sagittal heights with reference to screen centre at the edge of the minimum useful screen

coordinates		sagittal
x	y	heights
mm	mm	mm
0*	151,7	14,6
20	151,6	14,9
40	151,3	15,6
60	150,9	16,8
80	150,4	18,4
100	149,7	20,5
120	148,8	23,1
140	147,8	26,1
160	146,7	29,7
180	145,4	33,8
195,4**	139,5	36,4
197,9	130	35,3
198,6	120	33,9
199,7	100	31,3
200,6	80	29,3
201,4	60	27,6
201,9	40	26,5
202,2	20	25,9
202,3▲	0	25,5

* Point (x).
** Diagonal.
▲ Point (y).

12-pin base, IEC 67-I-47a, type 2

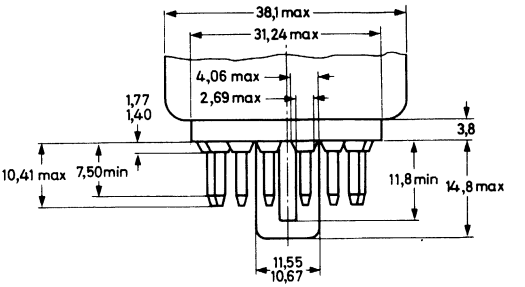

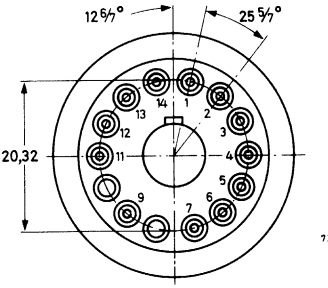

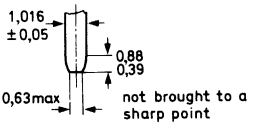

pin contour

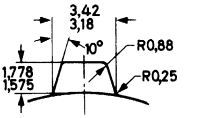

detail of key

Cavity cap JEDEC J1-21, IEC 67-III-2

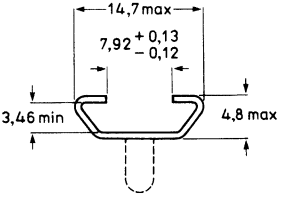

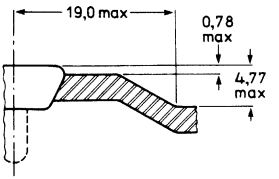

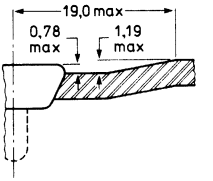

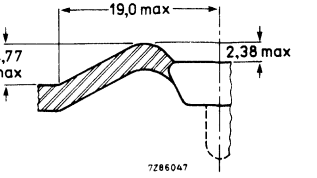

Maximum cone contour

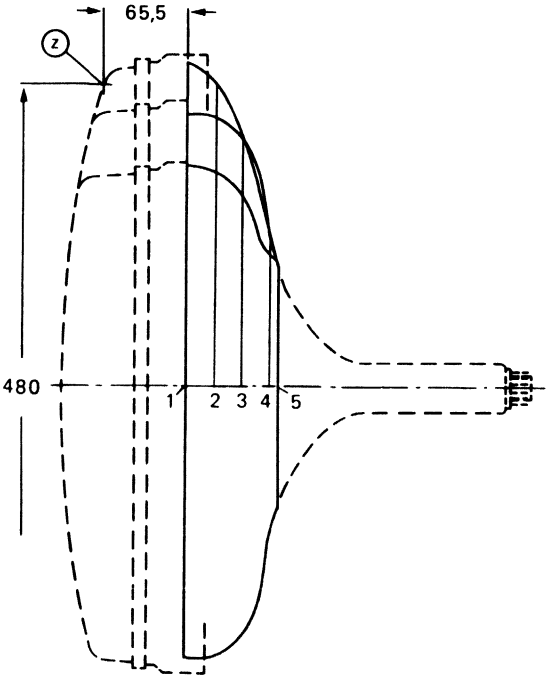

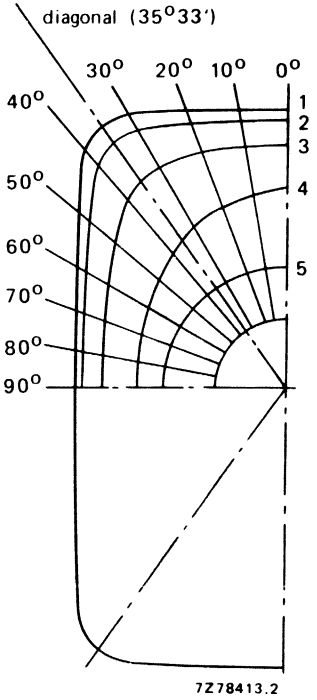

section	nom. distance from section 1	distance from centre (max. values)										
		0°	10°	20°	30°	diag.	40°	50°	60°	70°	80°	90°
1	0	222	225	236	254	258	252	217	193	178	172	170
2	20	216	217	226	240	244	238	205	185	172	165	163
3	40	195	195	200	204	205	198	180	166	156	150	148
4	60	162	158	154	148	144	141	134	128	123	121	121
5	74	98	98	98	98	98	98	98	98	98	98	98

RECOMMENDED OPERATING CONDITIONS (cathode drive)

The voltages are specified with respect to grid 1.

Anode voltage	$V_{a, g5, g4}$	25 kV
Grid 3 (focusing electrode) voltage	V_{g3}	6,5 to 7,45 kV

A. **Operation at equal spot cut-off voltage V_k = 140 V**

Grid 2 voltage (V_{g2}) adjusted for each gun separately; V_{g2} range 590 to 800 V.

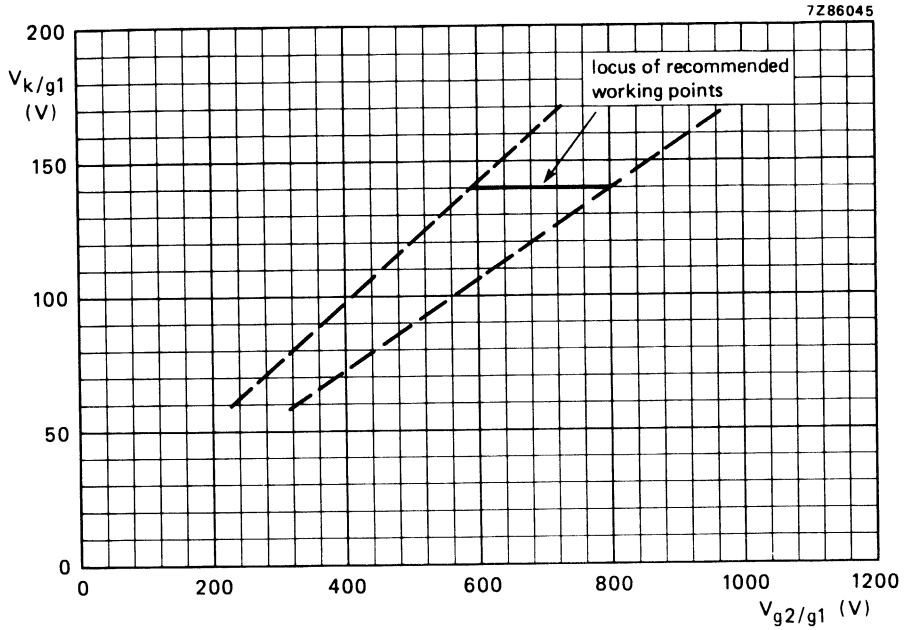

Spot cut-off design chart.

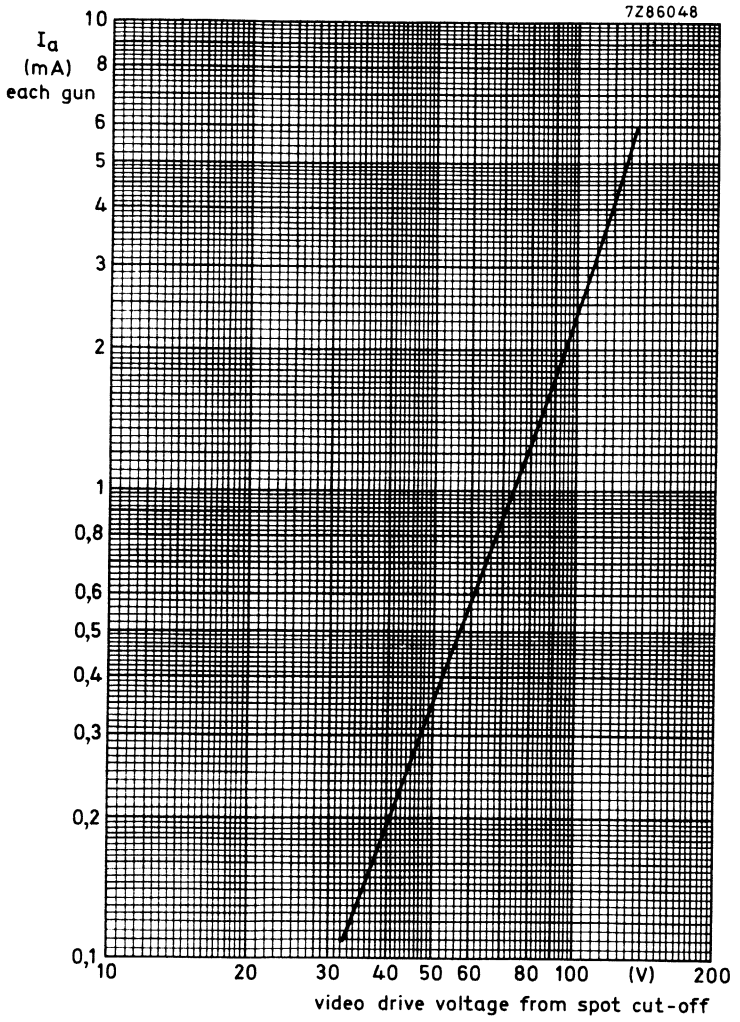

Typical cathode drive characteristic.

V_f = 6,3 V ;

$V_{a,\ g5,\ g4}$ = 25 kV;

V_{g3} adjusted for focus;

V_{g2} (each gun) adjusted to provide spot cut-off for V_k = 140 V.

B. Operation at equal grid 2 voltage

Grid 2 voltage (V_{g2}) adjusted for highest gun spot cut-off voltage V_k = 150 V.

Remaining guns adjusted for spot cut-off by means of cathode voltage.

V_{g2} range 630 to 860 V.

V_k range 120 to 150 V.

Adjustment procedure:

Set the cathode voltage (V_k) for each gun at 150 V; increase the grid 2 voltage (V_{g2}) from approx. 600 V to the value at which one of the colours becomes just visible. Now decrease the cathode voltage of the remaining guns so that the other colours also become visible.

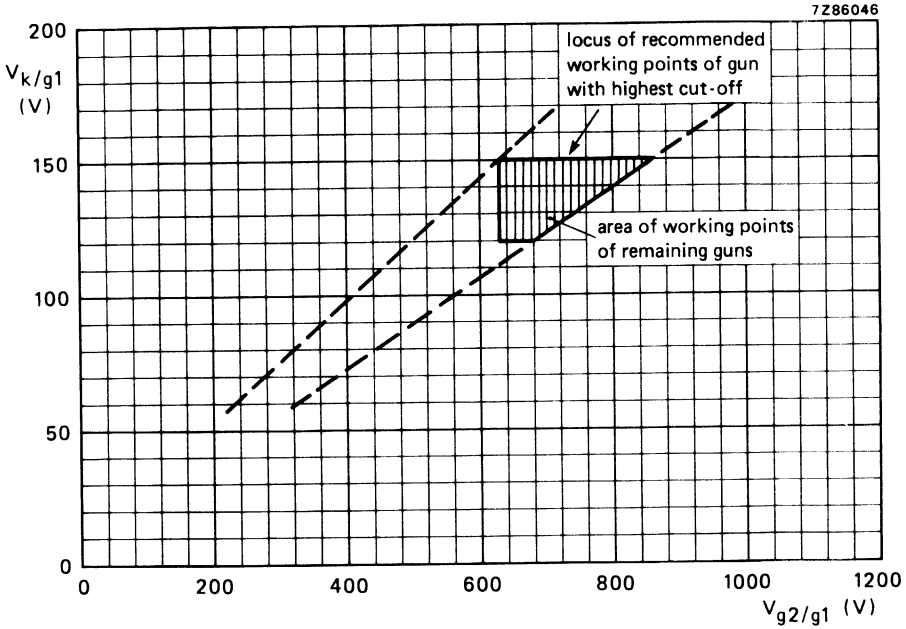

Spot cut-off design chart.

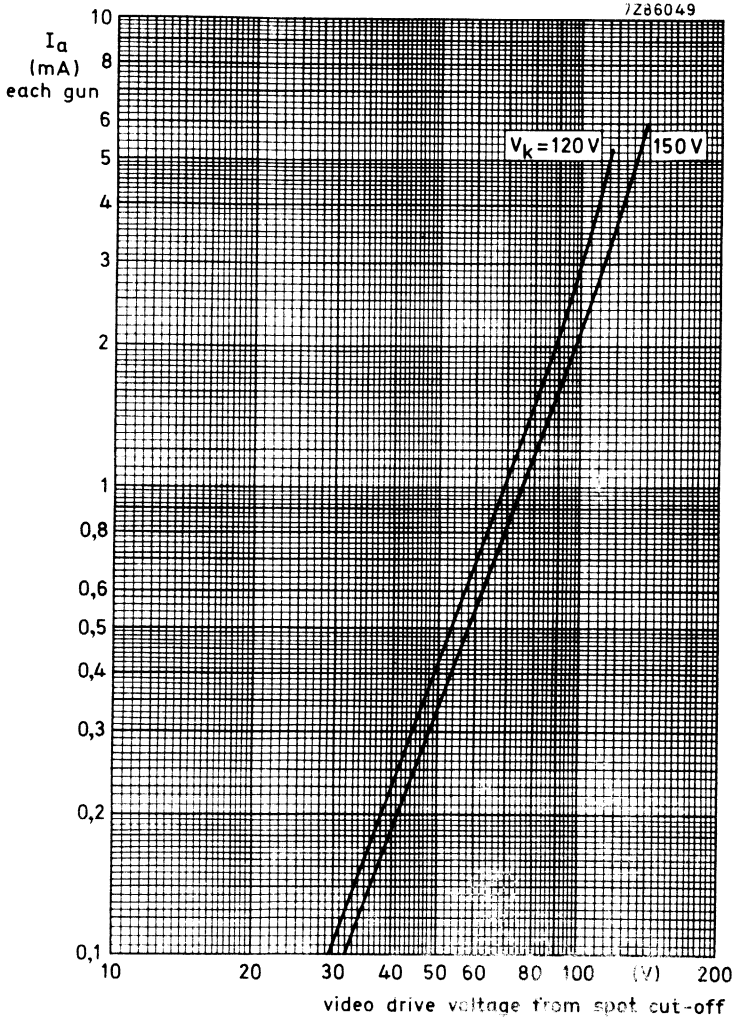

Typical cathode drive characteristic.

V_f = 6,3 V;

$V_{a, g5, g4}$ = 25 kV;

V_{g3} adjusted for focus;

V_{g2} (each gun) adjusted to provide spot cut-off for V_k = 120 V and 150 V.

EQUIPMENT DESIGN VALUES (each gun if applicable)

The values are valid for anode voltages between 22,5 and 27,5 kV.
The voltages are specified with respect to grid 1.

Grid 3 (focusing electrode) voltage	V_{g3}	26 to 29,8% of anode voltage
Difference in cut-off voltage between guns in one tube	ΔV_k	lowest value is min. 80% of highest value
Heater voltage	V_f	6,3 V at zero beam current
Grid 3 (focusing electrode) current	I_{g3}	−5 to + 5 μA
Grid 2 current	I_{g2}	−5 to + 5 μA
Grid 1 current at V_k = 140 V	I_{g1}	−5 to + 5 μA

To produce white D, CIE co-ordinates x = 0,313, y = 0,329.

Percentage of the total anode current supplied by each gun (typical)

red gun	38,3%
green gun	35,8%
blue gun	25,9%

Ratio of anode current	min.	av.	max.
red gun to green gun	0,7	1,1	1,4
red gun to blue gun	1,1	1,5	2,0
blue gun to green gun	0,5	0,7	1,0

BEAM CENTRING

Maximum centring error in any direction	4,5 mm

LIMITING VALUES (each gun if applicable)

Design maximum rating system unless otherwise stated.

The voltages are specified with respect to grid 1.

Anode voltage	$V_{a,\ g5,\ g4}$	max.	27,5	kV	notes 1, 2, 3
		min.	22,5	kV	note 4
Long-term average current for three guns	I_a	max.	1000	μA	note 5
Grid 3 (focusing electrode) voltage	V_{g3}	max.	9	kV	
Grid 2 voltage	V_{g2}	max.	1200	V	note 6
Cathode voltage					
positive	V_k	max.	400	V	
positive operating cut-off	V_k	max.	200	V	
negative	$-V_k$	max.	0	V	
negative peak	$-V_{kp}$	max.	2	V	
Cathode to heater voltage					
positive	V_{kf}	max.	250	V	
positive peak	V_{kfp}	max.	300	V	note 1
negative	$-V_{kf}$	max.	135	V	
negative peak	$-V_{kfp}$	max.	180	V	note 1
Heater voltage	V_f	6,3 V	+5 / −10	%	notes 1, 7

Notes

1. Absolute maximum rating system.
2. The X-ray dose rate remains below the acceptable value of 36 pA/kg (0,5 mR/h), measured with ionization chamber when the tube is used within its limiting values.
3. During adjustment on the production line this value is likely to be surpassed considerably. It is therefore strongly recommended to first make the necessary adjustments for normal operation without picture tube.
4. Operation of the tube at lower voltages impairs the luminance and resolution, and could impair convergence.
5. The short-term average anode current should be limited by circuitry to 1500 μA.
6. During adjustment on the production line max. 1500 V is permitted.
7. For maximum cathode life and optimum performance it is recommended that the heater supply be designed for 6,3 V at zero beam current.

FLASHOVER PROTECTION

High electric field strengths are present between the gun electrodes of picture tubes. Voltages between gun electrodes may reach values of 20 kV over approx. 1 mm. As a result of the Soft-Flash technology these flashover currents are limited to approx. 60 A offering higher set reliability, optimum circuit protection and component savings.

Primary protective circuitry using properly grounded spark gaps and series isolation resistors (preferably carbon composition) is still necessary to prevent tube damage and damage to the circuitry which is directly connected to the tube socket. The spark gaps should be connected to all picture tube electrodes at the socket according to the figure below; they are not required on the heater pins. No other connections between the outer conductive coating and the chassis are permissible. The spark gaps should be designed for a breakdown voltage at the focusing electrode (g3) of 10,5 kV, and at the other electrodes of 1,5 to 2 kV. The values of the series isolation resistors should be as high as possible (min 1,5 kΩ) without causing deterioration of the circuit performance. The resistors should be able to withstand an instantaneous surge of 20 kV for the focusing circuit and 12 kV for the remaining circuits without arcing.

Additional information is available on request.

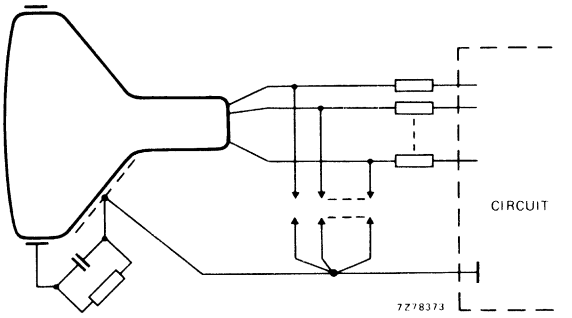

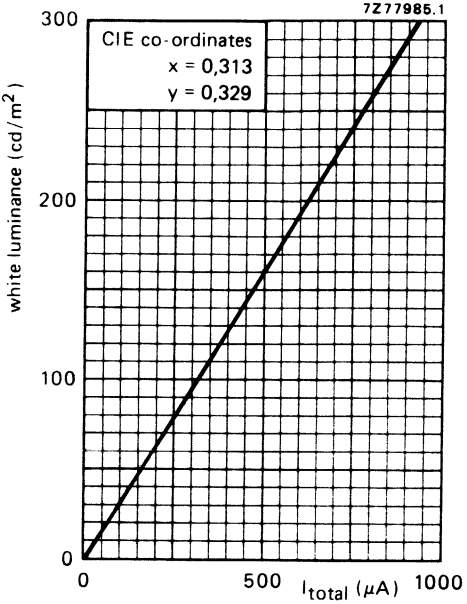

Luminance at the centre of the screen as a function of I_{total}. Scanned area 518 mm x 390 mm.

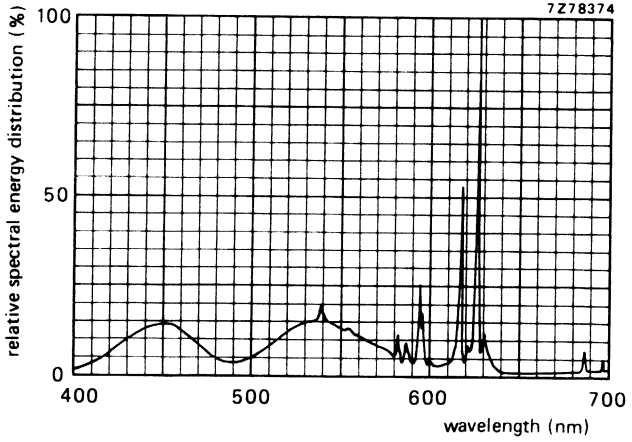

Simultaneous excitation of red, green and blue phosphor, measured in a tube, to provide white of x = 0,313, y = 0,329. Exact shape of the peaks depends on the resolution of the measuring apparatus.

Colour co-ordinates:	x	y
red	0,635	0,340
green	0,315	0,600
blue	0,150	0,060

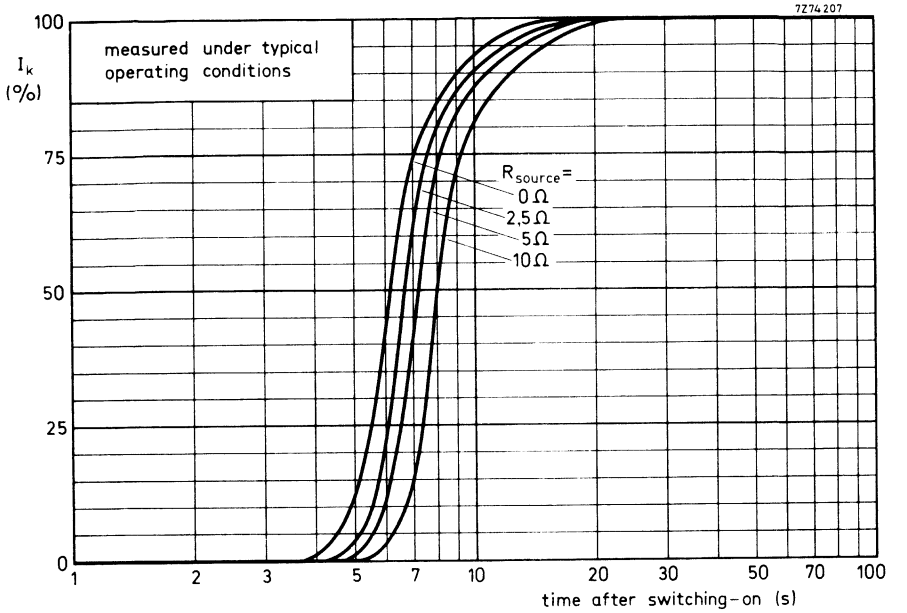

Cathode heating time to attain a certain percentage of the cathode current at equilibrium conditions.

DEGAUSSING

The picture tube is provided with an internal magnetic shield. This shield and the shadow mask with its suspension system may be provided with an automatic degaussing system, consisting of two coils covering top and bottom cone parts.

For proper degaussing an initial magnetomotive force (m.m.f.) of 250 ampere-turns is required in each of the coils. This m.m.f. has to be gradually decreased by appropriate circuitry. To prevent beam landing disturbances by line-frequency currents induced in the degaussing coils, these coils should be shunted by a capacitor of sufficiently high value. In the steady state, no significant m.m.f. should remain in the coils ($\leqslant$ 0,25 ampere turns).

If single-phase power rectification is employed in the TV circuitry, provision should be included to prevent asymmetric distortion of the a.c. voltage applied to the degaussing circuit due to high d.c. inrush currents.

To ease the mounting of the coils, the rimband is provided with rectangular holes. An example is given below.

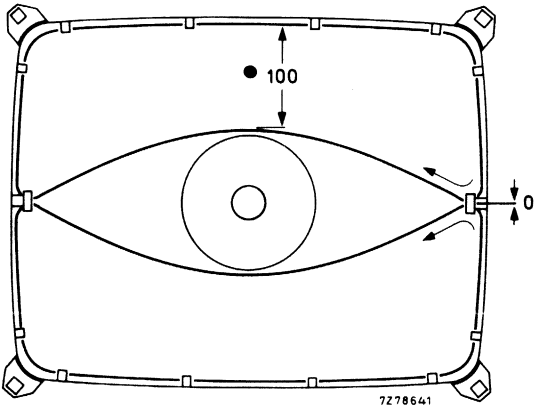

Position of degaussing coils on the picture tube.

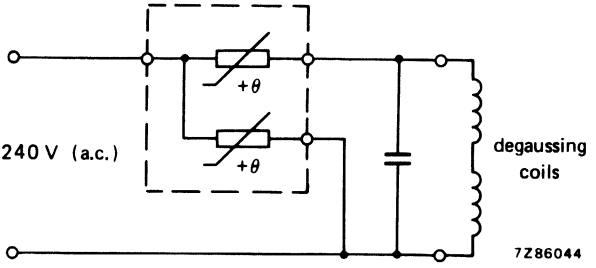

Degaussing circuit using dual PTC thermistor 2322 662 98009.

Data of each degaussing coil

Circumference	120 cm
Number of turns	50
Copper-wire diameter	0,35 mm
Aluminium-wire diameter	0,45 mm
Resistance	11 Ω

Replaced by AT1850

DEFLECTION UNIT

QUICK REFERENCE DATA

Picture tube gun arrangement	in line
diagonal	51 cm (20 in)
neck diameter	36,5 mm
Deflection angle	110°
Line deflection current, edge to edge at 25 kV	4,8 A(p-p)
Inductance of line coils	1,53 mH
Resistance of field coils (damping resistor R1 included)	6,2 Ω

CONNECTIONS

(See also Fig. 2).

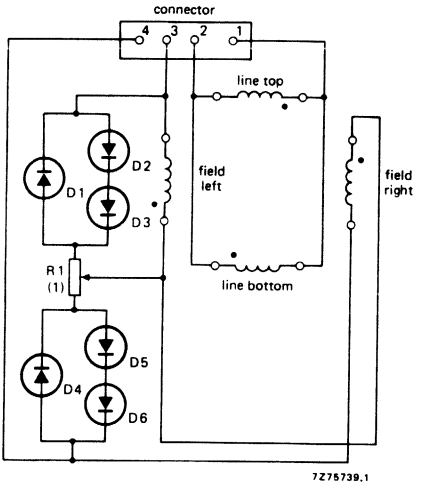

● Means winding direction.

Fig. 1.

Matching female Stocko connector MKF 804-1-0-404.
D1 to D6 = BAS11, BAX18 or BAX18A.

(1) R1 is factory adjusted and locked with adhesive.

MECHANICAL DATA

Outlines

Dimensions in mm

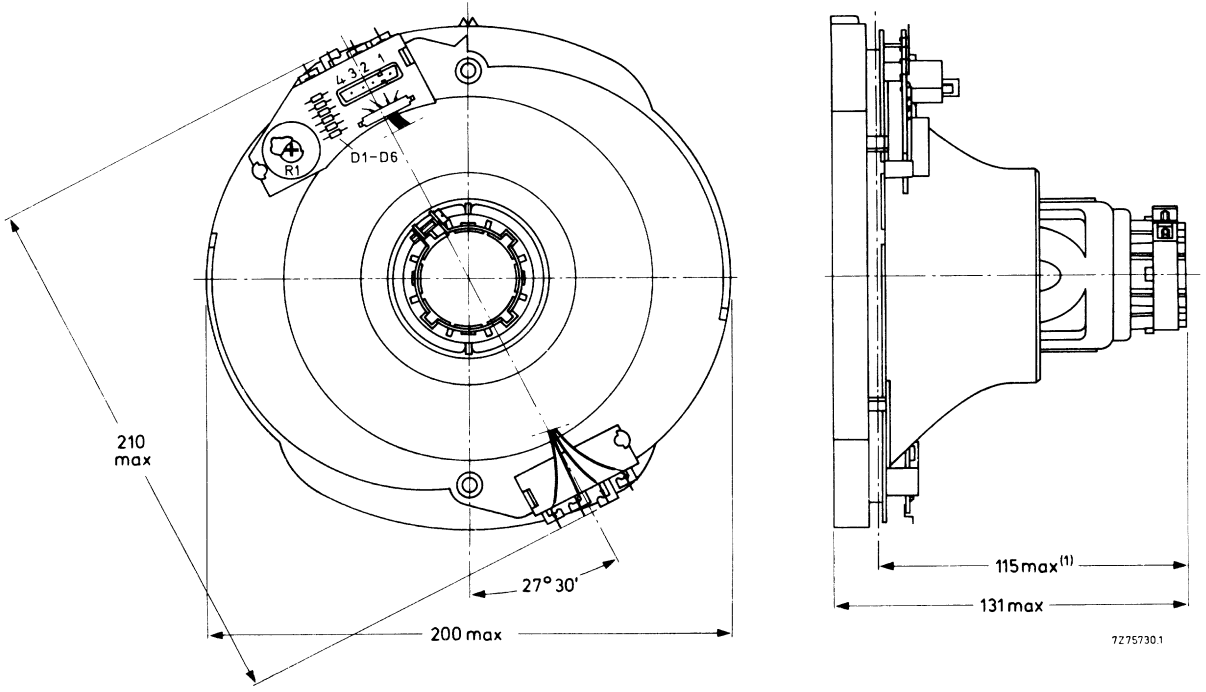

(1) Reference plane of centring bosses.

Fig. 2.

DEFLECTION UNIT

QUICK REFERENCE DATA

Picture tube gun arrangement	in line
diagonal	51 cm (20 in)
neck diameter	36,5 mm
Deflection angle	110°
Line deflection current, edge to edge at 25 kV	4,8 A p-p
Inductance of line coils	1,53 mH
Resistance of field coils (damping resistor R1 included)	6,2 Ω

APPLICATION

This deflection unit has been designed for use with a 110° colour picture tube type A51-540X in CTV receivers in conjunction with e.g.:

diode-split line output transformer	AT2076/70A
line output transistor	BU208A
linearity control unit	AT4042/42

DESCRIPTION

The deflection unit consists of flangeless line and field coils, a one piece ferrite ring and a one piece coil carrier.

MECHANICAL DATA

Outlines

Dimensions in mm

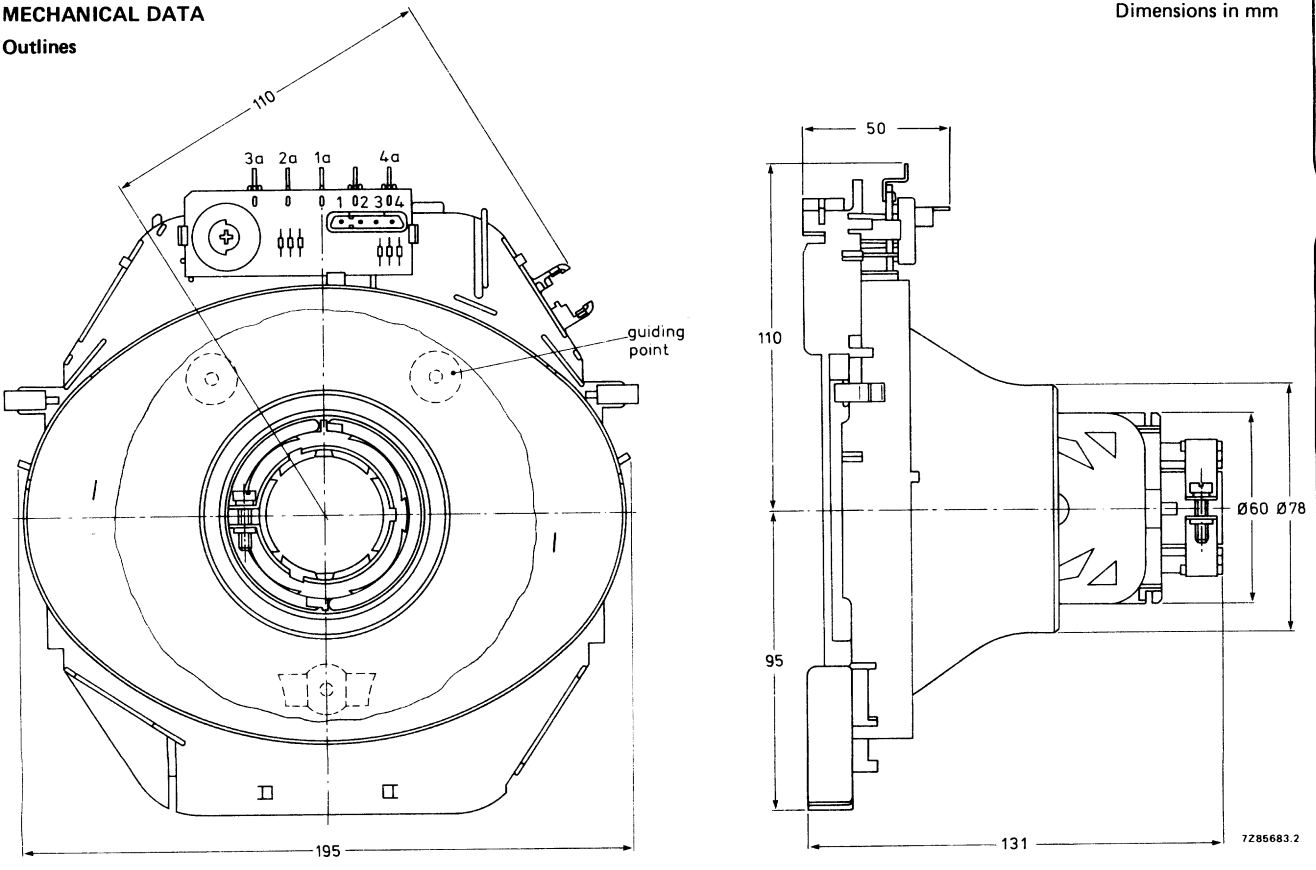

Fig. 1.

Mounting

The deflection unit can simply be pushed on the neck of a picture tube.

Both on the neck of the tube and on the deflection unit, there are 3 reference surfaces to establish angular and axial positioning.

Once the unit is mounted the combination is perfectly aligned and requires no further adjustment for static convergence, colour purity and raster orientation.

The unit must be pressed against the reference surfaces on the cone of the picture tube with a force of 20 ± 5 N and fixed by tightening the screw in the clamping ring at the rear with a torque of $1{,}0\ ^{+0{,}4}_{-0{,}2}$ Nm.

Maximum axial force exerted on the screw is 20 N.

ELECTRICAL DATA

Line coils	
inductance	1,53 mH ± 4%
resistance at 25 °C	1,4 Ω ± 10%
Magnetic flux at 25 kV	7,5 mWb ± 5%
Line deflection current edge to edge at 25 kV	4,8 A p-p
Field coils	
inductance	9,7 mH ± 10%
resistance at 25 °C (damping resistance R1 included)	6,2 Ω ± 7%
Field deflection current edge to edge at 25 kV	2,0 A p-p
Max. operating temperature	90 °C

Connections

(See also Fig. 1).

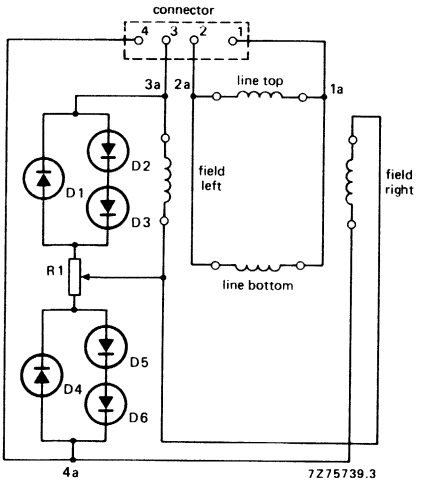

Fig. 2.

Matching female Stocko connector MKF 804-1-0-404.
D1 to D6 = BAS11, BAX18, BAX18A, BAV10 or BAW62.

R1 = 180 Ω.

Hi-Bri COLOUR PICTURE TUBE

- 90° deflection
- In-line gun, electrostatic bi-potential focus
- 29,1 mm neck diameter
- Hi-Bri screen with pigmented phosphors featuring high brightness and increased contrast performance
- Soft-Flash technology offering improved set reliability
- Slotted shadow mask optimized for minimum moire
- Fine pitch over entire screen
- Phosphor lines follow glass contour
- Quick-heating cathodes
- Internal magnetic shield
- Reinforced envelope for push-through mounting
- When combined with an appropriate hybrid saddle toroidal deflection unit (e.g. AT1237), it forms a self-converging assembly; dynamic convergence is not required.

QUICK REFERENCE DATA

Deflection angle	90°
Face diagonal	51 cm
Overall length	424 mm
Neck diameter	29,1 mm
Heating	6,3 V, 685 mA
Focusing voltage	20% of anode voltage

ELECTRON-OPTICAL DATA

Electron gun system		unitized triple-aperture electrodes
Focusing method		electrostatic
Focus lens		bi-potential
Deflection method		magnetic
Deflection angles		
diagonal		approx. 90°
horizontal		approx. 78°
vertical		approx. 60°

ELECTRICAL DATA

Capacitances		
anode to external conductive coating including rimband	$C_{a(m+m')}$	max. 2300 pF min. 1500 pF
grid 1 to all other electrodes	C_{g1}	15 pF
cathode of each gun to all other electrodes	C_{kR}, C_{kG}, C_{kB}	5 pF
focusing electrode to all other electrodes	C_{g3}	6 pF
Heating		indirect by a.c. or d.c.
heater voltage	V_f	6,3 V
heater current	I_f	685 mA

OPTICAL DATA

Screen	metal-backed vertical phosphor stripes; phosphor lines follow glass contour
Screen finish	satinized
Useful screen dimensions	
diagonal	min. 480,0 mm
horizontal axis	min. 404,4 mm
vertical axis	min. 303,3 mm
area	min. 1190 cm^2
Phosphors	
red	pigmented europium activated rare earth
green	sulphide type
blue	pigmented sulphide type
Centre-to-centre distance of vertical identical colour phosphor stripes, at screen centre	0,8 mm
Light transmission of face glass at centre	64%

MECHANICAL DATA (see also the figures on the following pages)

Overall length	424 ± 5 mm
Neck diameter	$29{,}1\ ^{+\,1{,}4}_{-0{,}7}$ mm *
Bulb dimensions	
diagonal	max. 515,5 mm
width	max. 442,5 mm
height	max. 343,8 mm
Base	12-pin base JEDEC B12-262
Anode contact	small cavity contact J1-21, IEC 67-III-2
Mounting position	anode contact on top
Net mass	approx. 13 kg

Handling

During shipment and handling the tube should not be subjected to accelerations greater than 35g in any direction.

* In the region of 70 mm from the neck end, the maximum diameter is 30 mm.

MECHANICAL DATA (continued)

Dimensions in mm

Notes are given after the drawings.

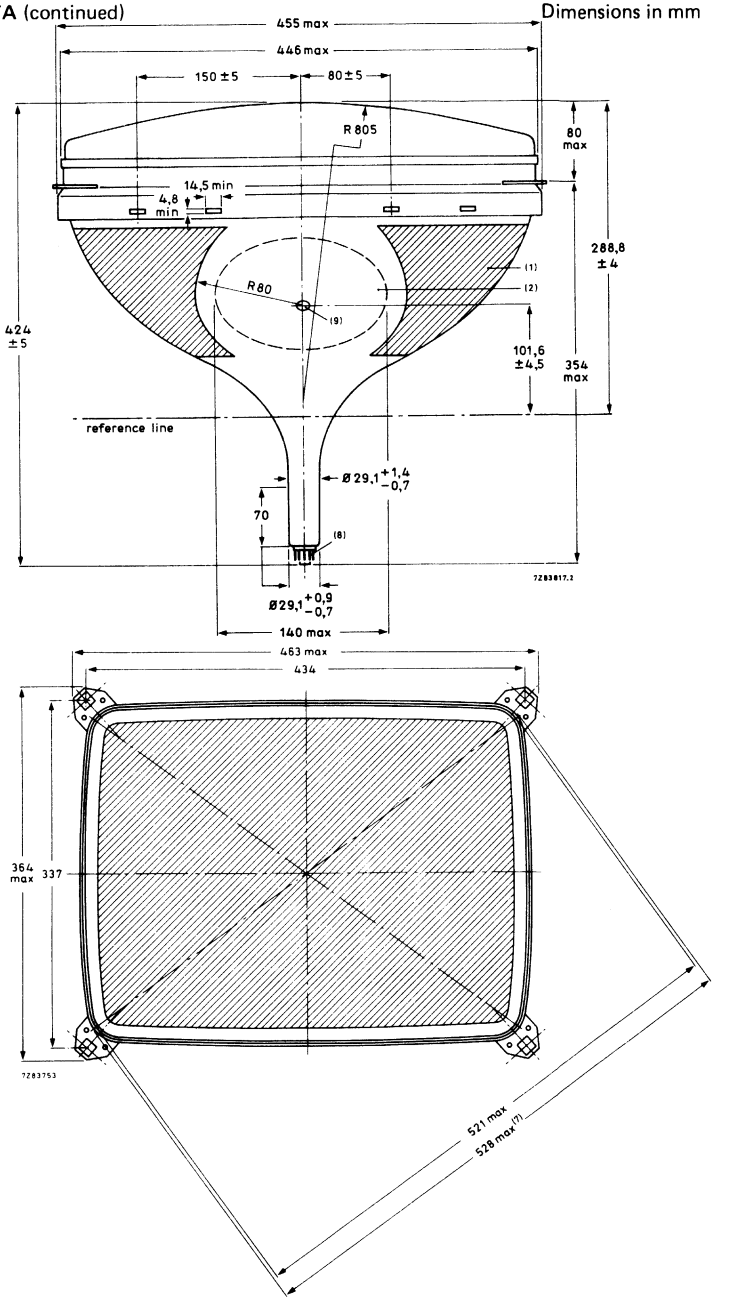

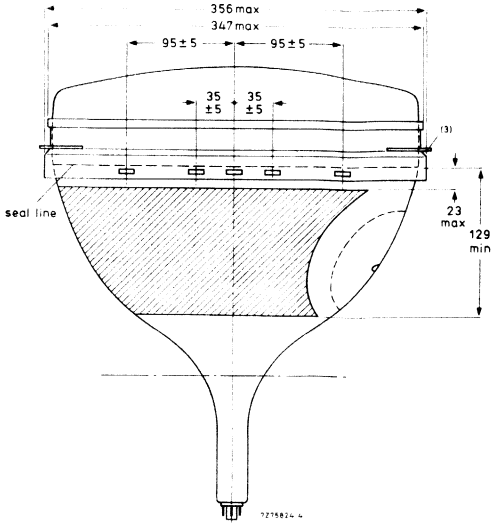

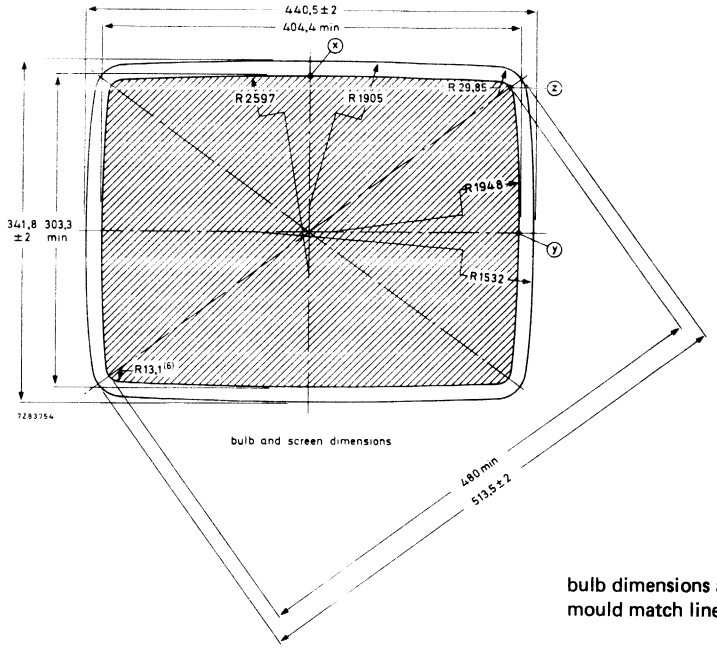

bulb and screen dimensions

bulb dimensions at mould match line

MECHANICAL DATA (continued)

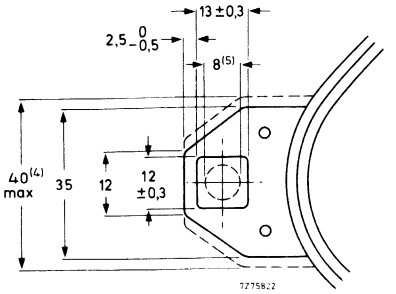

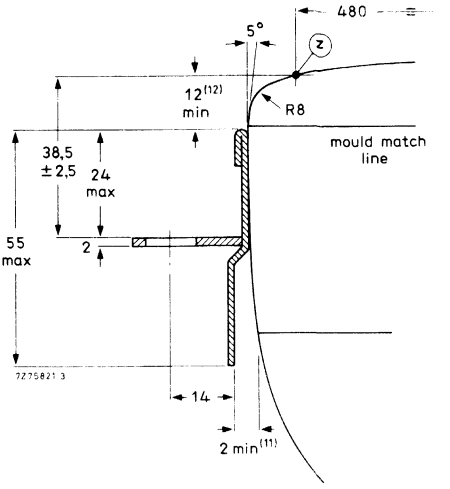

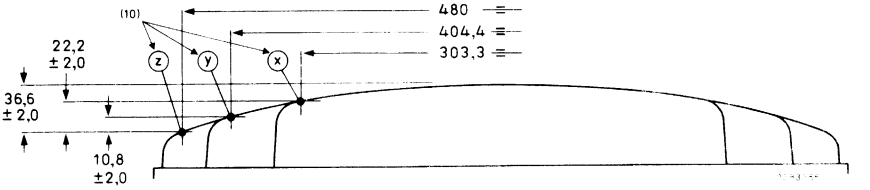

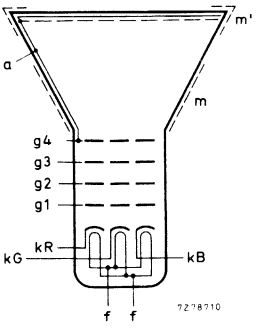

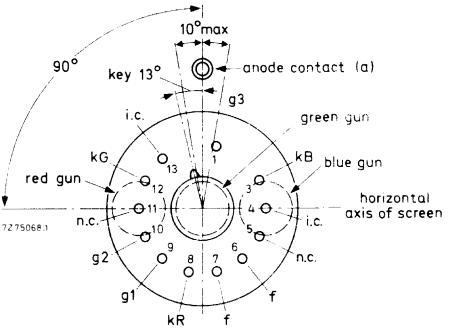

i.c. = internally connected (not to be used)
n.c. = not connected

Notes to outline drawings on the preceding pages

1. Configuration of outer conductive coating may be different, but will contain the contact area as shown in the drawing.
2. To clean this area, wipe only with a soft lintless cloth.
3. The displacement of any lug with respect to the plane through the three other lugs is max. 2 mm.
4. Minimum space to be reserved for mounting lug.
5. The position of the mounting screw in the cabinet must be within a circle of 8 mm diameter drawn around the true geometrical positions, i.e. the corners of a rectangle of 434 mm x 337 mm.
6. Co-ordinates for radius R = 13,1 mm; x = 184,58 mm, y = 131,93 mm.
7. Maximum dimensions in plane of lugs.
8. The socket for this base should not be rigidly mounted: it should have flexible leads and be allowed to move freely. The bottom circumference of base will fall within a circle concentric with the tube axis and having a diameter of 50 mm.
9. Small cavity contact J1-21, IEC 67-III-2.
10. The X, Y and Z reference points are located on the outside surface of the face plate at the intersection of the minor, major and diagonal screen axis respectively, with the minimum published screen.
11. Minimum distance between glass and rimband in plane of centre line apertures.
12. Distance from point z to any handware.

Reference line gauge; GR90CJ4

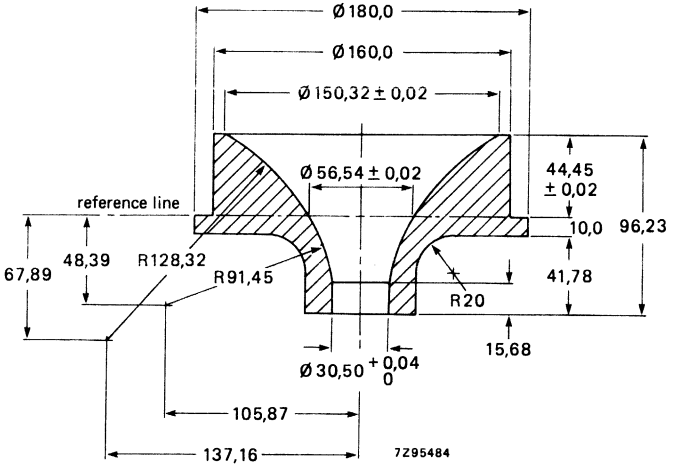

Maximum cone contour

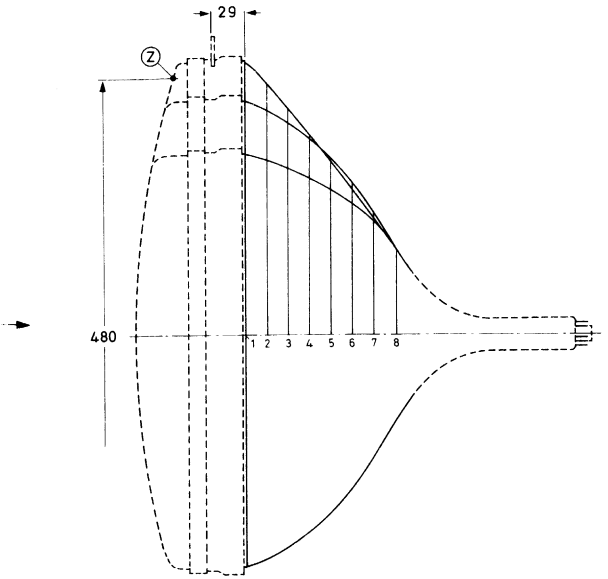

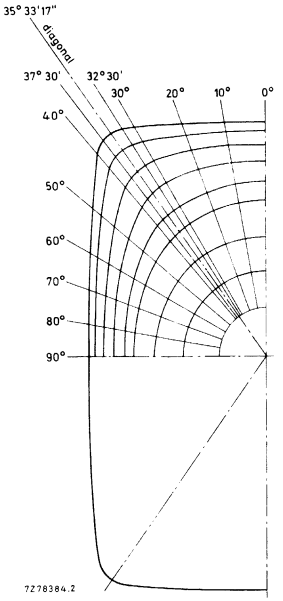

section	nom. distance from section 1	distance from centre (max. values)														
		0°	10°	20°	25°	30°	32° 30'	diag. axes	37° 30'	40°	45°	50°	60°	70°	80°	90°
1	0	218,7	221,9	231,2	238,5	247,5	252,2	255,9	254,6	247,7	230,1	215,1	193,0	179,2	171,5	169,0
2	20	209,8	212,4	220,3	226,0	232,5	235,3	236,5	235,0	230,2	216,9	204,4	184,9	172,3	165,3	163,0
3	40	197,5	199,4	204,7	208,1	211,1	211,9	211,4	210,0	207,0	198,6	189,5	173,9	163,2	157,1	155,1
4	60	182,2	183,2	185,8	187,1	187,7	187,4	186,4	185,3	183,3	178,2	172,1	160,7	152,4	147,4	145,8
5	80	163,2	163,5	163,9	163,7	163,1	162,4	161,4	160,6	159,3	156,3	152,9	145,8	140,1	136,6	135,4
6	100	146,1	146,1	145,7	145,1	144,2	143,6	142,8	142,2	141,4	139,5	137,5	133,3	129,7	127,3	126,5
7	120	112,3	112,3	111,9	111,7	111,3	111,1	110,9	110,7	110,5	110,0	109,5	108,6	107,8	107,3	107,1
8	141,7	79,8	79,8	79,8	79,8	79,8	79,8	79,8	79,8	79,8	79,8	79,8	79,8	79,8	79,8	79,8

12-pin base; JEDEC B12-262

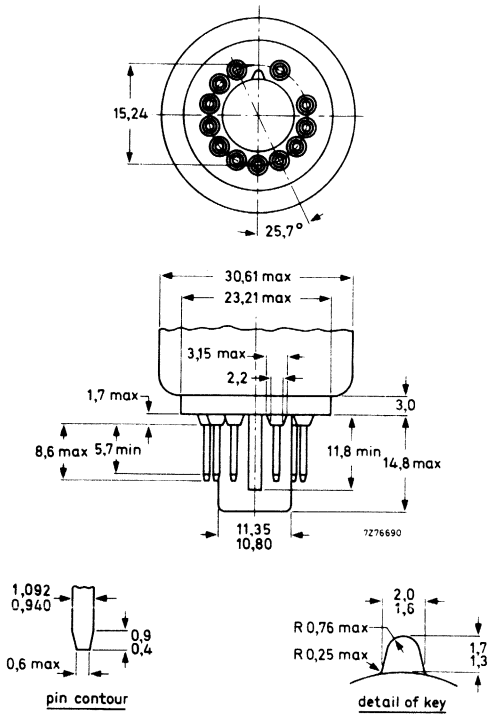

TYPICAL OPERATING CONDITIONS

The voltages are specified with respect to grid 1.

Anode voltageor voltage	$V_{a, g4}$	25 kV
Grid 3 (focusing electrode) voltage	V_{g3}	4,7 to 5,5 kV
Grid 2 voltage for a spot cut-off voltage V_k = 120 V	V_{g2}	310 to 560 V
Luminance at the centre of the screen*	L	170 cd/m²

* Tube settings adjusted to produce white of 6500K + 7 M.P.C.D. (x = 0,313, y = 0,329), focused raster, current density 0,4 μA/cm².

EQUIPMENT DESIGN VALUES

The values are valid for anode voltages between 20 and 27,5 kV.
The voltages are specified with respect to grid 1.

Grid 3 (focusing electrode) voltage	V_{g3}	18,8 to 22% of anode voltage
Grid 2 voltage and cathode voltage for visual extinction of focused spot	V_{g2} and V_k	see cut-off design chart *
Difference in cut-off voltages between guns in any tube	ΔV_k	lowest value > 80% of highest value
Video drive characteristics		see graphs **
Grid 3 (focusing electrode) current	I_{g3}	−5 to + 5 μA
Grid 2 current	I_{g2}	−5 to + 5 μA
Grid 1 current under cut-off conditions	I_{g1}	−5 to + 5 μA

To produce white of 6500K + 7 M.P.C.D. (CIE co-ordinates x = 0,313, y = 0,329)

Percentage of the total anode current supplied by each gun (typical)	
red gun	38,3%
green gun	35,8%
blue gun	25,9%

Ratio of anode current	min.	av.	max.
red gun to green gun	0,7	1,1	1,4
red gun to blue gun	1,1	1,5	2,0
blue gun to green gun	0,5	0,7	1,0

* The common V_{g2} should be adjusted as follows:
Set the cathode voltage, V_k, for each gun at 120 V. Increase the V_{g2} from about 300 V to the value at which the raster of one of the guns becomes just visible. Now decrease the V_k of the remaining guns so that the rasters of these guns also become visible.

** For optimum picture performance it is recommended that the cathodes are not driven below + 10 V.

LIMITING VALUES (Design maximum rating system unless otherwise stated)

The voltages are specified with respect to grid 1.

Anode voltage	$V_{a, g4}$	max.	27,5 kV	notes 1, 2 and 3
		min.	20 kV	note 4
Long-term average current for three guns	I_a	max.	1000 μA	note 5
Grid 3 (focusing electrode) voltage	V_{g3}	max.	7 kV	
Grid 2 voltage, peak	V_{g2p}	max.	1000 V	
Cathode voltage				
positive	V_k	max.	400 V	
positive operating cut-off	V_k	max.	200 V	
negative	$-V_k$	max.	0 V	
negative peak	$-V_{kp}$	max.	2 V	
Heater voltage	V_f	6,3 V	+ 5 % −10 %	notes 1 and 6
Heater-cathode voltage				
heater negative with respect to cathode				
during equipment warm-ip period				
not exceeding 15 s	V_{kf}	max.	450 V	note 1
after equipment warm-up period	V_{kf}	max.	250 V	
heater positive with respect to cathode	$-V_{kfp}$	peak	200 V	note 1
	$-V_{kf}$	max.	0 V	
		(d.c. component value)		

Notes

1. Absolute maximum rating system.
2. The X-ray dose rate remains below the acceptable value of 0,5 mR/h, measured with ionization chamber when the tube is used within its limiting values.
3. During adjustment on the production line this value is likely to be surpassed considerably. It is therefore strongly recommended to first make the necessary adjustments for normal operation without picture tube.
4. Operation of the tube at lower voltages impairs the luminance and resolution.
5. The short-term average anode current should be limited by circuitry to 1500 μA.
6. For maximum cathode life and optimum performance, it is recommended that the heater supply be designed for 6,3 V at zero beam current.

FLASHOVER PROTECTION

With the high voltage used with this tube (max. 27,5 kV) internal flashovers may occur. As a result of the Soft-Flash technology these flashover currents are limited to approx. 60 A offering higher set reliability, optimum circuit protection and component savings.
Primary protective circuitry using properly grounded spark gaps and series isolation resistors (preferably carbon composition) is still necessary to prevent tube damage. The spark gaps should be connected to all picture tube electrodes at the socket according to the figure below; they are not required on the heater pins. No other connections between the outer conductive coating and the chassis are permissible.
The spark gaps should be designed for a breakdown voltage at the focusing electrode (g3) of 8,5 kV ($1{,}5 \times V_{g3}$ max. at $V_{a,g4} = 25$ kV), and at the other electrodes of 1,5 to 2 kV.
The values of the series isolation resistors should be as high as possible (min. 1,5 kΩ) without causing deterioration of the circuit performance. The resistors should be able to withstand an instantaneous surge of 20 kV for the focusing circuit and 12 kV for the remaining circuits without arcing.
Additional information is available on request.

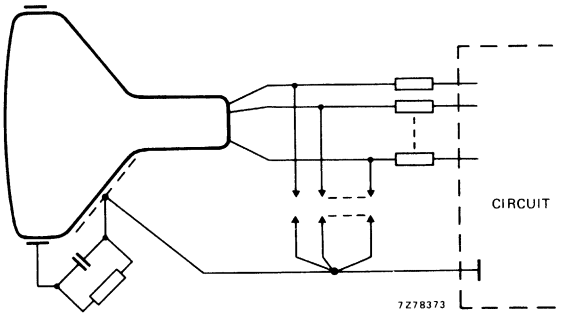

BEAM CORRECTIONS

Maximum required correction for register, as measured at the centre of the screen in any direction	0,08 mm
Centre convergence displacement of the blue and red beams is contained within a circle; max. diameter of circle	5 mm
Centre convergence displacement between the green beam and converged blue and red beams is contained within a circle; maximum diameter of circle	2,5 mm
Maximum centring error in any direction after colour purity, static convergence, and horizontal centre line correction, measured with deflection coils in nominal position	5 mm

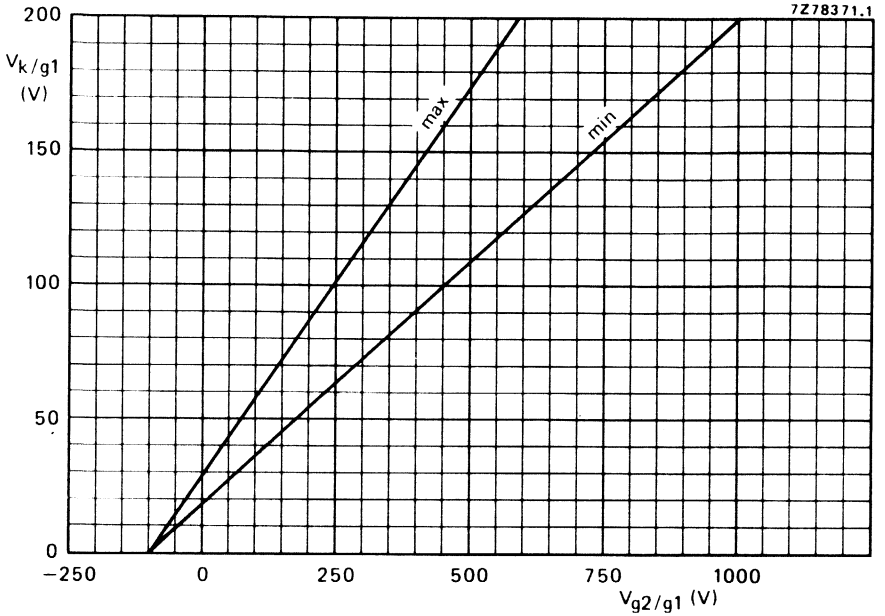

Spot cut-off design chart (cathode drive), V_{g3} adjusted for focus, $V_{a,\,g4}$ = 25 kV.

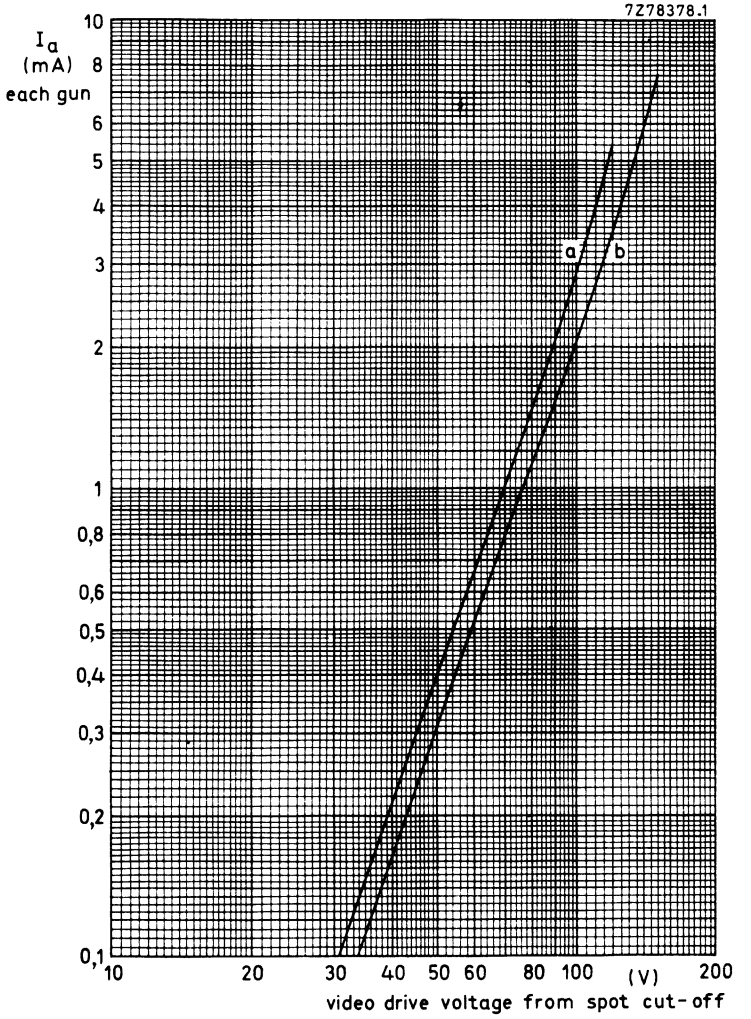

Typical cathode drive characteristics

V_f = 6,3 V;
$V_{a,g4}$ = 25 kV;
V_{g3} adjusted for focus;
V_{g2} adjusted to provide spot cut-off for desired fixed V_K.

curve a = spot cut-off = 120 V;
curve b = spot cut-off = 150 V.

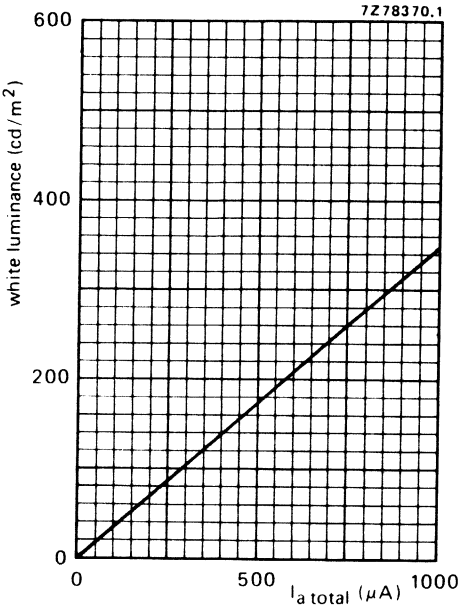

Luminance at the centre of the screen as a function of I_{total}.
$V_{a,\ g4}$ = 25 kV, V_f = 6,3 V, V_{g3} adjusted for optimum focus.
Scanned area = 404,4 mm x 303,3 mm;
CIE co-ordinates x = 0,313, y = 0,329.

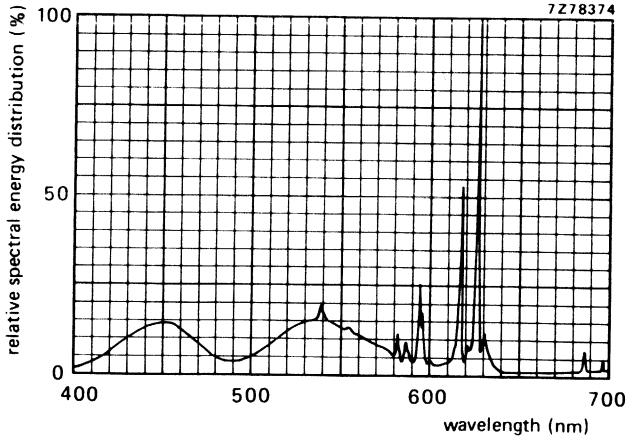

Simultaneous excitation of red, green and blue phosphor, measured in a tube, to produce white of x = 0,313, y = 0,329. Exact shape of the peaks depends on the resolution of the measuring apparatus.

Colour co-ordinates:	x	y
red	0,635	0,340
green	0,315	0,600
blue	0,150	0,060

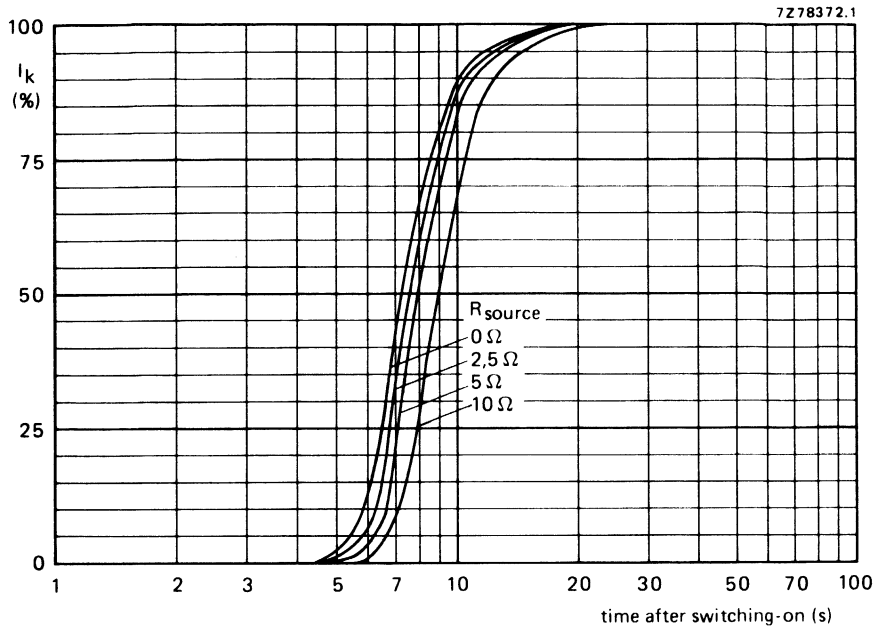

Cathode heating time after switching on , measured under typical operating conditions.

DEGAUSSING

The picture tube is provided with an internal magnetic shield. This shield and the shadow mask with its suspension system may be provided with an automatic, degaussing system, consisting of two coils covering top and bottom cone parts, or one large coil shaped in the form of a figure eight, with one half on the top and the other half on the bottom cone part.

For proper degaussing an initial magnetomotive force (m.m.f.) of 300 ampere-turns is required in each of the coils. This m.m.f. has to be gradually decreased by appropriate degaussing circuitry. In the steady state, no significant m.m.f. should remain in the coils ($\leqslant$ 0,3 ampere-turns).

If single-phase power rectification is employed in the t.v. circuitry, provision should be included to prevent asymmetric distortion of the a.c. voltage applied to the degaussing circuit due to high d.c. inrush currents.

Examples of a double-coil and of a single-coil system are given below.

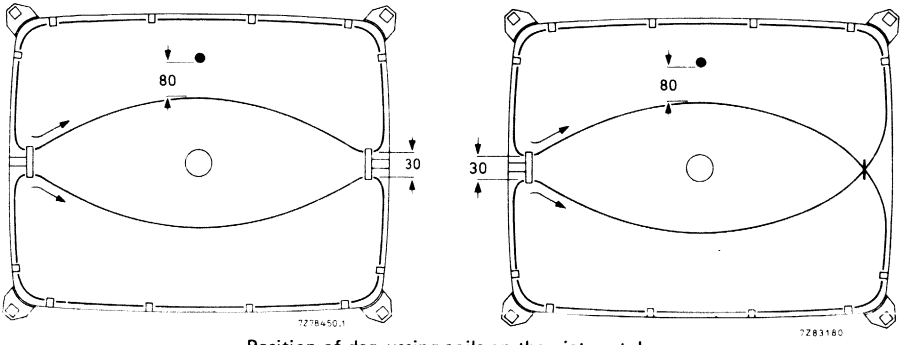

Position of degaussing coils on the picture tube.

Degaussing circuit using dual PTC thermistor.

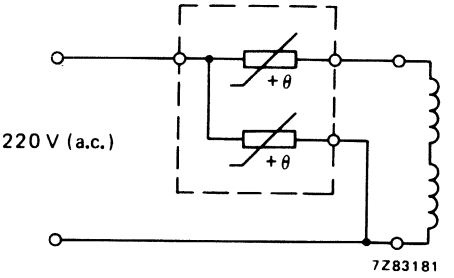

Data of each degaussing coil

	double-coil system	single-coil system
Circumference	117 cm	237 cm
Number of turns	60	60
Copper-wire diameter	0,35 mm	0,35 mm
Resistance (R_c)	12,5 Ω	25,1 Ω
Catalogue number of appropriate dual PTC thermistor	2322 662 98009	2322 662 98009

DEFLECTION UNIT

QUICK REFERENCE DATA

Picture tube	
gun arrangement	in line
diagonal	51 cm (20 in)
neck diameter	29,1 mm
Deflection angle	90°
Line deflection current, edge to edge at 25 kV	3,25 A (p-p)
Inductance of line coils, parallel connected	1,66 mH
Field deflection current, edge to edge at 25 kV	0,40 A (p-p)
Resistance of field coils, series connected	60 Ω

APPLICATION

This deflection unit, in conjunction with devices for colour purity and static convergence is for 90° in-line colour picture tube A51-570X, with a neck diameter of 29,1 mm.

DESCRIPTION

The deflection unit consists of saddle shaped line deflection coils and toroidal wound field deflection coils, thus forming a hybrid yoke. The unit has a metal non-magnetic clamping ring at the rear, to fix the deflection unit on the neck of the picture tube. With the deflection unit positioned axially for optimum purity, a clearance is available at the front which permits adjustment of convergence by tilting the unit in the vertical and/or horizontal plane. Wedges are recommended to secure the deflection unit in the chosen position.

MECHANICAL DATA

Outlines

Dimensions in mm

The deflection unit fits a tube with a neck diameter of 29,1 $^{+0,9}_{-0,7}$ mm.

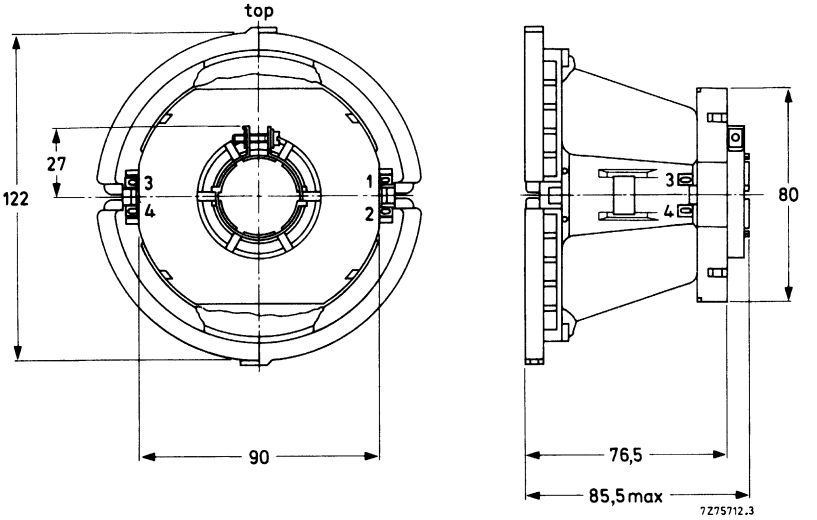

Fig. 1.

Maximum operating temperature (average copper temperature measured with resistance method)	+90 °C
Storage temperature range	−20 to +90 °C
Flame retardent	according to UL 1413, category 94-V1
Torque on neck clamp screw	1,4 Nm

ENVIRONMENTAL TEST SPECIFICATIONS

Vibration	IEC68-2-6 (test Fc)
Bump	IEC68-2-29 (test Eb; 35g)
Cold	IEC68-2-1 (test Ab)
Dry heat	IEC68-2-2 (test Bb)
Damp heat, steady state	IEC68-2-3 (test Ca)
Cyclic damp heat	IEC68-2-30 (test Db)
Change of temperature	IEC68-2-14 (test Nb)

ELECTRICAL DATA

Line coils	
Inductance at 1 V (r.m.s.), 1 kHz	1,66 mH ± 5%
Resistance at 25 °C	1,9 Ω ± 10%
Line deflection current, edge to edge, at 25 kV	3,25 A (p-p)
Field coils	
Inductance at 1 V (r.m.s.), 1 kHz	114 mH ± 10%
Resistance at 25 °C	60 Ω ± 7%
Field deflection current, edge to edge, at 25 kV	0,40 A (p-p)
Cross-talk	a voltage of 10 V, 15625 Hz applied to the line coils causes no more than 0,2 V across the field coils (damping resistors included)
Insulation resistance at 1 kV (d.c.)	
between line and field coils	> 500 MΩ
between line coil and core clamp	> 500 MΩ
between field coil and core clamp	> 10 MΩ

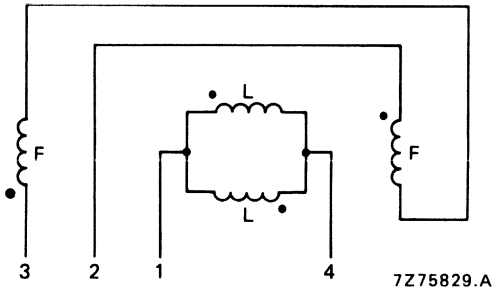

Fig. 2 Connection diagram, L = Line, F = Field.

ADJUSTMENT

- Adjust the static convergence with the four and six-pole magnets of the multipole unit AT1052 for the relative movement of the beams under influence of a four or six-pole magnet.
- Adjust colour purity by axial movement of the deflection yoke and adjustment of the two-pole magnets for centring of the beams.
- Tighten the screw of the clamping ring on the deflection yoke to secure the axial position of the unit on the picture tube.
- Readjust, if necessary, the convergence with the four and six-pole magnets.
- Tilt the unit in either horizontal or vertical direction, or in both directions so that blue, green and red lines converge at the end of the horizontal and vertical axis.
- This position of the unit has to be secured by three rubber wedges placed between the picture tube and the deflection unit. These wedges have to be cemented on to the picture tube.

Hi-Bri COLOUR PICTURE TUBE

- 90° deflection
- In-line gun, electrostatic hi-bi potential for improved focus
- 29,1 mm neck diameter
- Hi-Bri screen with pigmented phosphors featuring high brightness and increased contrast performance
- Soft-Flash technology offering improved set reliability
- Slotted shadow mask optimized for minimum moiré
- Fine pitch over entire screen
- Phosphor lines follow glass contour
- Quick-heating cathodes
- Internal magnetic shield
- Reinforced envelope for push-through mounting
- When combined with an appropriate hybrid saddle toroidal deflection unit (e.g. AT1237), it forms a self-converging assembly; dynamic convergence is not required.

QUICK REFERENCE DATA

Deflection angle	90°
Face diagonal	51 cm
Overall length	431,5 mm
Neck diameter	29,1 mm
Heating	6,3 V, 685 mA
Focusing voltage	28% of anode voltage

ELECTRON-OPTICAL DATA

Electron gun system		unitized triple-aperture electrodes
Focusing method		electrostatic
Focus lens		hi-bi potential
Deflection method		magnetic
Deflection angles		
diagonal		approx. 90°
horizontal		approx. 78°
vertical		approx. 60°

ELECTRICAL DATA

Capacitances		
anode to external conductive coating including rimband	$C_{a(m+m')}$	max. 2300 pF min. 1500 pF
grid 1 to all other electrodes	C_{g1}	17 pF
cathode of each gun to all other electrodes	C_{kR}, C_{kG}, C_{kB}	5 pF
focusing electrode to all other electrodes	C_{g3}	6 pF
Heating		indirect by a.c. or d.c.
heater voltage	V_f	6,3 V
heater current	I_f	685 mA

OPTICAL DATA

Screen	metal-backed vertical phosphor stripes; phosphor lines follow glass contour
Screen finish	satinized
Useful screen dimensions	
diagonal	min. 480,0 mm
horizontal axis	min. 404,4 mm
vertical axis	min. 303,3 mm
area	min. 1190 cm^2
Phosphors	
red	pigmented europium activated rare earth
green	sulphide type
blue	pigmented sulphide type
Centre-to-centre distance of vertical identical colour phosphor stripes, at screen centre	0,8 mm
Light transmission of face glass at centre	64%

MECHANICAL DATA (see also the figures on the following pages)

Overall length	431,4 ± 5 mm
Neck diameter	$29{,}1\ ^{+1{,}4}_{-0{,}7}$ mm*
Bulb dimensions	
diagonal	max. 515,5 mm
width	max. 442,5 mm
height	max. 343,8 mm
Base	10-pin base JEDEC B10-277
Anode contact	small cavity contact J1-21, IEC 67-III-2
Mounting position	anode contact on top
Net mass	approx. 13 kg

Handling

During shipment and handling the tube should not be subjected to accelerations greater than 35g in any direction.

* In the region of 70 mm from the neck end, the maximum diameter is 30 mm.

MECHANICAL DATA (continued)

Dimensions in mm

Notes are given after the drawings.

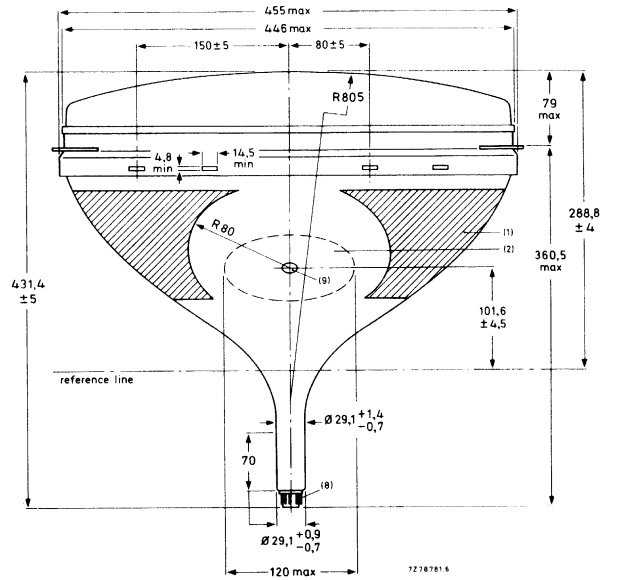

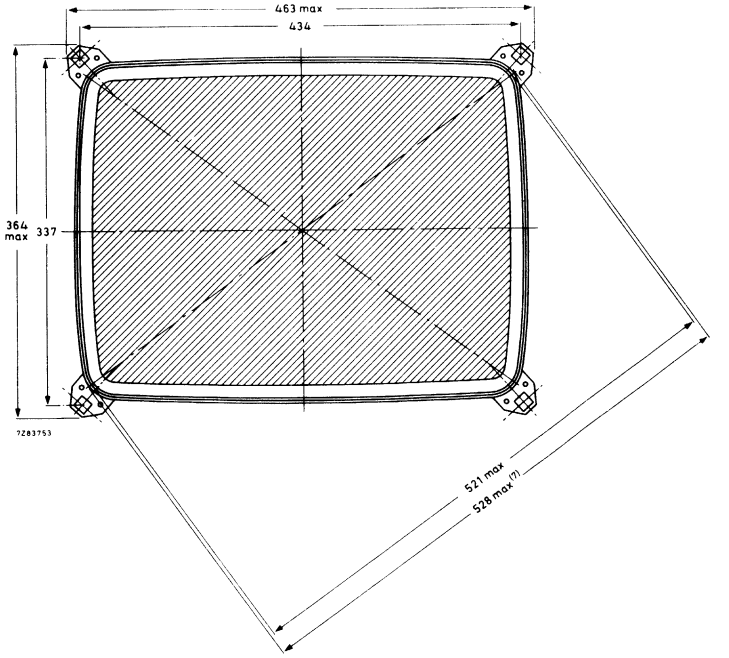

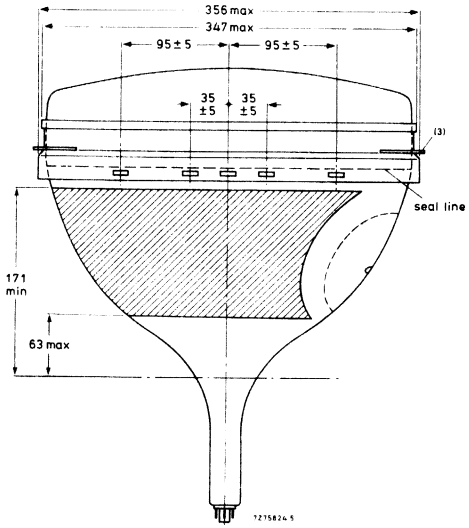

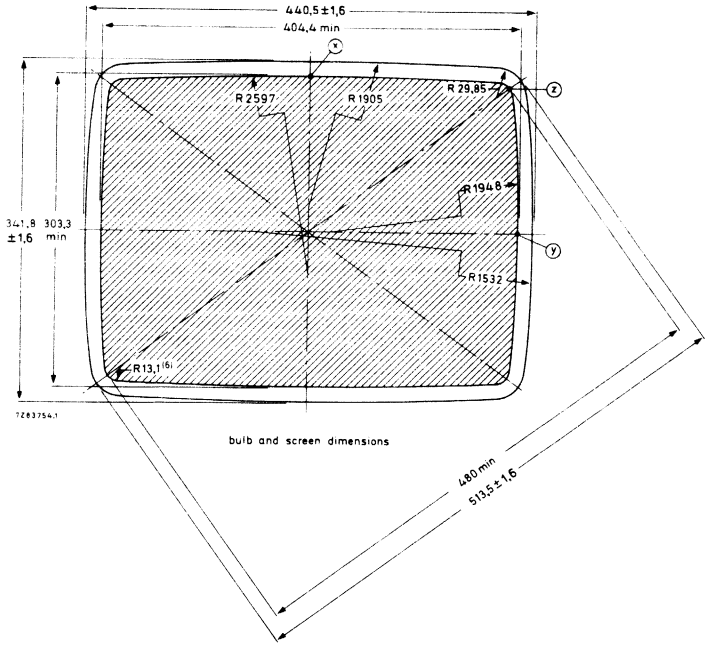

bulb and screen dimensions

MECHANICAL DATA (continued)

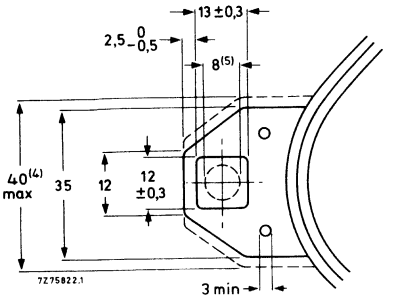

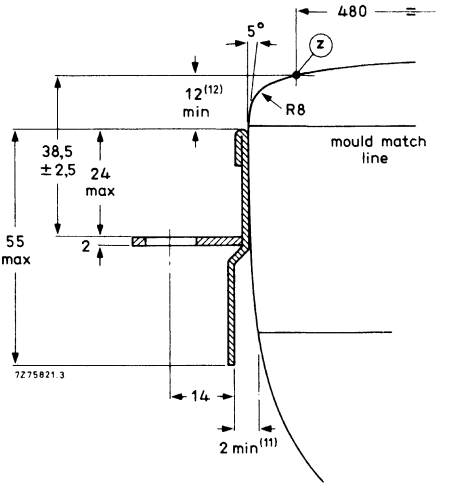

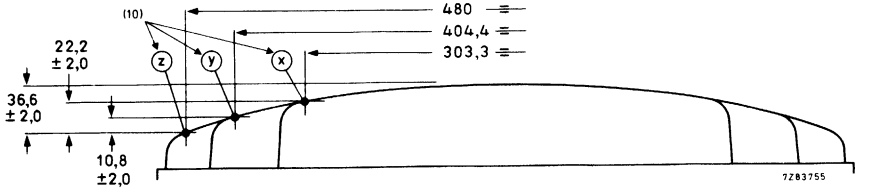

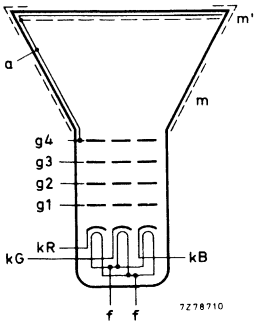

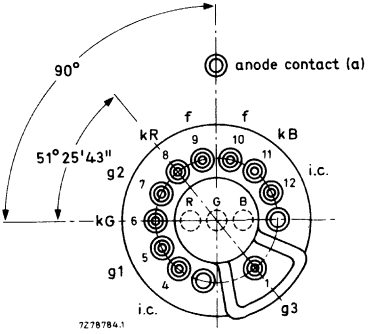

i.c. = internally connected (not to be used)

Notes to outline drawings on the preceding pages

1. Configuration of outer conductive coating may be different, but will contain the contact area as shown in the drawing.
2. To clean this area, wipe only with a soft lintless cloth.
3. The displacement of any lug with respect to the plane through the three other lugs is max. 2 mm.
4. Minimum space to be reserved for mounting lug.
5. The position of the mounting screw in the cabinet must be within a circle of 8 mm diameter drawn around the true geometrical positions, i.e. the corners of a rectangle of 434 mm x 337 mm.
6. Co-ordinates for radius R = 13,1 mm: x = 184,58 mm, y = 131,93 mm.
7. Not applicable.
8. The socket for this base should not be rigidly mounted; it should have flexible leads and be allowed to move freely. After mounting of the tube in the cabinet note that the position of the base can fall within a circle, having a diameter of max. 50 mm, concentric with an imaginary tube axis.
9. Small cavity contact J1-21, IEC 67-III-2.
10. The X, Y and Z reference points are located on the outside surface of the face plate at the intersection of the minor, major and diagonal screen axis respectively, with the minimum published screen.
11. Minimum distance between glass and rimband in plane of centre line apertures.
12. Distance from point z to any hardware.

Reference line gauge; GR90CJ4

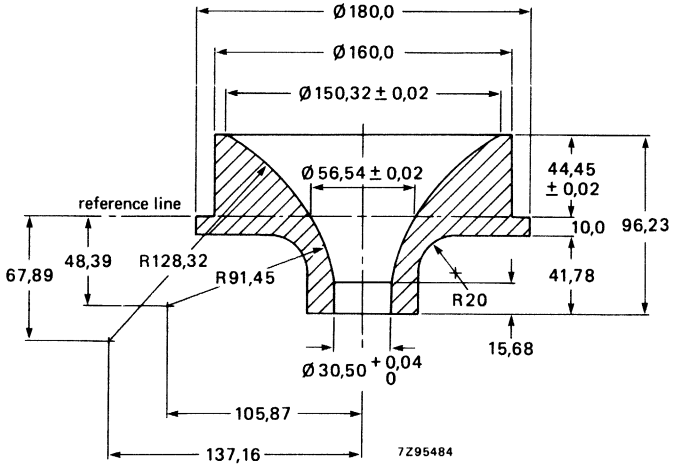

Maximum cone contour

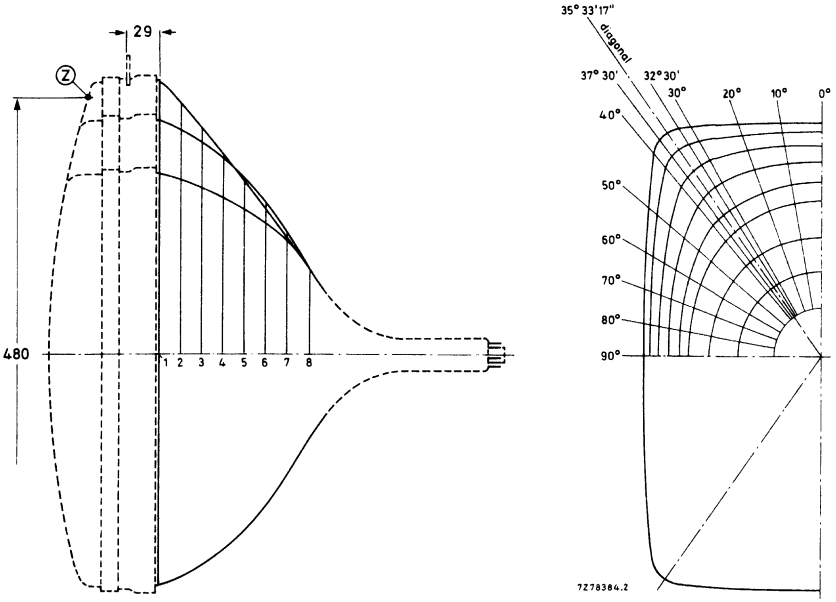

section	nom. distance from section 1	distance from centre (max. values)														
		0°	10°	20°	25°	30°	32° 30'	diag. axes	37° 30'	40°	45°	50°	60°	70°	80°	90°
1	0	218,7	221,9	231,2	238,5	247,5	252,2	255,9	254,6	247,7	230,1	215,1	193,0	179,2	171,5	169,0
2	20	209,8	212,4	220,3	226,0	232,5	235,3	236,5	235,0	230,2	216,9	204,4	184,9	172,3	165,3	163,0
3	40	197,5	199,4	204,7	208,1	211,1	211,9	211,4	210,0	207,0	198,6	189,5	173,9	163,2	157,1	155,1
4	60	182,2	183,2	185,8	187,1	187,7	187,4	186,4	185,3	183,3	178,2	172,1	160,7	152,4	147,4	145,8
5	80	163,2	163,5	163,9	163,7	163,1	162,4	161,4	160,6	159,3	156,3	152,9	145,8	140,1	136,6	135,4
6	100	146,1	146,1	145,7	145,1	144,2	143,6	142,8	142,2	141,4	139,5	137,5	133,3	129,7	127,3	126,5
7	120	112,3	112,3	111,9	111,7	111,3	111,1	110,9	110,7	110,5	110,0	109,5	108,6	107,8	107,3	107,1
8	141,7	79,8	79,8	79,8	79,8	79,8	79,8	79,8	79,8	79,8	79,8	79,8	79,8	79,8	79,8	79,8

10-pin base; JEDEC B10-277

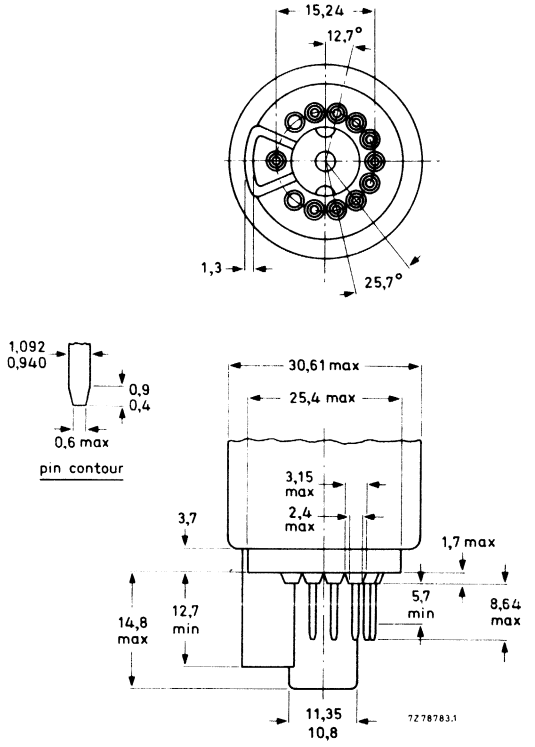

TYPICAL OPERATING CONDITIONS

The voltages are specified with respect to grid 1.

Anode voltage	$V_{a,g4}$	25 kV
Grid 3 (focusing electrode) voltage	V_{g3}	6,6 to 7,5 kV
Grid 2 voltage for a spot cut-off voltage V_k = 140 V	V_{g2}	390 to 760 V
Luminance at the centre of the screen*	L	170 cd/m²

* Tube settings adjusted to produce white D (x = 0,313, y = 0,329), focused raster, current density 0,4 μA/cm².

EQUIPMENT DESIGN VALUES

The values are valid for anode voltages between 20 and 27,5 kV.
The voltages are specified with respect to grid 1.

Grid 3 (focusing electrode) voltage	V_{g3}	26,6 to 29,8% of anode voltage
Grid 2 voltage and cathode voltage for visual extinction of focused spot	V_{g2} and V_k	see cut-off design chart*
Difference in cut-off voltages between guns in any tube	ΔV_k	lowest value > 80% of highest value
Video drive characteristics		see graphs**
Grid 3 (focusing electrode) current	I_{g3}	−5 to + 5 μA
Grid 2 current	I_{g2}	−5 to + 5 μA
Grid 1 current under cut-off conditions	I_{g1}	−5 to + 5 μA

To produce white D, CIE co-ordinates x = 0,313, y = 0,329.

Percentage of the total anode current supplied by each gun (typical)

red gun	38,3%
green gun	35,8%
blue gun	25,9%

Ratio of anode currents

red gun to green gun	min.	0,8
	average	1,1
	max.	1,4
red gun to blue gun	min.	1,1
	average	1,5
	max.	1,9
blue gun to green gun	min.	0,5
	average	0,7
	max.	0,9

* The common V_{g2} should be adjusted as follows:
Set the cathode voltage, V_k, for each gun at 150 V. Increase the V_{g2} from about 400 V to the value at which the raster of one of the guns becomes just visible. Now decrease the V_k of the remaining guns so that the rasters of these guns also become visible.

** For optimum picture performance it is recommended that the cathodes are not driven below + 10 V.

LIMITING VALUES (Design maximum rating system unless otherwise stated)

The voltages are specified with respect to grid 1.

Anode voltage	$V_{a,\ g4}$	max. min.	27,5 kV 20 kV	notes 1, 2 and 3 note 4
Long-term average current for three guns	I_a	max.	1000 μA	note 5
Grid 3 (focusing electrode) voltage	V_{g3}	max.	11 kV	
Grid 2 voltage, peak	V_{g2p}	max.	1000 V	
Cathode voltage				
positive	V_k	max.	400 V	
positive operating cut-off	V_k	max.	200 V	
negative	$-V_k$	max.	0 V	
negative peak	$-V_{kp}$	max.	2 V	
Heater voltage	V_f	6,3 V	+ 5 % −10 %	notes 1 and 6
Heater-cathode voltage				
heater negative with respect to cathode				
during equipment warm-up period not exceeding 15 s	V_{kf}	max.	450 V	note 1
after equipment warm-up period	V_{kf}	max.	250 V	
heater positive with respect to cathode	$-V_{kfp}$	peak	200 V	note 1
	$-V_{kf}$	max. (d.c. component value)	0 V	

Notes

1. Absolute maximum rating system.
2. The X-ray dose rate remains below the acceptable value of 0,5 mR/h, measured with ionization chamber when the tube is used within its limiting values.
3. During adjustment on the production line this value is likely to be surpassed considerable. It is therefore strongly recommended to first make the necessary adjustments for normal operation without picture tube.
4. Operation of the tube at lower voltages impairs the luminance and resolution.
5. The short-term average anode current should be limited by circuitry to 1500 μA.
6. For maximum cathode life and optimum performance, it is recommended that the heater supply be designed for 6,3 V at zero beam current.

FLASHOVER PROTECTION

With the high voltage used with this tube (max. 27,5 kV) internal flashovers may occur. As a result of the Soft-Flash technology these flashover currents are limited to approx. 60 A offering higher set reliability, optimum circuit protection and component savings.
Primary protective circuitry using properly grounded spark gaps and series isolation resistors (preferably carbon composition) is still necessary to prevent tube damage. The spark gaps should be connected to all picture tube electrodes at the socket according to the figure below; they are not required on the heater pins. No other connections between the outer conductive coating and the chassis are permissible.
The spark gaps should be designed for a breakdown voltage at the focusing electrode (g3) of 11,5 kV (1,5 x V_{g3} max. at $V_{a,g4}$ = 25 kV), and at the other electrodes of 1,5 to 2 kV.
The values of the series isolation resistors should be as high as possible (min. 1,5 kΩ) without causing deterioration of the circuit performance. The resistors should be able to withstand an instantaneous surge of 20 kV for the focusing circuit and 12 kV for the remaining circuits without arcing.
Additional information is available on request.

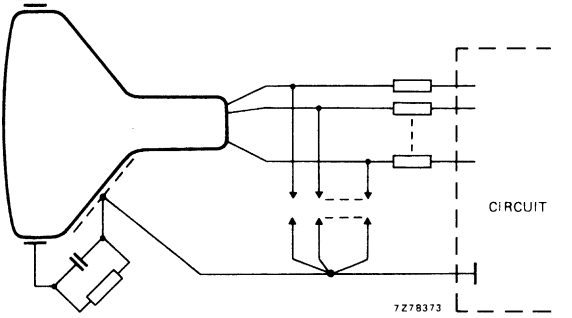

BEAM CORRECTIONS

Maximum required correction for register, as measured at the centre of the screen in any direction	0,08 mm
Centre convergence displacement of the blue and red beams is contained within a circle; max. diameter of circle	5 mm
Centre convergence displacement between the green beam and converged blue and red beams is contained within a circle; maximum diameter of circle	2,5 mm
Maximum centring error in any direction after colour purity, static convergence, and horizontal centre line correction, measured with deflection coils in nominal position	5 mm

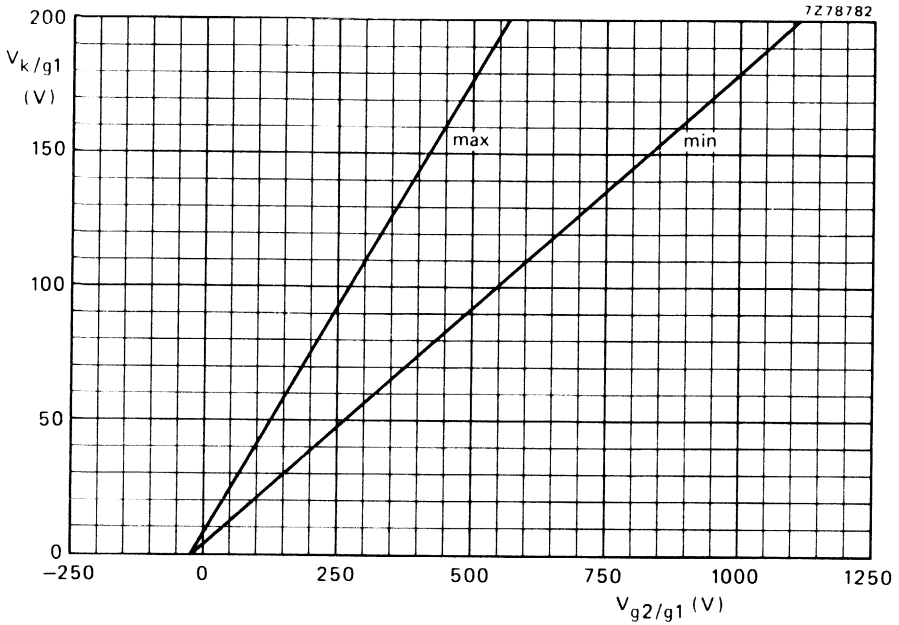

Spot cut-off design chart (cathode drive), V_{g3} adjusted for focus, $V_{a,g4}$ = 20 to 27,5 kV.

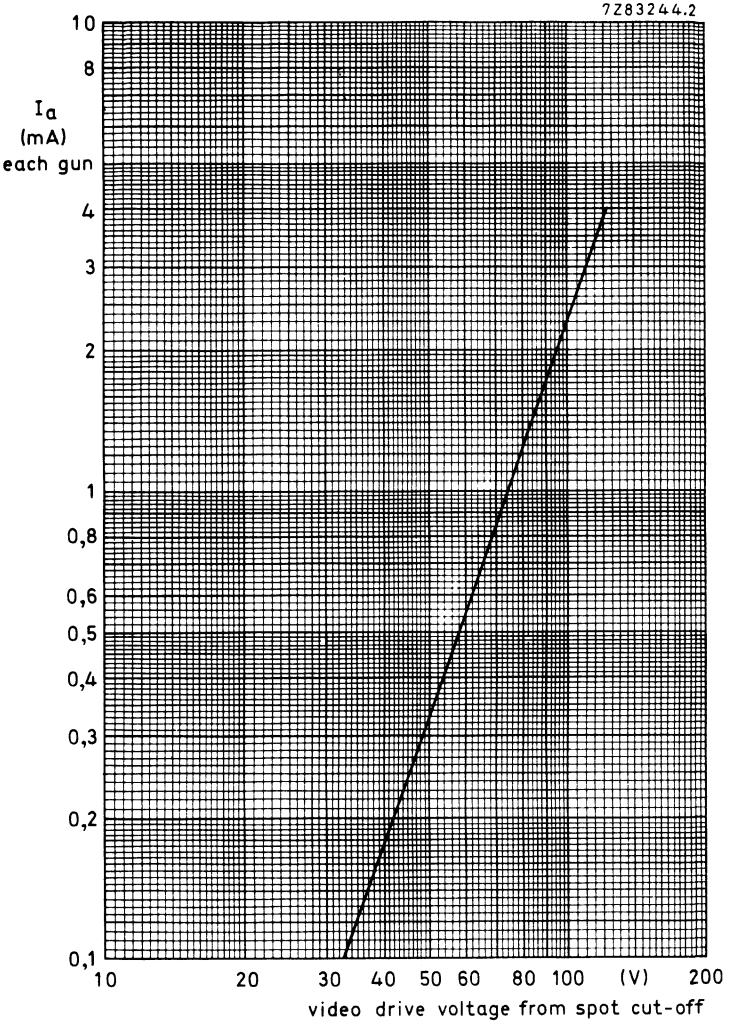

Typical cathode drive characteristics

V_f = 6,3 V
$V_{a,g4}$ = 25 kV
V_{g3} adjusted for focus
V_{g2} adjusted to provide spot cut-off for V_K = 140 V

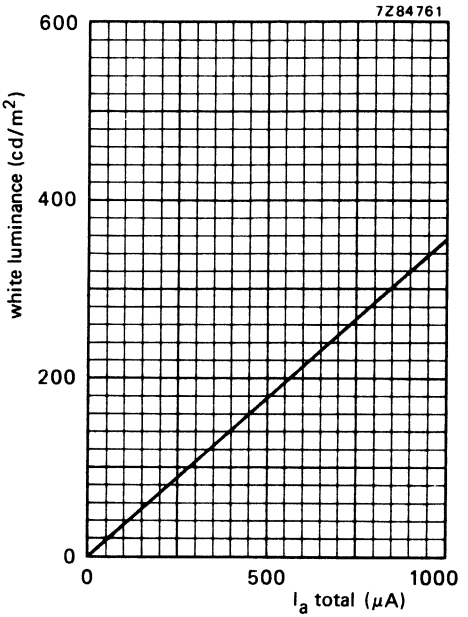

Luminance at the centre of the screen as a function of I_{total}.
$V_{a,g4}$ = 25 kV.
Scanned area = 404,4 mm x 303,3 mm;
CIE co-ordinates x = 0,313, y = 0,329.

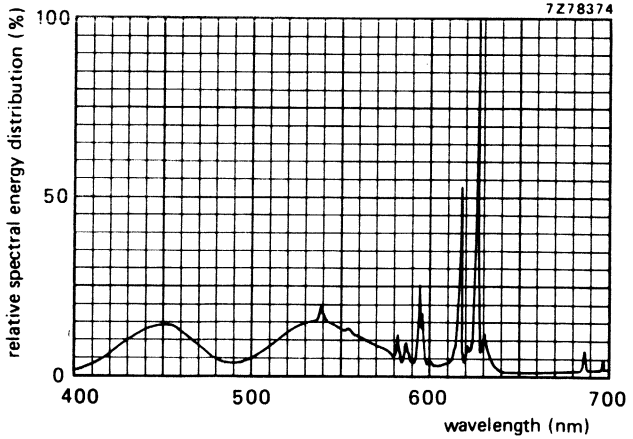

Simultaneous excitation of red, green and blue phosphor, measured in a tube, to produce white of x = 0,313, y = 0,329. Exact shape of the peaks depends on the resolution of the measuring apparatus.

Colour co-ordinates:	x	y
red	0,635	0,340
green	0,315	0,600
blue	0,150	0,060

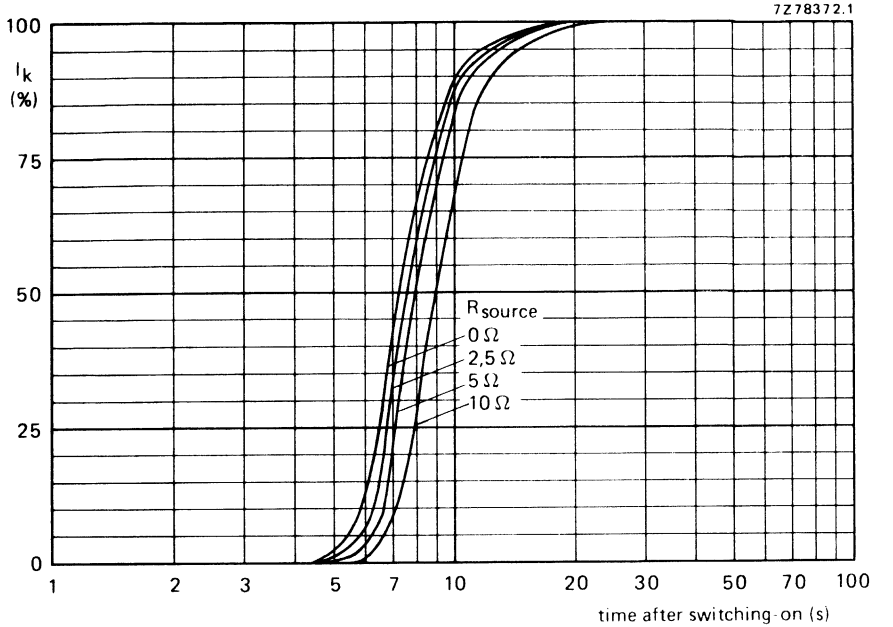

Cathode heating time after switching on, measured under typical operating conditions.

DEGAUSSING

The picture tube is provided with an internal magnetic shield. This shield and the shadow mask with its suspension system may be provided with an automatic degaussing system, consisting of two coils covering top and bottom cone parts, or one large coil shaped in the form of a figure eight, with one half on the top and the other half on the bottom cone part.
For proper degaussing an initial magnetomotive force (m.m.f.) of 300 ampere-turns is required in each of the coils. This m.m.f. has to be gradually decreased by appropriate degaussing circuitry. In the steady state, no significant m.m.f. should remain in the coils ($\leqslant$ 0,3 ampere-turns).
If single-phase power rectification is employed in the t.v. circuitry, provision should be included to prevent asymmetric distortion of the a.c. voltage applied to the degaussing circuit due to high d.c. inrush currents.

Examples of a double-coil and of a single-coil system are given below.

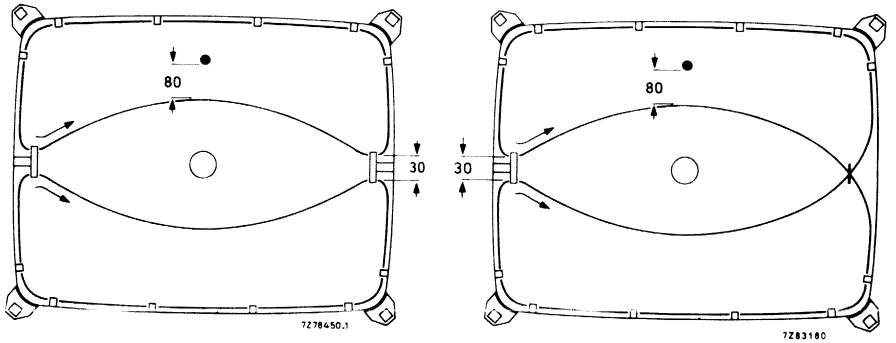

Position of degaussing coils on the picture tube.

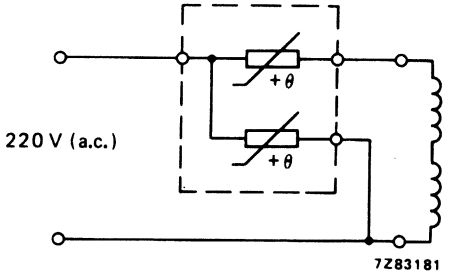

Degaussing circuit using dual PTC thermistor.

Data of each degaussing coil

	double-coil system	single-coil system
Circumference	117 cm	237 cm
Number of turns	60	60
Copper-wire diameter	0,35 mm	0,35 mm
Resistance (R_c)	12,5 Ω	25,1 Ω
Catalogue number of appropriate dual PTC thermistor	2322 662 98009	2322 662 98009

DEFLECTION UNIT

QUICK REFERENCE DATA

Picture tube, gun arrangement	in line
diagonal	51 cm (20 in)
neck diameter	29,1 mm
Deflection angle	90°
Line deflection current, edge to edge at 25 kV	2,75 A(p-p)
Inductance of line coils, parallel connected	2,3 mH
Field deflection current, edge to edge at 25 kV	0,86 A(p-p)
Resistance of field coils, parallel connected	12,4 Ω

APPLICATION

This deflection unit is designed for 90° in-line colour picture tube A51-580X, with a neck diameter of 29,1 mm, to operate in conjunction with devices for colour purity and static convergence.

DESCRIPTION

The deflection unit consists of saddle-shaped horizontal coils and toroidal wound vertical coils, thus forming a hybrid yoke. The unit is provided with a metal non-magnetic clamping ring at the rear, to fix the deflection unit on the neck of the picture tube. With the deflection unit positioned axially for optimum purity, a clearance is available at the front which permits adjustment of convergence by tilting the unit in the vertical and/or horizontal plane. Wedges are recommended to secure the deflection unit in the chosen position.

MECHANICAL DATA

Outlines

Dimensions in mm

The deflection unit fits a tube with a neck diameter of $29{,}1\ ^{+0{,}9}_{-0{,}7}$ mm.

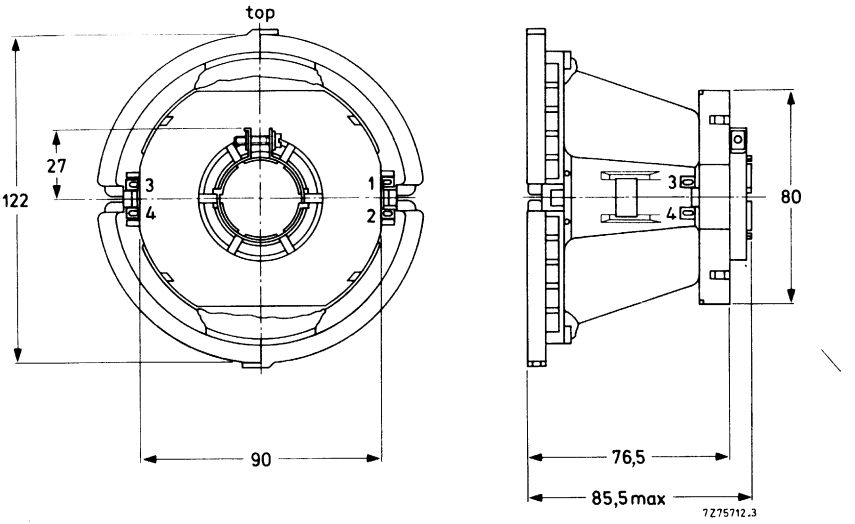

Fig. 1.

Maximum operating temperature (average copper temperature measured with resistance method)	+90 °C
Storage temperature range	−20 to +90 °C
Flame retardent	according to UL 1413, category 94-V1
Torque on neck clamp screw	1,4 Nm

ENVIRONMENTAL TEST SPECIFICATIONS

Vibration	IEC68-2-6 (test Fc)
Bump	IEC68-2-29 (test Eb; 35g)
Cold	IEC68-2-1 (test Ab)
Dry heat	IEC68-2-2 (test Bb)
Damp heat, steady state	IEC68-2-3 (test Ca)
Cyclic damp heat	IEC68-2-30 (test Db)
Change of temperature	IEC68-2-14 (test Nb)

ELECTRICAL DATA

Horizontal coils	
Inductance at 1 V (r.m.s.), 1 kHz	2,3 mH ± 5%
Resistance at 25 °C	2,25 Ω ± 10%
Vertical coils	
Inductance at 1 V (r.m.s.), 1 kHz	23,0 mH ± 10%
Resistance at 25 °C	12,4 Ω ± 7%
Typical currents with Ea = 25 kV and full scan	
Horizontal I_H	2,75 A (p-p)
Vertical I_V	0,86 A (p-p)
Cross-talk	a voltage of 10 V, 15 625 Hz applied to horizontal coils causes no more than 0,2 V across the vertical coils (damping resistors included)
Insulation resistance at 1 kV (d.c.)	
between horizontal and vertical coils	> 500 MΩ
between horizontal coil and core clamp	> 500 MΩ
between vertical coil and core clamp	> 10 MΩ

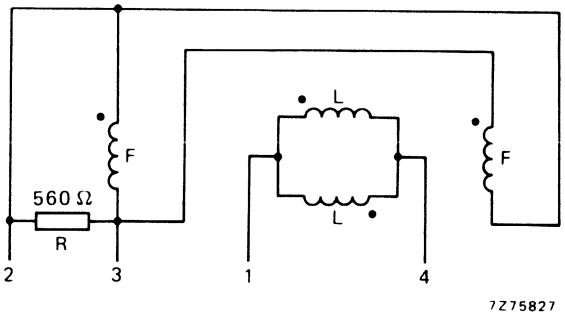

Fig. 2 Connection diagram. L = Line, F = Field.

ADJUSTMENT

- Adjust the static convergence with the four and six-pole magnets of the multipole unit AT1052 for the relative movement of the beams under influence of a four or six-pole magnet.
- Adjust colour purity by axial movement of the deflection yoke and adjustment of the two-pole magnets for centring of the beams.
- Tighten the screw of the clamping ring on the deflection yoke to secure the axial position of the unit on the picture tube.
- Readjust, if necessary, the convergence with the four and six-pole magnets.
- Tilt the unit in either horizontal or vertical direction, or in both directions so that blue, green and red lines converge at the end of the horizontal and vertical axis.
- This position of the unit has to be secured by three rubber wedges placed between the picture tube and the deflection unit. These wedges have to be cemented on to the picture tube.

DEFLECTION UNIT

QUICK REFERENCE DATA

Picture tube, gun arrangement	in line
diagonal	51 cm (20 in)
neck diameter	29,1 mm
Deflection angle	90°
Line deflection current, edge to edge at 25 kV	3,25 A(p-p)
Inductance of line coils, parallel connected	1,63 mH
Field deflection current, edge to edge at 25 kV	0,80 A(p-p)
Resistance of field coils, parallel connected	15 Ω

APPLICATION

This deflection unit is designed for 90° in-line colour picture tube A51-580X, with a neck diameter of 29,1 mm, to operate in conjunction with devices for colour purity and static convergence.

DESCRIPTION

The deflection unit consists of saddle-shaped horizontal coils and toroidal wound vertical coils, thus forming a hybrid yoke. The unit is provided with a metal non-magnetic clamping ring at the rear, to fix the deflection unit on the neck of the picture tube. With the deflection unit positioned axially for optimum purity, a clearance is available at the front which permits adjustment of convergence by tilting the unit in the vertical and/or horizontal plane. Wedges are recommended to secure the deflection unit in the chosen position.

MECHANICAL DATA

Outlines

Dimensions in mm

The deflection unit fits a tube with a neck diameter of $29{,}1\ ^{+0{,}9}_{-0{,}7}$ mm.

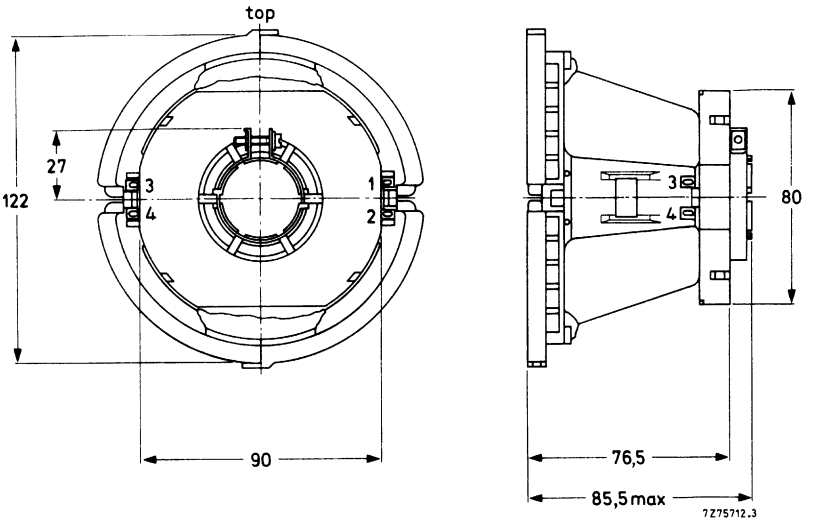

Fig. 1.

Maximum operating temperature (average copper temperature measured with resistance method)	+90 °C
Storage temperature range	−20 to +90 °C
Flame retardent	according to UL 1413, category 94-V1
Torque on neck clamp screw	1,4 Nm

ENVIRONMENTAL TEST SPECIFICATIONS

Vibration	IEC68-2-6 (test Fc)
Bump	IEC68-2-29 (test Eb; 35g)
Cold	IEC68-2-1 (test Ab)
Dry heat	IEC68-2-2 (test Bb)
Damp heat, steady state	IEC68-2-3 (test Ca)
Cyclic damp heat	IEC68-2-30 (test Db)
Change of temperature	IEC68-2-14 (test Nb)

ELECTRICAL DATA

Horizontal coils	
Inductance at 1 V (r.m.s.), 1 kHz	1,63 mH ± 5%
Resistance at 25 °C	1,9 Ω ± 10%
Vertical coils	
Inductance at 1 V (r.m.s.), 1 kHz	28,5 mH ± 10%
Resistance at 25 °C	15 Ω ± 7%
Typical currents with Ea = 25 kV and full scan	
Horizontal I_H	3,25 A (p-p)
Vertical I_V	0,80 A (p-p)
Cross-talk	a voltage of 10 V, 15 625 Hz applied to horizontal coils causes no more than 0,2 V across the vertical coils (damping resistors included)
Insulation resistance at 1 kV (d.c.)	
between horizontal and vertical coils	> 500 MΩ
between horizontal coil and core clamp	> 500 MΩ
between vertical coil and core clamp	> 10 MΩ

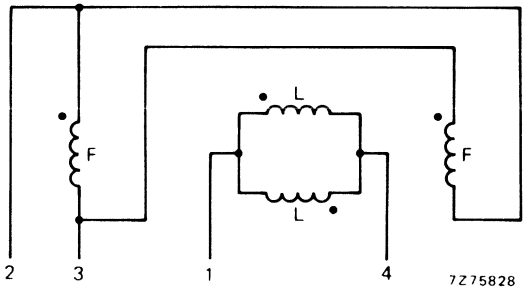

Fig. 2 Connection diagram, L = Line, F = Field.

ADJUSTMENT

- Adjust the static convergence with the four and six-pole magnets of the multipole unit AT1052 for the relative movement of the beams under influence of a four or six-pole magnet.
- Adjust colour purity by axial movement of the deflection yoke and adjustment of the two-pole magnets for centring of the beams.
- Tighten the screw of the clamping ring on the deflection yoke to secure the axial position of the unit on the picture tube.
- Readjust, if necessary, the convergence with the four and six-pole magnets.
- Tilt the unit in either horizontal or vertical direction, or in both directions so that blue, green and red lines converge at the end of the horizontal and vertical axis.
- This position of the unit has to be secured by three rubber wedges placed between the picture tube and the deflection unit. These wedges has to be cemented on to the picture tube.

DEFLECTION UNIT

QUICK REFERENCE DATA

Picture tube	
gun arrangement	in line
diagonal	51 cm (20 in)
neck diameter	29,1 mm
Deflection angle	90°
Line deflection current, edge to edge at 25 kV	2,75 A (p-p)
Inductance of line coils, parallel connected	2,3 mH
Field deflection current, edge to edge at 25 kV	0,9 A (p-p)
Resistance of field coils, series connected	12,4 Ω

APPLICATION

This deflection unit, in conjunction with devices for colour purity and static convergence is for 90° in-line colour picture tubes A51-570X and A51-580X, with a neck diameter of 29,1 mm.

DESCRIPTION

The deflection unit consists of saddle-shaped line deflection coils and toroidal wound field deflection coils, thus forming a hybrid yoke. The unit has a metal non-magnetic clamping ring at the rear, to fix the deflection unit on the neck of the picture tube. With the deflection unit positioned axially for optimum purity, a clearance is available at the front which permits adjustment of convergence by tilting the unit in the vertical and/or horizontal plane. Wedges are recommended to secure the deflection unit in the chosen position.

MECHANICAL DATA

Dimensions in mm

Outlines

The deflection unit fits a tube with a neck diameter of $29{,}1\ ^{+0{,}9}_{-0{,}7}$ mm.

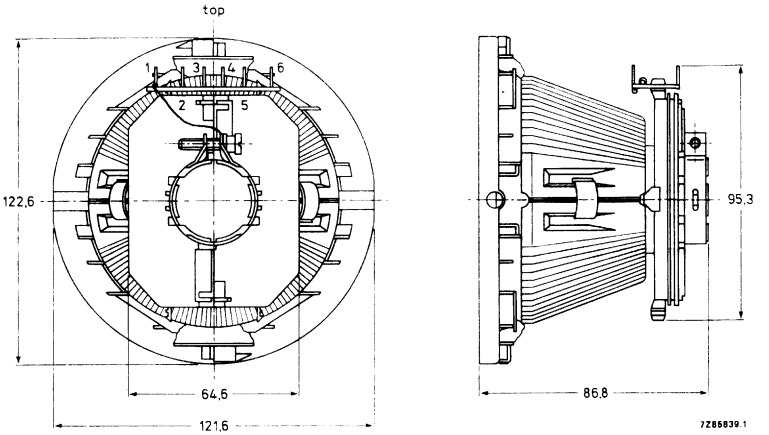

Fig. 1.

Maximum operating temperature (average copper temperature measured with resistance method)	+ 90 °C
Storage temperature range	−20 to + 90 °C
Flame retardent	according to UL 1413, category 94-V1
Torque on neck clamp screw	1,4 Nm

ENVIRONMENTAL TEST SPECIFICATIONS

Vibration	IEC 68-2-6 (test Fc)
Bump	IEC 68-2-29 (test Eb; 35g)
Cold	IEC 68-2-1 (test Ab)
Dry heat	IEC 68-2-2 (test Bb)
Damp heat, steady state	IEC 68-2-3 (test Ca)
Cyclic damp heat	IEC 68-2-30 (test Db)
Change of temperature	IEC 68-2-14 (test Nb)

ELECTRICAL DATA

Line coils	
Inductance at 1 V (r.m.s.), 1 kHz	2,3 mH ± 5%
Resistance at 25 °C	2,25 Ω ± 10%
Line deflection current, edge to edge, at 25 kV	2,75 A (p-p)
Field coils	
Inductance at 1 V (r.m.s.), 1 kHz	22,0 mH ± 10%
Resistance at 25 °C	12,4 Ω ± 7%
Field deflection current, edge to edge, at 25 kV	0,9 A (p-p)
Cross talk	a voltage of 10 V, 15625 Hz applied to the line coils causes no more than 0,2 V across the field coils (damping resistors included)
Insulation resistance at 1 kV (d.c.)	
between line and field coils	> 500 MΩ
between line coil and core clamp	> 500 MΩ
between field coil and core clamp	> 10 MΩ

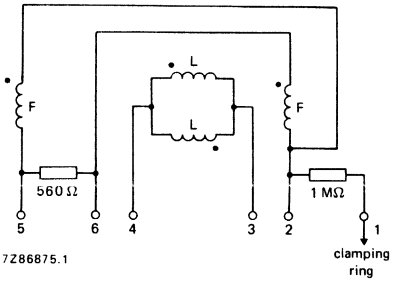

Fig. 2 Connection diagram. L = Line, F = Field.

ADJUSTMENT

- Adjust the static convergence with the four and six-pole magnets of the multipole unit AT1052 for the relative movement of the beams under influence of a four or six-pole magnet.
- Adjust colour purity by axial movement of the deflection yoke and adjustment of the two-pole magnets for centring of the beams.
- Tighten the screw of the clamping ring on the deflection yoke to secure the axial position of the unit on the picture tube.
- Readjust, if necessary, the convergence with the four and six-pole magnets.
- Tilt the unit in either horizontal or vertical direction, or in both directions so that blue, green and red lines converge at the end of the horizontal and vertical axis.
- This position of the unit has to be secured by three rubber wedges placed between the picture tube and the deflection unit. These wedges have to be cemented on to the picture tube.

DEFLECTION UNIT

QUICK REFERENCE DATA

Picture tube	
gun arrangement	in line
diagonal	51 cm (20 in)
neck diameter	29,1 mm
Deflection angle	90°
Line deflection current, edge to edge at 25 kV	3,15 A (p-p)
Inductance of line coils, parallel connected	1,76 mH
Field deflection current, edge to edge at 25 kV	0,88 A (p-p)
Resistance of field coils, series connected	12,4 Ω

APPLICATION

This deflection unit, in conjunction with devices for colour purity and static convergence is for 90° in-line colour picture tubes A51-570X and A51-580X, with a neck diameter of 29,1 mm.

DESCRIPTION

The deflection unit consists of saddle-shaped line deflection coils and toroidal wound field deflection coils, thus forming a hybrid yoke. The unit has a metal non-magnetic clamping ring at the rear, to fix the deflection unit on the neck of the picture tube. With the deflection unit positioned axially for optimum purity, a clearance is available at the front which permits adjustment of convergence by tilting the unit in the vertical and/or horizontal plane. Wedges are recommended to secure the deflection unit in the chosen position.

MECHANICAL DATA

Dimensions in mm

Outlines

The deflection unit fits a tube with a neck diameter of $29{,}1\ ^{+0{,}9}_{-0{,}7}$ mm.

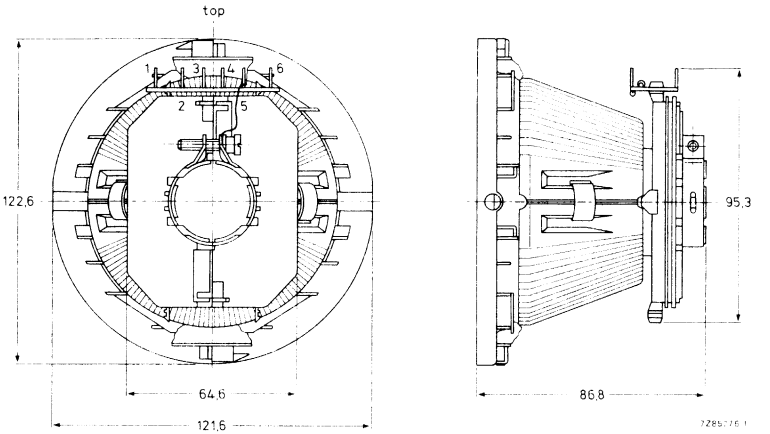

Fig. 1.

Maximum operating temperature (average copper temperature measured with resistance method)	+ 90 °C
Storage temperature range	−20 to + 90 °C
Flame retardent	according to UL 1413, category 94-V1
Torque on neck clamp screw	1,4 Nm

ENVIRONMENTAL TEST SPECIFICATIONS

Vibration	IEC 68-2-6 (test Fc)
Bump	IEC 68-2-29 (test Eb; 35g)
Cold	IEC 68-2-1 (test Ab)
Dry heat	IEC 68-2-2 (test Bb)
Damp heat, steady state	IEC 68-2-3 (test Ca)
Cyclic damp heat	IEC 68-2-30 (test Db)
Change of temperature	IEC 68-2-14 (Na)
Shock	IEC 68-2-27 (Ea)

ELECTRICAL DATA

Line coils	
Inductance at 1 V (r.m.s.), 1 kHz	1,76 mH ± 5%
Resistance at 25 °C	1,9 Ω ± 10%
Line deflection current, edge to edge, at 25 kV	3,15 A (p-p)
Field coils	
Inductance at 1 V (r.m.s.), 1 kHz	24 mH ± 10%
Resistance at 25 °C	12,4 Ω ± 7%
Field deflection current, edge to edge, at 25 kV	0,88 A (p-p)
Cross-talk	a voltage of 10 V, 15625 Hz applied to the line coils causes no more than 0,2 V across the field coils (damping resistors included)
Insulation resistance at 1 kV (d.c.)	
between line and field coils	> 500 MΩ
between line coil and core clamp	> 500 MΩ
between field coil and core clamp	> 10 MΩ

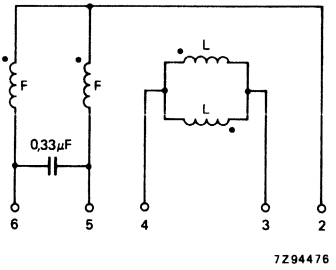

Fig. 2 Connection diagram, L = Line, F = Field.

ADJUSTMENT

- Adjust the static convergence with the four and six-pole magnets of the multipole unit AT1052 for the relative movement of the beams under influence of a four or six-pole magnet.
- Adjust colour purity by axial movement of the deflection yoke and adjustment of the two-pole magnets for centring of the beams.
- Tighten the screw of the clamping ring on the deflection yoke to secure the axial position of the unit on the picture tube.
- Readjust, if necessary, the convergence with the four and six-pole magnets.
- Tilt the unit in either horizontal or vertical direction, or in both directions so that blue, green and red lines converge at the end of the horizontal and vertical axis.
- This position of the unit has to be secured by three rubber wedges placed between the picture tube and the deflection unit. These wedges have to be cemented on to the picture tube.

DEFLECTION UNIT

QUICK REFERENCE DATA

Picture tube	
gun arrangement	in line
diagonal	51 cm (20 in)
neck diameter	29,1 mm
Deflection angle	90°
Line deflection current, edge to edge at 25 kV	3,25 A (p-p)
Inductance of line coils, parallel connected	1,66 mH
Field deflection current, edge to edge at 25 kV	0,80 A (p-p)
Resistance of field coils, parallel connected	15 Ω

APPLICATION

This deflection unit, in conjunction with devices for colour purity and static convergence is for 90° in-line colour picture tubes A51-570X and A51-580X, with a neck diameter of 29,1 mm.

DESCRIPTION

The deflection unit consists of saddle-shaped line deflection coils and toroidal wound field deflection coils, thus forming a hybrid yoke. The unit has a metal non-magnetic clamping ring at the rear, to fix the deflection unit on the neck of the picture tube. With the deflection unit positioned axially for optimum purity, a clearance is available at the front which permits adjustment of convergence by tilting the unit in the vertical and/or horizontal plane. Wedges are recommended to secure the deflection unit in the chosen position.

MECHANICAL DATA

Dimensions in mm

Outlines

The deflection unit fits a tube with a neck diameter of $29{,}1\ ^{+0{,}9}_{-0{,}7}$ mm.

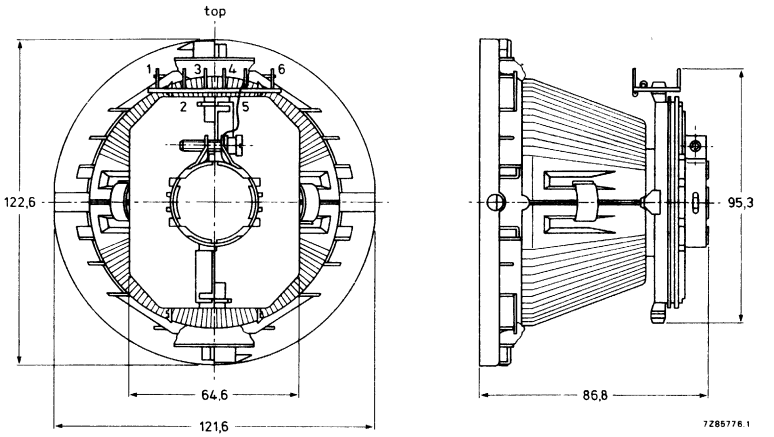

Fig. 1.

Maximum operating temperature (average copper temperature measured with resistance method)	+ 90 °C
Storage temperature range	−20 to + 90 °C
Flame retardent	according to UL 1413, category 94-V1
Torque on neck clamp screw	1,4 Nm

ENVIRONMENTAL TEST SPECIFICATIONS

Vibration	IEC 68-2-6 (test Fc)
Bump	IEC 68-2-29 (test Eb; 35g)
Cold	IEC 68-2-1 (test Ab)
Dry heat	IEC 68-2-2 (test Bb)
Damp heat, steady state	IEC 68-2-3 (test Ca)
Cyclic damp heat	IEC 68-2-30 (test Db)
Change of temperature	IEC 68-2-14 (Nb)

ELECTRICAL DATA

Line coils	
Inductance at 1 V (r.m.s.), 1 kHz	1,66 mH ± 5%
Resistance at 25 °C	1,9 Ω ± 10%
Line deflection current, edge to edge, at 25 kV	3,25 A (p-p)
Field coils	
Inductance at 1 V (r.m.s.), 1 kHz	28,5 mH ± 10%
Resistance at 25 °C	15 Ω ± 7%
Field deflection current, edge to edge, at 25 kV	0,80 A (p-p)
Cross-talk	a voltage of 10 V, 15625 Hz applied to the line coils causes no more than 0,2 V across the field coils (damping resistors included)
Insulation resistance at 1 kV (d.c.)	
between line and field coils	> 500 MΩ
between line coil and core clamp	> 500 MΩ
between field coil and core clamp	> 10 MΩ

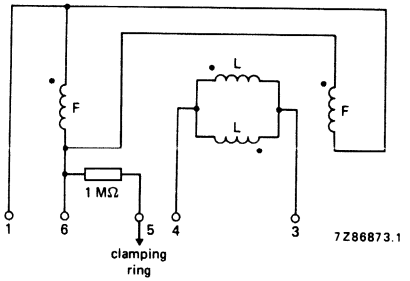

Fig. 2 Connection diagram, L = Line, F = Field.

ADJUSTMENT

- Adjust the static convergence with the four and six-pole magnets of the multipole unit AT1052 for the relative movement of the beams under influence of a four or six-pole magnet.
- Adjust colour purity by axial movement of the deflection yoke and adjustment of the two-pole magnets for centring of the beams.
- Tighten the screw of the clamping ring on the deflection yoke to secure the axial position of the unit on the picture tube.
- Readjust, if necessary, the convergence with the four and six-pole magnets.
- Tilt the unit in either horizontal or vertical direction, or in both directions so that blue, green and red lines converge at the end of the horizontal and vertical axis.
- This position of the unit has to be secured by three rubber wedges placed between the picture tube and the deflection unit. These wedges have to be cemented on to the picture tube.

DEFLECTION UNIT

QUICK REFERENCE DATA

Picture tube	
gun arrangement	in line
diagonal	51 cm (20 in)
neck diameter	29,1 mm
Deflection angle	90°
Line deflection current, edge to edge at 25 kV	3,25 A (p-p)
Inductance of line coils, parallel connected	1,66 mH
Field deflection current, edge to edge at 25 kV	0,40 A (p-p)
Resistance of field coils, series connected	60 Ω

APPLICATION

This deflection unit, in conjunction with devices for colour purity and static convergence is for 90° in-line colour picture tubes A51-570X and A51-580X, with a neck diameter of 29,1 mm.

DESCRIPTION

The deflection unit consists of saddle-shaped line deflection coils and toroidal wound field deflection coils, thus forming a hybrid yoke. The unit has a metal non-magnetic clamping ring at the rear, to fix the deflection unit on the neck of the picture tube. With the deflection unit positioned axially for optimum purity, a clearance is available at the front which permits adjustment of convergence by tilting the unit in the vertical and/or horizontal plane. Wedges are recommended to secure the deflection unit in the chosen position.

MECHANICAL DATA

Dimensions in mm

Outlines

The deflection unit fits a tube with a neck diameter of $29{,}1\ ^{+0{,}9}_{-0{,}7}$ mm.

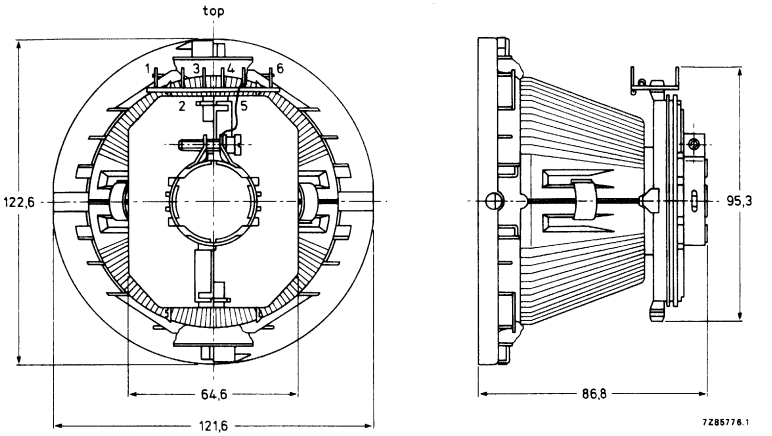

Fig. 1.

Maximum operating temperature (average copper temperature measured with resistance method)	+ 90 °C
Storage temperature range	−20 to + 90 °C
Flame retardent	according to UL 1413, category 94-V1
Torque on neck clamp screw	1,4 Nm

ENVIRONMENTAL TEST SPECIFICATIONS

Vibration	IEC 68-2-6 (test Fc)
Bump	IEC 68-2-29 (test Eb; 35g)
Cold	IEC 68-2-1 (test Ab)
Dry heat	IEC 68-2-2 (test Bb)
Damp heat, steady state	IEC 68-2-3 (test Ca)
Cyclic damp heat	IEC 68-2-30 (test Db)
Change of temperature	IEC 68-2-14 (test Nb)

ELECTRICAL DATA

Line coils	
Inductance at 1 V (r.m.s.), 1 kHz	1,66 mH ± 5%
Resistance at 25 °C	1,7 Ω ± 10%
Line deflection current, edge to edge, at 25 kV	3,25 A (p-p)
Field coils	
Inductance at 1 V (r.m.s.), 1 kHz	114 mH ± 10%
Resistance at 25 °C	60 Ω ± 7%
Field deflection current, edge to edge, at 25 kV	0,40 A (p-p)
Cross-talk	a voltage of 10 V, 15625 Hz applied to the line coils causes no more than 0,2 V across the field coils (damping resistors included)
Insulation resistance at 1 kV (d.c.)	
between line and field coils	> 500 MΩ
between line coil and core clamp	> 500 MΩ
between field coil and core clamp	> 10 MΩ

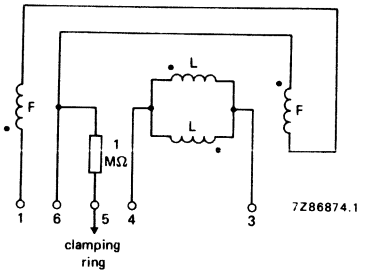

Fig. 2 Connection diagram, L = Line, F = Field.

ADJUSTMENT

- Adjust the static convergence with the four and six-pole magnets of the multipole unit AT1052 for the relative movement of the beams under influence of a four or six-pole magnet.
- Adjust colour purity by axial movement of the deflection yoke and adjustment of the two-pole magnets for centring of the beams.
- Tighten the screw of the clamping ring on the deflection yoke to secure the axial position of the unit on the picture tube.
- Readjust, if necessary, the convergence with the four and six-pole magnets.
- Tilt the unit in either horizontal or vertical direction, or in both directions so that blue, green and red lines converge at the end of the horizontal and vertical axis.
- This position of the unit has to be secured by three rubber wedges placed between the picture tube and the deflection unit. These wedges have to be cemented on to the picture tube.

Hi-Bri COLOUR PICTURE TUBE

- 90° deflection
- In-line gun, thermally stable; electrostatic hi-bi potential for improved focus
- 29,1 mm neck diameter
- Hi-Bri screen with pigmented phosphors featuring high brightness and increased contrast performance
- Soft-Flash technology offering improved set reliability
- Slotted shadow mask optimized for minimum moiré
- Fine pitch over entire screen
- Phosphor lines follow glass contour
- Quick-heating cathodes
- Internal magnetic shield
- Reinforced envelope for push-through mounting
- When combined with an appropriate hybrid saddle toroidal deflection unit (e.g. AT1236 or AT1480), it forms a self-converging and raster correction free assembly.

QUICK REFERENCE DATA

Deflection angle	90°
Face diagonal	51 cm
Overall length	431,5 mm
Neck diameter	29,1 mm
Heating	6,3 V, 685 mA
Focusing voltage	28% of anode voltage

ELECTRON-OPTICAL DATA

Electron gun system		unitized triple-aperture electrodes
Focusing method		electrostatic
Focus lens		hi-bi potential
Deflection method		magnetic
Deflection angles		
diagonal		approx. 90°
horizontal		approx. 78°
vertical		approx. 60°

ELECTRICAL DATA

Capacitances		
anode to external conductive coating including rimband	$C_{a(m+m')}$	max. 2300 pF min. 1500 pF
grid 1 to all other electrodes	C_{g1}	17 pF
cathode of each gun to all other electrodes	C_{kR}, C_{kG}, C_{kB}	5 pF
focusing electrode to all other electrodes	C_{g3}	6 pF
Heating		indirect by a.c. or d.c.
heater voltage	V_f	6,3 V
heater current	I_f	685 mA

OPTICAL DATA

Screen	metal-backed vertical phosphor stripes; phosphor lines follow glass contour
Screen finish	satinized
Useful screen dimensions	
diagonal	min. 480,0 mm
horizontal axis	min. 404,4 mm
vertical axis	min. 303,3 mm
area	min. 1190 cm^2
Phosphors	
red	pigmented europium activated rare earth
green	sulphide type
blue	pigmented sulphide type
Centre-to-centre distance of vertical identical colour phosphor stripes, at screen centre	0,8 mm
Light transmission of face glass at centre	64%

MECHANICAL DATA (see also the figures on the following pages)

Overall length	431,4 ± 5 mm
Neck diameter	$29{,}1\ ^{+1{,}4}_{-0{,}7}$ mm*
Bulb dimensions	
diagonal	max. 515,1 mm
width	max. 442,1 mm
height	max. 343,4 mm
Base	10-pin base JEDEC B10-277
Anode contact	small cavity contact J1-21, IEC 67-III-2
Mounting position	anode contact on top
Net mass	approx. 13 kg

Handling

During shipment and handling the tube should not be subjected to accelerations greater than 35g in any direction.

* In the region of 70 mm from the neck end, the maximum diameter is 30 mm.

MECHANICAL DATA (continued)

Dimensions in mm

Notes are given after the drawings.

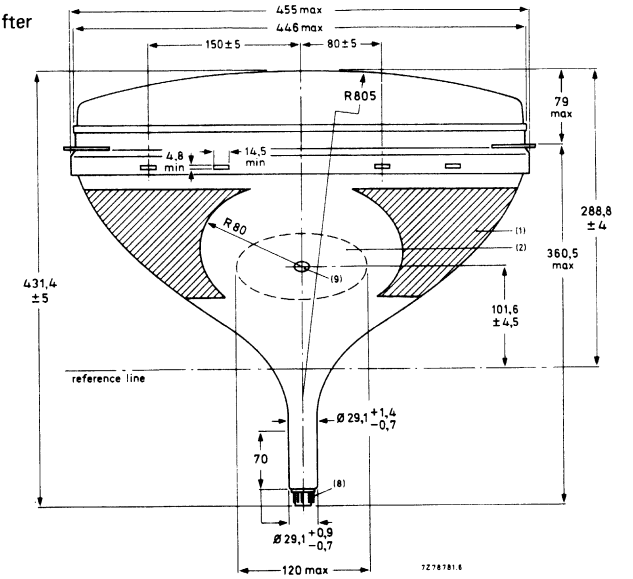

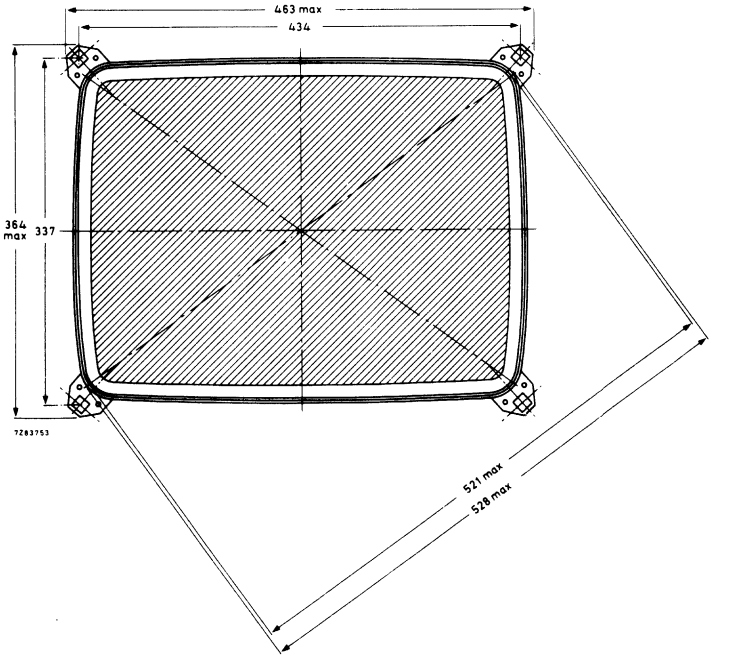

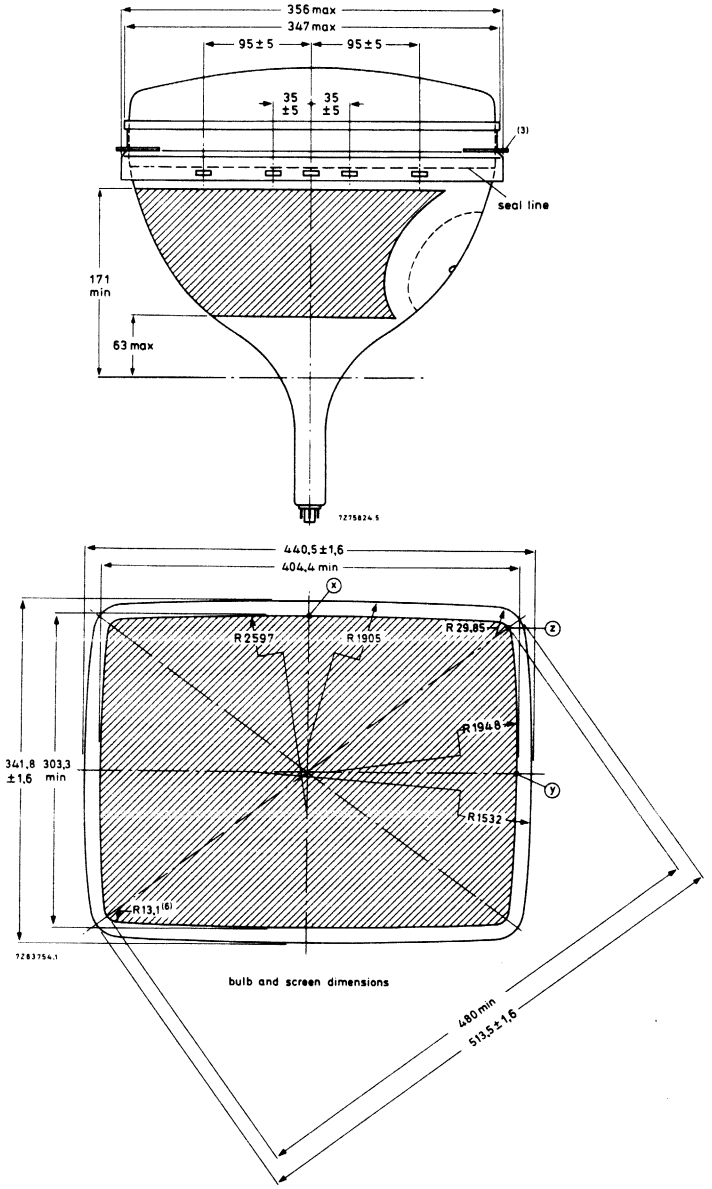

bulb and screen dimensions

MECHANICAL DATA (continued)

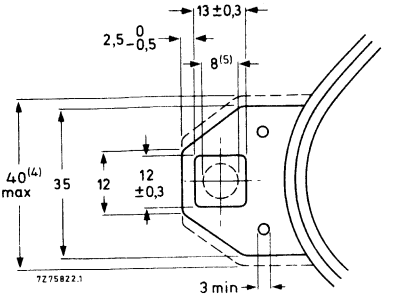

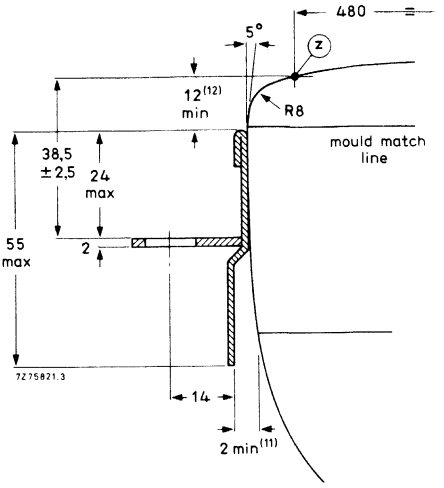

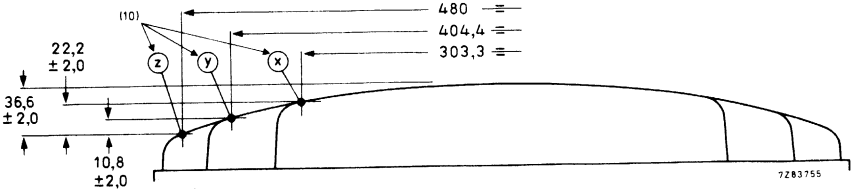

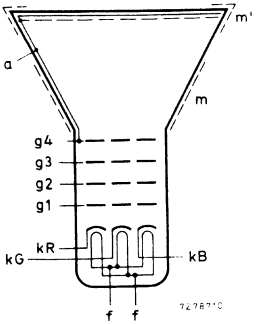

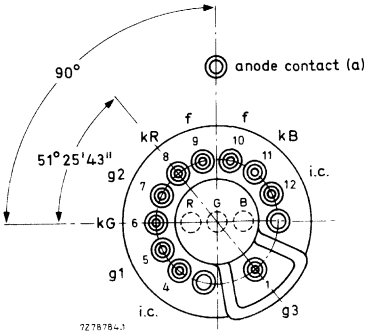

i.c. = internally connected (not to be used).

Notes to outline drawings on the preceding pages

1. Configuration of outer conductive coating may be different, but will contain the contact area as shown in the drawing.
2. To clean this area, wipe only with a soft lintless cloth.
3. The displacement of any lug with respect to the plane through the three other lugs is max. 2 mm. This deviation is incorporated in the tolerance of ± 2,5 mm.
4. Minimum space to be reserved for mounting lug.
5. The position of the mounting screw in the cabinet must be within a circle of 8 mm diameter drawn around the true geometrical positions, i.e. the corners of a rectangle of 434 mm x 337 mm.
6. Co-ordinates for radius R = 13,1 mm: x = 184,58 mm, y = 131,93 mm.
7. Not applicable.
8. The socket for this base should not be rigidly mounted; it should have flexible leads and be allowed to move freely. After mounting of the tube in the cabinet note that the position of the base can fall within a circle, having a diameter of max. 50 mm, concentric with an imaginary tube axis.
9. Small cavity contact J1-21, IEC 67-III-2.
10. The X, Y and Z reference points are located on the outside surface of the face plate at the intersection of the minor, major and diagonal screen axis respectively, with the minimum published screen.
11. Minimum distance between glass and rimband in plane of centre line apertures.
12. Distance from point z to any hardware.

Reference line gauge; GR90CJ4

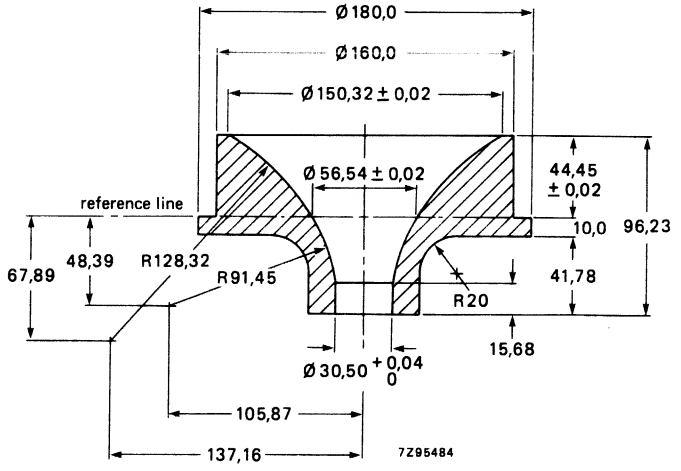

Maximum cone contour

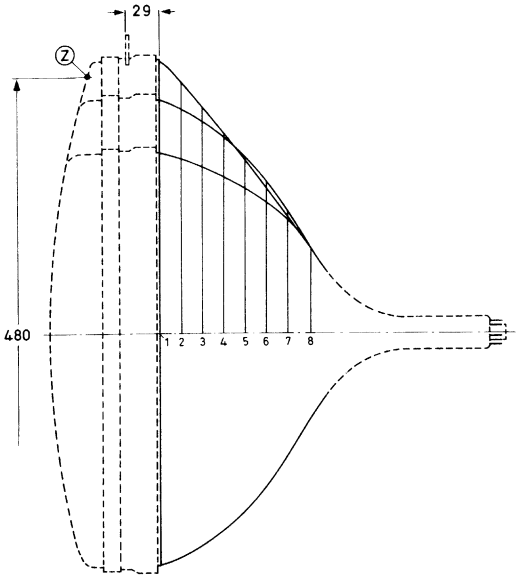

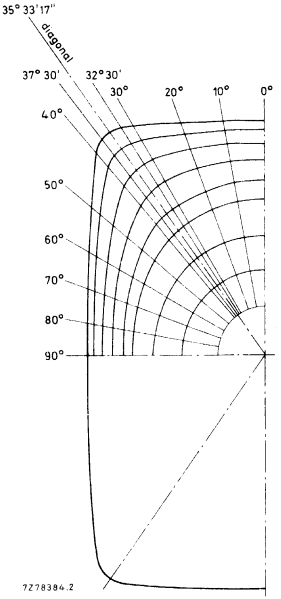

section	nom. distance from section 1	distance from centre (max. values)														
		0°	10°	20°	25°	30°	32° 30'	diag. axes	37° 30'	40°	45°	50°	60°	70°	80°	90°
1	0	218,7	221,9	231,2	238,5	247,5	252,2	255,9	254,6	247,7	230,1	215,1	193,0	179,2	171,5	169,0
2	20	209,8	212,4	220,3	226,0	232,5	235,3	236,5	235,0	230,2	216,9	204,4	184,9	172,3	165,3	163,0
3	40	197,5	199,4	204,7	208,1	211,1	211,9	211,4	210,0	207,0	198,6	189,5	173,9	163,2	157,1	155,1
4	60	182,2	183,2	185,8	187,1	187,7	187,4	186,4	185,3	183,3	178,2	172,1	160,7	152,4	147,4	145,8
5	80	163,2	163,5	163,9	163,7	163,1	162,4	161,4	160,6	159,3	156,3	152,9	145,8	140,1	136,6	135,4
6	100	146,1	146,1	145,7	145,1	144,2	143,6	142,8	142,2	141,4	139,5	137,5	133,3	129,7	127,3	126,5
7	120	112,3	112,3	111,9	111,7	111,3	111,1	110,9	110,7	110,5	110,0	109,5	108,6	107,8	107,3	107,1
8	141,7	79,8	79,8	79,8	79,8	79,8	79,8	79,8	79,8	79,8	79,8	79,8	79,8	79,8	79,8	79,8

10-pin base; JEDEC B10-277

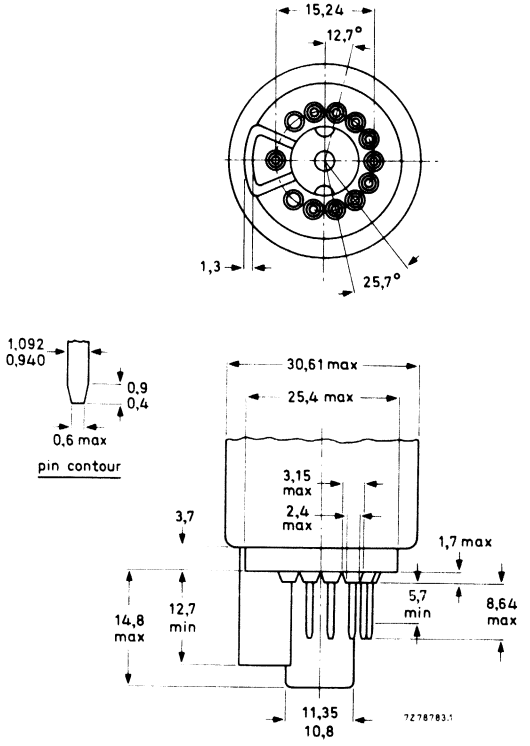

TYPICAL OPERATING CONDITIONS

The voltages are specified with respect to grid 1.

Anode voltage	$V_{a,g4}$	25 kV
Grid 3 (focusing electrode) voltage	V_{g3}	6,6 to 7,5 kV
Grid 2 voltage for a spot cut-off voltage V_k = 140 V	V_{g2}	390 to 760 V
Luminance at the centre of the screen*	L	170 cd/m²

* Tube settings adjusted to produce white D (x = 0,313, y = 0,329), focused raster, current density 0,4 μA/cm².

EQUIPMENT DESIGN VALUES

The values are valid for anode voltages between 20 and 27,5 kV.
The voltages are specified with respect to grid 1.

Grid 3 (focusing electrode) voltage	V_{g3}	26,6 to 29,8% of anode voltage
Grid 2 voltage and cathode voltage for visual extinction of focused spot	V_{g2} and V_k	see cut-off design chart*
Difference in cut-off voltages between guns in any tube	ΔV_k	lowest value > 80% of highest value
Video drive characteristics		see graphs**
Grid 3 (focusing electrode) current	I_{g3}	−5 to + 5 μA
Grid 2 current	I_{g2}	−5 to + 5 μA
Grid 1 current under cut-off conditions	I_{g1}	−5 to + 5 μA

To produce white D, CIE co-ordinates x = 0,313, y = 0,329.

Percentage of the total anode current supplied by each gun (typical)

red gun	38,3%
green gun	35,8%
blue gun	25,9%

Ratio of anode currents

red gun to green gun	min.	0,8
	average	1,1
	max.	1,4
red gun to blue gun	min.	1,1
	average	1,5
	max.	1,9
blue gun to green gun	min.	0,5
	average	0,7
	max.	0,9

* The common V_{g2} should be adjusted as follows:
Set the cathode voltage, V_k, for each gun at 150 V. Increase the V_{g2} from about 400 V to the value at which the raster of one of the guns becomes just visible. Now decrease the V_k of the remaining guns so that the rasters of these guns also become visible.

** For optimum picture performance it is recommended that the cathodes are not driven below + 10 V.

LIMITING VALUES (Design maximum rating system unless otherwise stated)

The voltages are specified with respect to grid 1.

Anode voltage	$V_{a,\,g4}$	max.	27,5 kV	notes 1, 2 and 3
		min.	20 kV	note 4
Long-term average current for three guns	I_a	max.	1000 μA	note 5
Grid 3 (focusing electrode) voltage	V_{g3}	max.	11 kV	
Grid 2 voltage, peak	V_{g2p}	max.	1000 V	
Cathode voltage				
positive	V_k	max.	400 V	
positive operating cut-off	V_k	max.	200 V	
negative	$-V_k$	max.	0 V	
negative peak	$-V_{kp}$	max.	2 V	
Heater voltage	V_f	6,3 V	+ 5 % −10 %	notes 1 and 6
Heater-cathode voltage				
heater negative with respect to cathode				
during equipment warm-up period not exceeding 15 s	V_{kf}	max.	450 V	note 1
after equipment warm-up period	V_{kf}	max.	250 V	
heater positive with respect to cathode	$-V_{kfp}$	peak	200 V	note 1
	$-V_{kf}$	max. (d.c. component value)	0 V	

Notes

1. Absolute maximum rating system.
2. The X-ray dose rate remains below the acceptable value of 0,5 mR/h, measured with ionization chamber when the tube is used within its limiting values.
3. During adjustment on the production line this value is likely to be surpassed considerable. It is therefore strongly recommended to first make the necessary adjustments for normal operation without picture tube.
4. Operation of the tube at lower voltages impairs the luminance and resolution.
5. The short-term average anode current should be limited by circuitry to 1500 μA.
6. For maximum cathode life and optimum performance, it is recommended that the heater supply be designed for 6,3 V at zero beam current.

FLASHOVER PROTECTION

With the high voltage used with this tube (max. 27,5 kV) internal flashovers may occur. As a result of the Soft-Flash technology these flashover currents are limited to approx. 60 A offering higher set reliability, optimum circuit protection and component savings.
Primary protective circuitry using properly grounded spark gaps and series isolation resistors (preferably carbon composition) is still necessary to prevent tube damage. The spark gaps should be connected to all picture tube electrodes at the socket according to the figure below; they are not required on the heater pins. No other connections between the outer conductive coating and the chassis are permissible.
The spark gaps should be designed for a breakdown voltage at the focusing electrode (g3) of 11,5 kV (1,5 x V_{g3} max. at $V_{a,g4}$ = 25 kV), and at the other electrodes of 1,5 to 2 kV.
The values of the series isolation resistors should be as high as possible (min. 1,5 kΩ) without causing deterioration of the circuit performance. The resistors should be able to withstand an instantaneous surge of 20 kV for the focusing circuit and 12 kV for the remaining circuits without arcing.
Additional information is available on request.

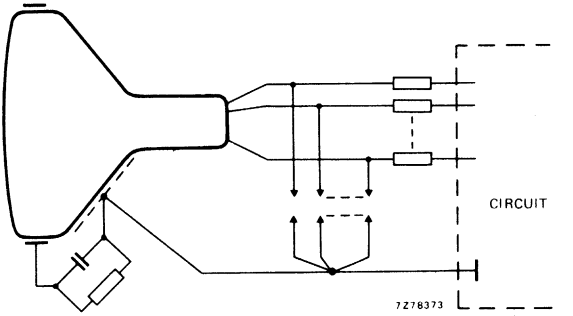

BEAM CORRECTIONS

Maximum required correction for register, as measured at the centre of the screen in any direction	0,08 mm
Centre convergence displacement of the blue and red beams is contained within a circle; max. diameter of circle	5 mm
Centre convergence displacement between the green beam and converged blue and red beams is contained within a circle; maximum diameter of circle	2,5 mm
Maximum centring error in any direction after colour purity, static convergence, and horizontal centre line correction, measured with deflection coils in nominal position	5 mm

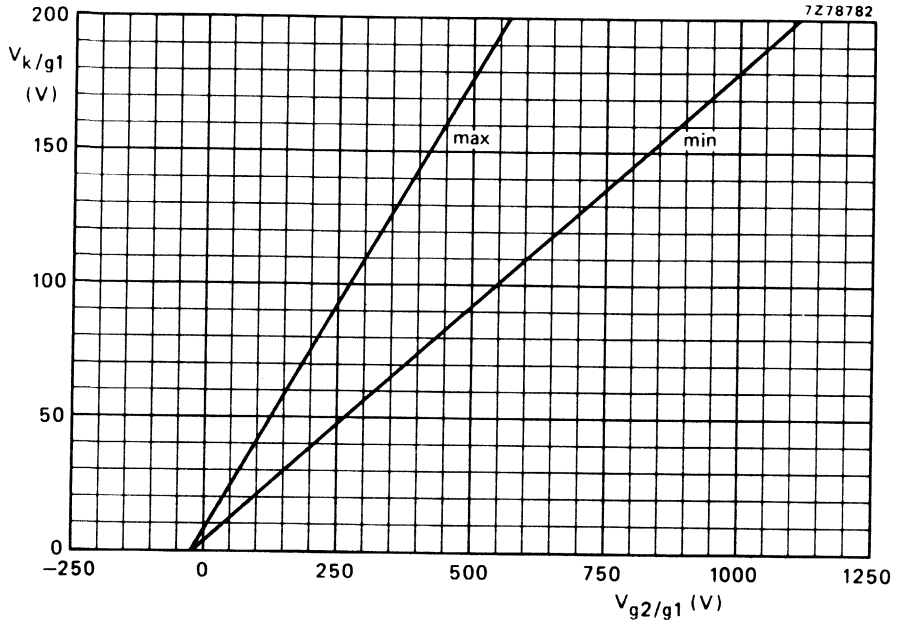

Spot cut-off design chart (cathode drive). V_{g3} adjusted for focus, $V_{a,g4}$ = 20 to 27,5 kV.

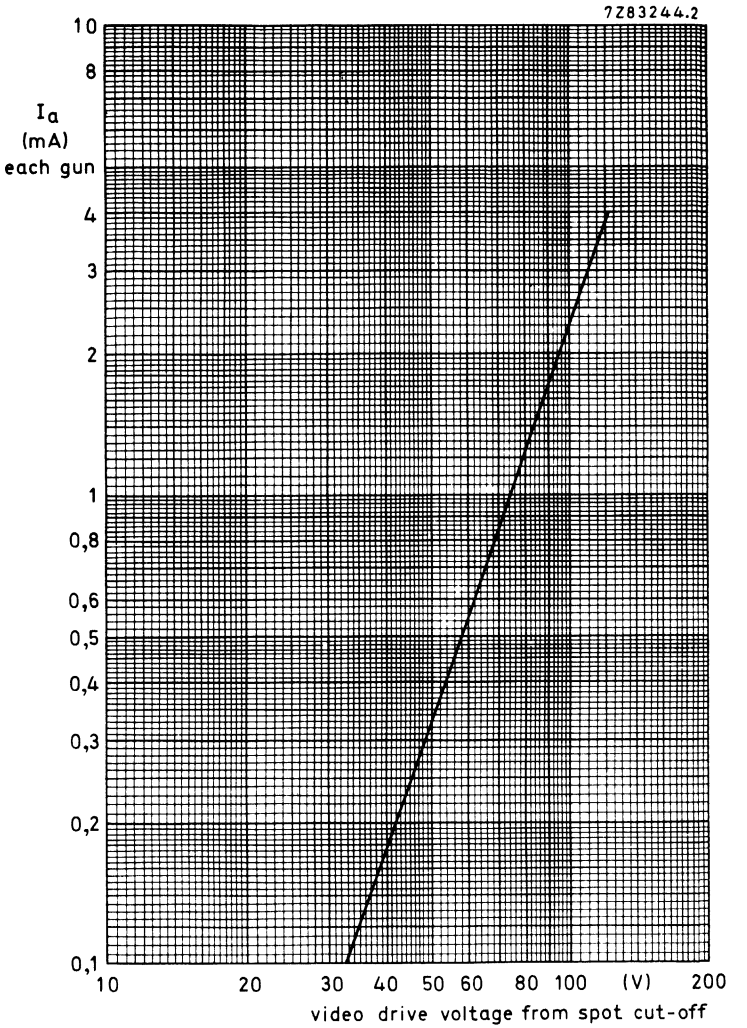

Typical cathode drive characteristics

V_f = 6,3 V
$V_{a,g4}$ = 25 kV
V_{g3} adjusted for focus
V_{g2} adjusted to provide spot cut-off for V_K = 140 V

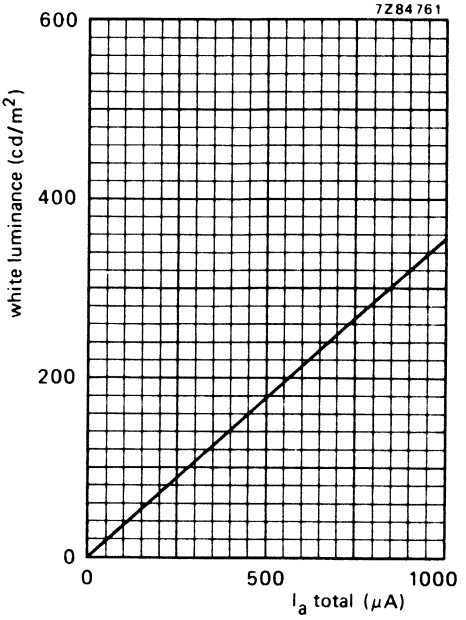

Luminance at the centre of the screen as a function of I_{total}.
$V_{a,g4}$ = 25 kV.
Scanned area = 404,4 mm x 303,3 mm;
CIE co-ordinates x = 0,313, y = 0,329.

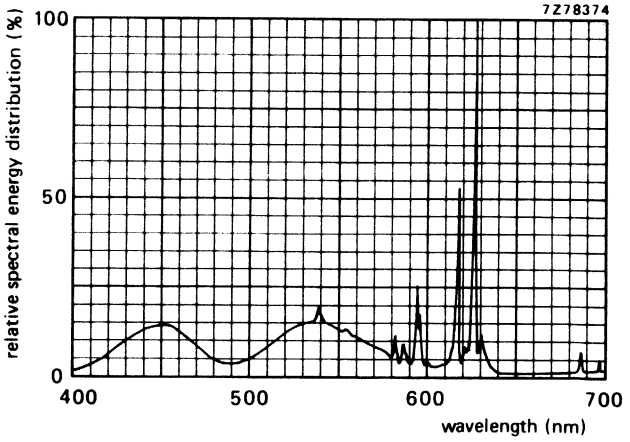

Simultaneous excitation of red, green and blue phosphor, measured in a tube, to produce white of x = 0,313, y = 0,329. Exact shape of the peaks depends on the resolution of the measuring apparatus.

Colour co-ordinates:	x	y
red	0,635	0,340
green	0,315	0,600
blue	0,150	0,060

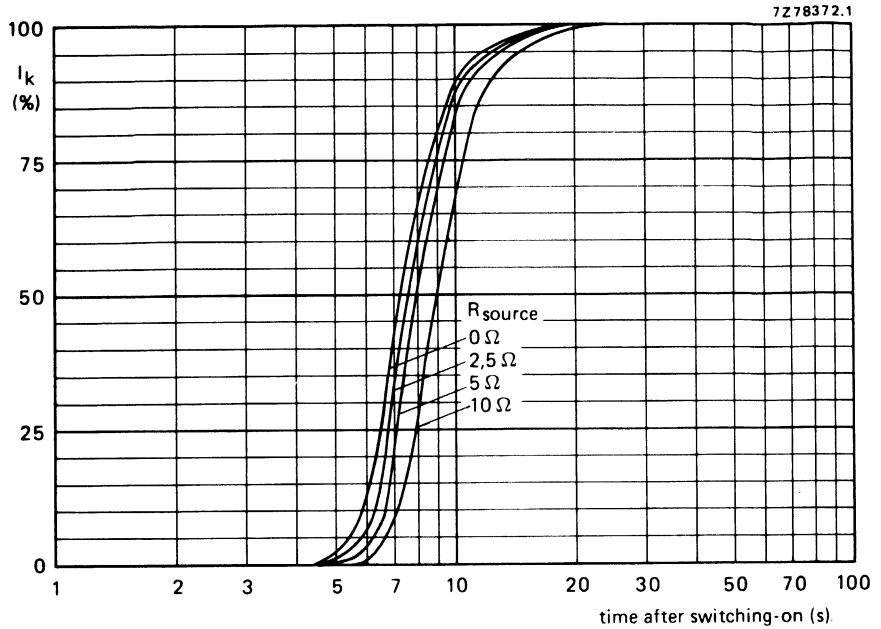

Cathode heating time after switching on, measured under typical operating conditions.

DEGAUSSING

The picture tube is provided with an internal magnetic shield. This shield and the shadow mask with its suspension system may be provided with an automatic degaussing system, consisting of two coils covering top and bottom cone parts, or one large coil shaped in the form of a figure eight, with one half on the top and the other half on the bottom cone part.
For proper degaussing an initial magnetomotive force (m.m.f.) of 300 ampere-turns is required in each of the coils. This m.m.f. has to be gradually decreased by appropriate degaussing circuitry. In the steady state, no significant m.m.f. should remain in the coils ($\leqslant$ 0,3 ampere-turns).
If single-phase power rectification is employed in the t.v. circuitry, provision should be included to prevent asymmetric distortion of the a.c. voltage applied to the degaussing circuit due to high d.c. inrush currents.

Examples of a double-coil and of a single-coil system are given below.

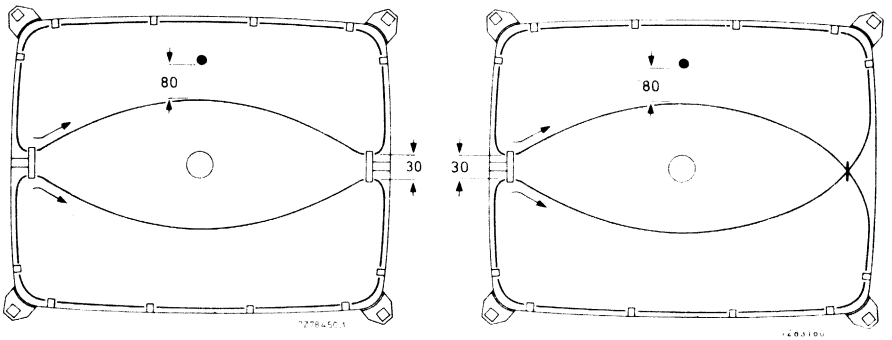

Position of degaussing coils on the picture tube.

Degaussing circuit using dual PTC thermistor.

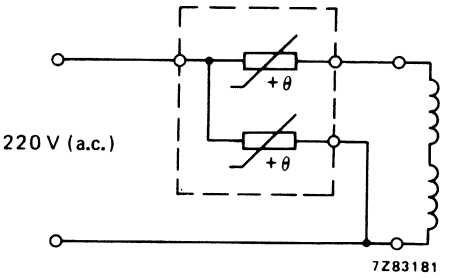

Data of each degaussing coil

	double-coil system	single-coil system
Circumference	117 cm	237 cm
Number of turns	60	60
Copper-wire diameter	0,35 mm	0,35 mm
Resistance (R_c)	12,5 Ω	25,1 Ω
Catalogue number of appropriate dual PTC thermistor	2322 662 98009	2322 662 98009

DEFLECTION UNIT

- **Raster Correction Free**

QUICK REFERENCE DATA

Picture tube	
gun arrangement	in line
diagonal	51 cm (20 in)
neck diameter	29,1 mm
Deflection angle	90°
Line deflection current, edge to edge at 25 kV	3,0 A(p-p)
Inductance of line coils, parallel connected	1,91 mH
Field deflection current, edge to edge at 25 kV	0,895 A(p-p)
Resistance of field coils, parallel connected	13,2 Ω

APPLICATION

This deflection unit, in conjunction with devices for colour purity and static convergence is for 90° in-line colour picture tube A51-590X, with a neck diameter of 29,1 mm.
The unit requires no raster correction circuitry.

DESCRIPTION

The deflection unit consists of saddle-shaped line deflection coils, toroidal wound field deflection coils, and metal fins, thus forming a raster correction free hybrid yoke. The unit has a metal non-magnetic clamping ring at the rear, to fix the deflection unit on the neck of the picture tube.

MECHANICAL DATA

Dimensions in mm

Outlines

The deflection unit fits a tube with a neck diameter of $29{,}1\ ^{+0{,}9}_{-0{,}7}$ mm.

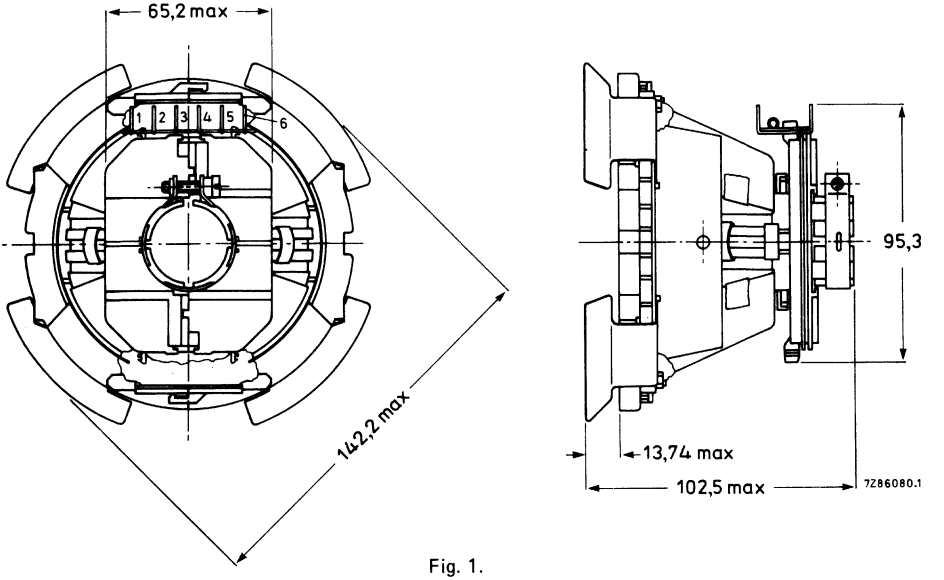

Fig. 1.

Maximum operating temperature (average copper temperature measured with resistance method)	+90 °C
Storage temperature range	−20 to +90 °C
Flame retardent	according to UL 1413, category 94-V1
Torque on neck clamp screw	1,4 Nm

ENVIRONMENTAL TEST SPECIFICATIONS

Vibration	IEC 68-2-6 (test Fc)
Bump	IEC 66-2-29 (test Eb; 35g)
Cold	IEC 68-2-1 (test Ab)
Dry heat	IEC 68-2-2 (test Bb)
Damp heat, steady state	IEC 68-2-3 (test Ca)
Cyclic damp heat	IEC 68-2-30 (test Db)
Change of temperature	IEC 68-2-14 (test Nb)

ELECTRICAL DATA

Line coils	parallel connected
Inductance at 1 V (r.m.s.), 1 kHz	1,91 mH ± 5%
Resistance at 25 °C	1,75 Ω ± 10%
Line deflection current, edge to edge, at 25 kV	3,0 A (p-p)
Voltage during line scan, edge to edge, at 25 kV, scan period 52,5 μs	109 V
Field coils	parallel connected
Inductance at 1 V (r.m.s.), 1 kHz	27,6 mH ± 10%
Resistance at 25 °C	13,2 Ω ± 7%
Field deflection current, edge to edge, at 25 kV	0,895 A(p-p)
Cross-talk	a voltage of 10 V, 15625 Hz applied to the line coils causes no more than 0,2 V across the field coils (damping resistors included)
Insulation resistance at 1 kV (d.c.)	
between line and field coils	> 500 MΩ
between line coil and core clamp	> 500 MΩ
between field coil and core clamp	> 10 MΩ

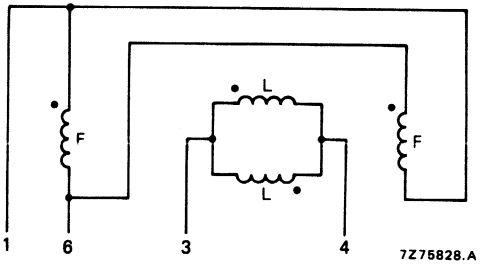

Fig. 2 Connection diagram, L = Line, F = Field.

ADJUSTMENT

- Adjust the static convergence with the four and six-pole magnets of the multipole unit AT1052 for the relative movement of the beams under influence of a four or six-pole magnet.
- Adjust colour purity by axial movement of the deflection yoke and adjustment of the two-pole magnets for centring of the beams.
- Tighten the screw of the clamping ring on the deflection yoke to secure the axial position of the unit on the picture tube.
- Readjust, if necessary, the convergence with the four and six-pole magnets.
- Tilt the unit in either horizontal or vertical direction, or in both directions so that blue, green and red lines converge at the end of the horizontal and vertical axis.
- This position of the unit has to be secured by three rubber wedges places between the picture tube and the deflection unit. These wedges have to be cemented on to the picture tube.

DEFLECTION UNIT

- **Raster Correction Free**

QUICK REFERENCE DATA

Picture tube	
gun arrangement	in line
diagonal	51 cm (20 in)
neck diameter	29,1 mm
Deflection angle	90°
Line deflection current, edge to edge at 25 kV	3,04 A (p-p)
Inductance of line coils, parallel connected (including additional coil)	2,07 mH
Field deflection current, edge to edge at 25 kV	0,895 A (p-p)
Resistance of field coils, parallel connected	13,2 Ω

APPLICATION

This deflection unit, in conjunction with devices for colour purity and static convergence is for 90° in-line colour picture tube A51-590X, with a neck diameter of 29,1 mm.
The unit requires no raster correction circuitry.

DESCRIPTION

The deflection unit consists of saddle-shaped line deflection coils, toroidal wound field deflection coils, and metal fins, thus forming a raster correction free hybrid yoke. The unit has a metal non-magnetic clamping ring at the rear, to fix the deflection unit on the neck of the picture tube.

MECHANICAL DATA

Dimensions in mm

Outlines

The deflection unit fits a tube with a neck diameter of 29,1 $^{+0,9}_{-0,7}$ mm.

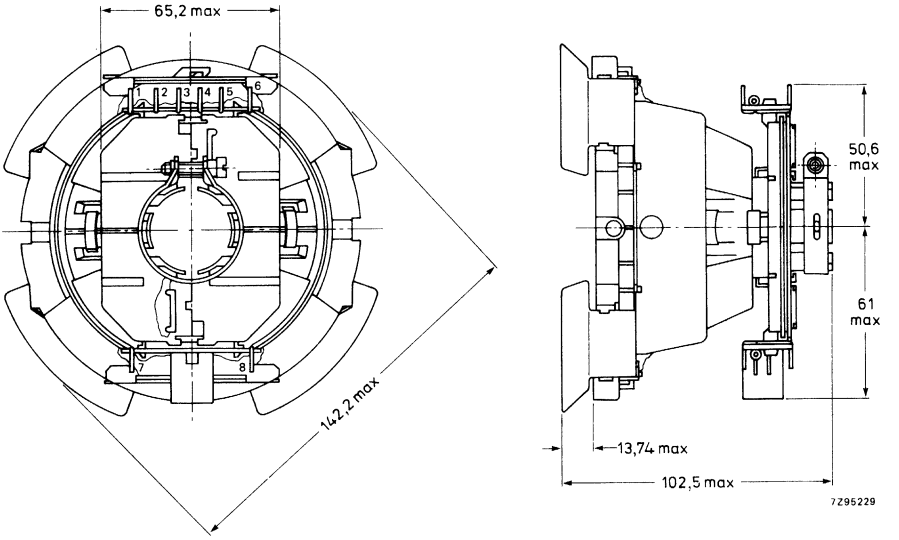

Fig. 1.

Maximum operating temperature (average copper temperature measured with resistance method)	+ 90 °C
Storage temperature range	−20 to + 90 °C
Flame retardent	according to UL 1413, category 94-V1
Torque on neck clamp screw	1,4 Nm

ENVIRONMENTAL TEST SPECIFICATIONS

Vibration	IEC 68-2-6 (test Fc)
Shock	IEC 68-2-27 (test Ea; 35g)
Bump	IEC 68-2-29 (test Eb; 25g)
Cold	IEC 68-2-1 (test Ab)
Dry heat	IEC 68-2-2 (test Bb)
Damp heat, steady state	IEC 68-2-3 (test Ca)
Cyclic damp heat	IEC 68-2-30 (test Db)
Change of temperature	IEC 68-2-14 (test Nb)

ELECTRICAL DATA

Line coils, including additional coil	parallel connected
Inductance at 1 V (r.m.s.), 1 kHz	2,07 mH ± 5%
Resistance at 25 °C	2,06 Ω ± 10%
Line deflection current, edge to edge, at 25 kV	3,04 A (p-p)
Voltage during line scan, edge to edge, at 25 kV, scan period 52,5 μs	120 V
Additional coil	
Inductance at 1 V (r.m.s.), 1 kHz	0,19 mH ± 4%
Field coils	parallel connected
Inductance at 1 V (r.m.s.), 1 kHz	27,6 mH ± 10%
Resistance at 25 °C	13,2 Ω ± 7%
Field deflection current, edge to edge, at 25 kV	0,895 A (p-p)
Cross-talk	a voltage of 10 V, 15625 Hz applied to the line coils causes no more than 0,2 V across the field coils (damping resistors included)
Insulation resistance at 1 kV (d.c.)	
between line and field coils	> 500 MΩ
between line coil and core clamp	> 500 MΩ
between field coil and core clamp	> 10 MΩ

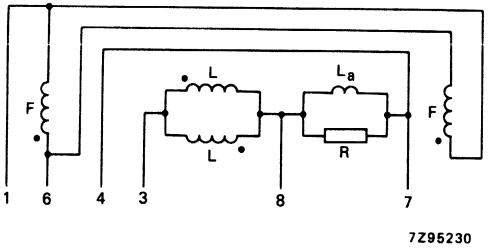

Fig. 2 Connection diagram. L = line coils; F = field coils; L_a = additional coil; R = 4,7 kΩ.

ADJUSTMENT

- Adjust the static convergence with the four and six-pole magnets of the multipole unit AT1052 for the relative movement of the beams under influence of a four or six-pole magnet.
- Adjust colour purity by axial movement of the deflection yoke and adjustment of the two-pole magnets for centring of the beams.
- Tighten the screw of the clamping ring on the deflection yoke to secure the axial position of the unit on the picture tube.
- Readjust, if necessary, the convergence with the four and six-pole magnets.
- Tilt the unit in either horizontal or vertical direction, or in both directions so that blue, green and red lines converge at the end of the horizontal and vertical axis.
- This position of the unit has to be secured by three rubber wedges places between the picture tube and the deflection unit. These wedges have to be cemented on to the picture tube.

DEFLECTION UNIT

- Raster Correction Free

QUICK REFERENCE DATA

Picture tube	
gun arrangement	in line
diagonal	51 cm (20 in)
neck diameter	29,1 mm
Deflection angle	90°
Line deflection current, edge to edge at 25 kV	3,1 A(p-p)
Inductance of line coils, parallel connected	1,9 mH
Field deflection current, edge to edge at 25 kV	0,86 A(p-p)
Resistance of field coils, parallel connected	13,6 Ω

APPLICATION

This deflection unit, in conjunction which devices for colour purity and static convergence is for 90° in-line colour picture tube A51-590X, with a neck diameter of 29,1 mm.
The unit requires no raster correction circuitry.

DESCRIPTION

The deflection unit consists of saddle-shaped line deflection coils, toroidal wound field deflection coils and metal fins, thus forming a raster correction free hybrid yoke. The unit has a metal non-magnetic clamping ring at the rear, to fix the deflection unit on the neck of the picture tube.

MECHANICAL DATA

Dimensions in mm

Outlines

The deflection unit fits a tube with a neck diameter of $29{,}1\ ^{+0{,}9}_{-0{,}7}$ mm.

For correct fitting the tube neck should be provided with adhesive tape.

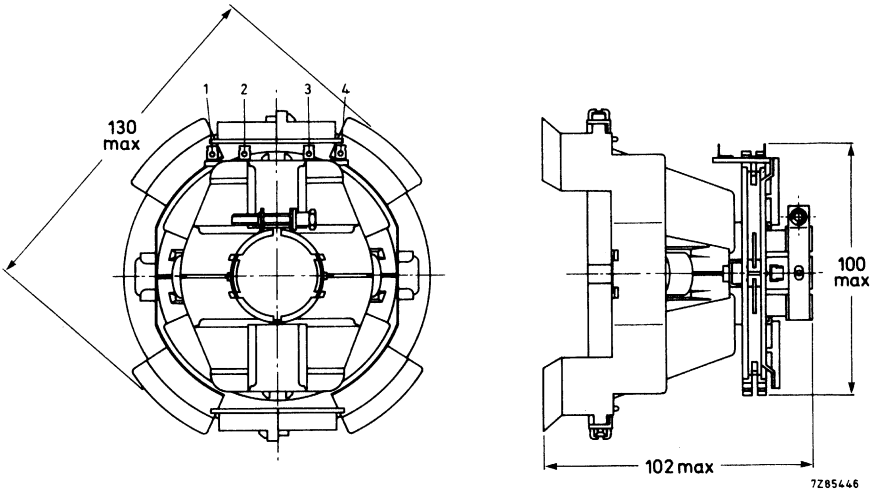

Fig. 1.

Maximum operating temperature (average copper temperature measured with resistance method)	+90 °C
Storage temperature range	−20 to +90 °C
Flame retardent	according to UL 1413, category 94-V1
Torque on neck clamp screw	1,4 Nm

ENVIRONMENTAL TEST SPECIFICATIONS

Vibration	IEC 68-2-6 (test Fc)
Bump	IEC 68-2-29 (test Eb; 35g)
Cold	IEC 68-2-1 (test Ab)
Dry heat	IEC 68-2-2 (test Bb)
Damp heat, steady state	IEC 68-2-3 (test Ca)
Cyclic damp heat	IEC 68-2-30 (test Db)
Change of temperature	IEC 68-2-14 (test Nb)

ELECTRICAL DATA

Line coils	
Inductance at 1 V (r.m.s.), 1 kHz	1,9 mH ± 5%
Resistance at 25 °C	2,2 Ω ± 10%
Line deflection current, edge to edge, at 25 kV	3,1 A(p-p)
Field coils	
Inductance at 1 V (r.m.s.), 1 kHz	29 mH ± 10%
Resistance at 25 °C	13,6 Ω ± 7%
Field deflection current, edge to edge, at 25 kV	0,86 A(p-p)
Cross-talk	a voltage of 10 V, 15 625 Hz applied to the line coils causes no more than 0,2 V across the field coils (damping resistors included)
Insulation resistance at 1 kV (d.c.)	
between line and field coils	> 500 MΩ
between line coil and core clamp	> 500 MΩ
between field coil and core clamp	> 10 MΩ

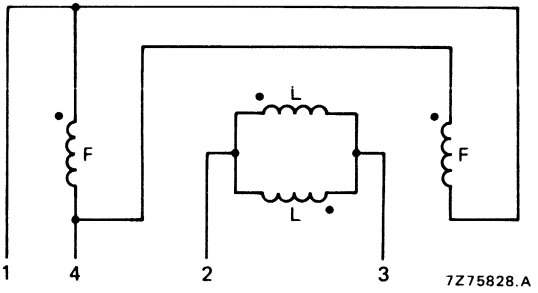

Fig. 2 Connection diagram, L = Line, F = Field.

ADJUSTMENT

- Adjust the static convergence with the four and six-pole magnets of the multipole unit AT1052 for the relative movement of the beams under influence of a four or six-pole magnet.
- Adjust colour purity by axial movement of the deflection yoke and adjustment of the two-pole magnets for centring of the beams.
- Tighten the screw of the clamping ring on the deflection yoke to secure the axial position of the unit on the picture tube.
- Readjust, if necessary, the convergence with the four and six-pole magnets.
- Tilt the unit in either horizontal or vertical direction, or in both directions so that blue, green and red lines converge at the end of the horizontal and vertical axis.
- This position of the unit has to be secured by three rubber wedges placed between the picture tube and the deflection unit. These wedges have to be cemented on to the picture tube.

Hi-Bri COLOUR PICTURE TUBE

- 90° deflection
- In-line gun, thermally stable; electrostatic hi-bi potential for improved focus
- 29,1 mm neck diameter
- Hi-Bri screen with pigmented phosphors featuring high brightness and increased contrast performance
- Soft-Flash technology offering improved set reliability
- Slotted shadow mask optimized for minimum moiré
- Fine pitch over entire screen
- Phosphor lines follow glass contour
- Quick-heating cathodes
- Internal magnetic shield
- Reinforced envelope for push-through mounting
- When combined with an appropriate hybrid saddle toroidal deflection unit (e.g. AT1236 or AT1480), it forms a self-converging and raster correction free assembly.

QUICK REFERENCE DATA

Deflection angle	90°
Face diagonal	51 cm
Overall length	436 mm
Neck diameter	29,1 mm
Heating	6,3 V, 685 mA
Focusing voltage	28% of anode voltage

ELECTRON-OPTICAL DATA

Electron gun system		unitized triple-aperture electrodes
Focusing method		electrostatic
Focus lens		hi-bi potential
Deflection method		magnetic
Deflection angles		
diagonal		approx. 90°
horizontal		approx. 78°
vertical		approx. 60°

ELECTRICAL DATA

Capacitances		
anode to external conductive coating including rimband	$C_{a(m+m')}$	max. 2300 pF min. 1500 pF
grid 1 to all other electrodes	C_{g1}	17 pF
cathode of each gun to all other electrodes	C_{kR}, C_{kG}, C_{kB}	5 pF
focusing electrode to all other electrodes	C_{g3}	6 pF
Heating		indirect by a.c. or d.c.
heater voltage	V_f	6,3 V
heater current	I_f	685 mA

OPTICAL DATA

Screen	metal-backed vertical phosphor stripes; phosphor lines follow glass contour
Screen finish	satinized
Useful screen dimensions	
diagonal	min. 480,0 mm
horizontal axis	min. 404,4 mm
vertical axis	min. 303,3 mm
area	min. 1190 cm^2
Phosphors	
red	pigmented europium activated rare earth
green	sulphide type
blue	pigmented sulphide type
Centre-to-centre distance of vertical identical colour phosphor stripes, at screen centre	0,8 mm
Light transmission of face glass at centre	64%

MECHANICAL DATA (see also the figures on the following pages)

Overall length	436 ± 5 mm
Neck diameter	$29{,}1\ ^{+1{,}4}_{-0{,}7}$ mm*
Bulb dimensions	
diagonal	max. 515,1 mm
width	max. 442,1 mm
height	max. 343,4 mm
Base	JEDEC B8-274
Anode contact	small cavity contact J1-21, IEC 67-III-2
Mounting position	anode contact on top
Net mass	approx. 13 kg

Handling

During shipment and handling the tube should not be subjected to accelerations greater than 35g in any direction.

* In the region of 70 mm from the neck end, the maximum diameter is 30 mm.

MECHANICAL DATA (continued)

Dimensions in mm

Notes are given after the drawings.

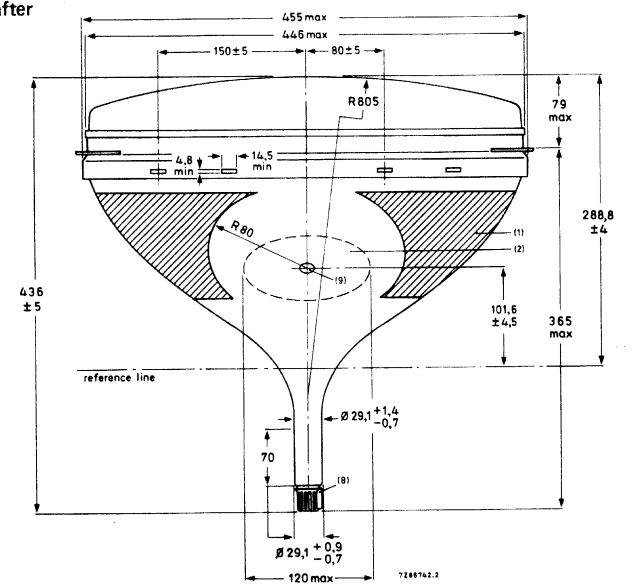

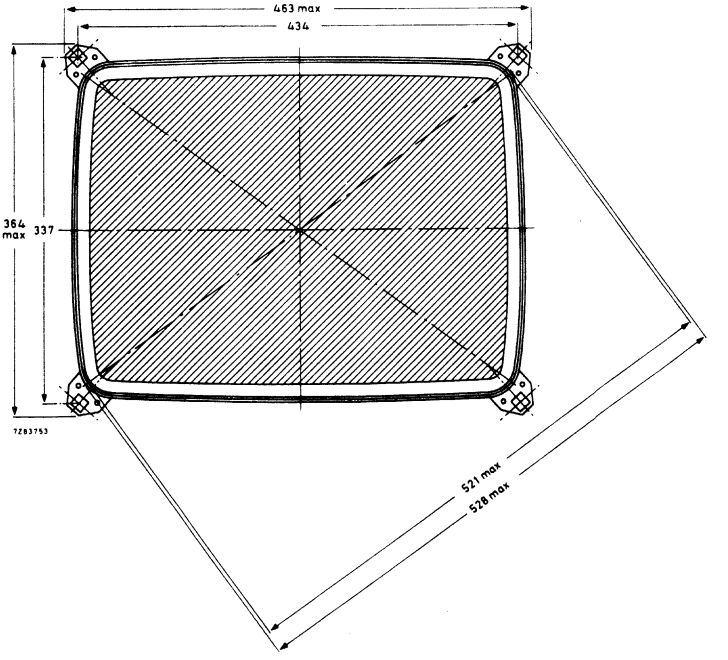

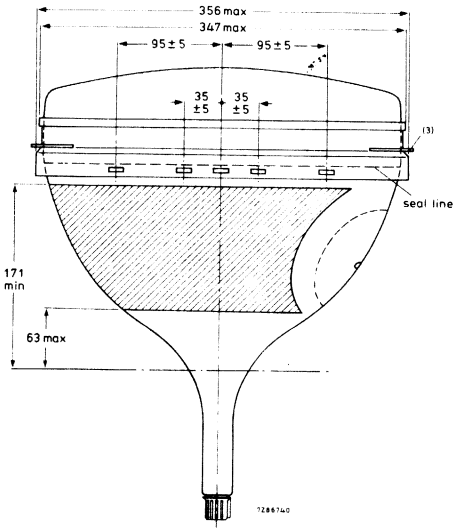

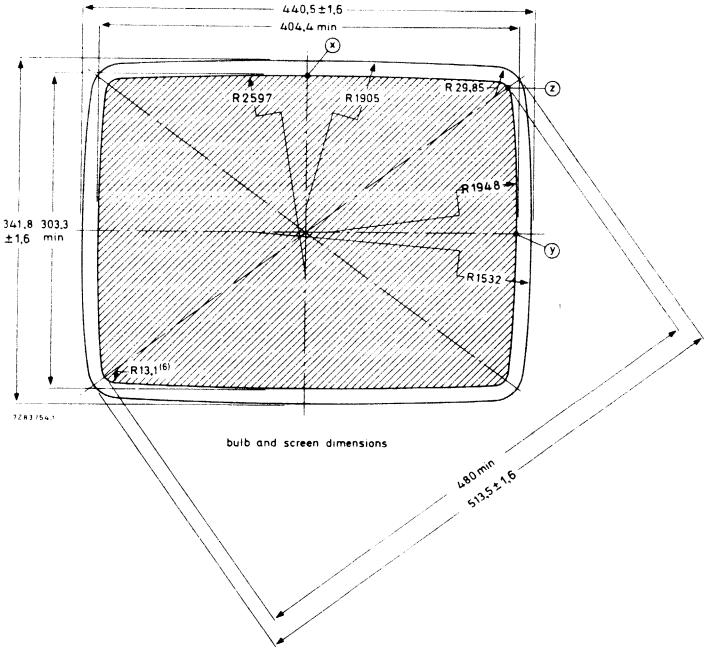

bulb and screen dimensions

MECHANICAL DATA (continued)

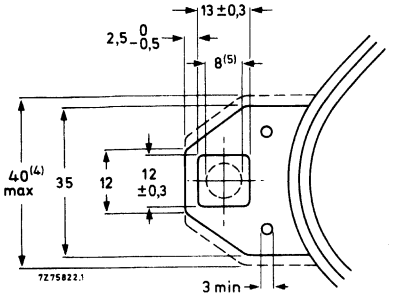

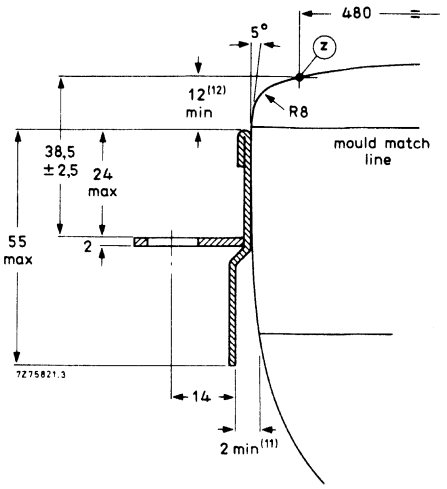

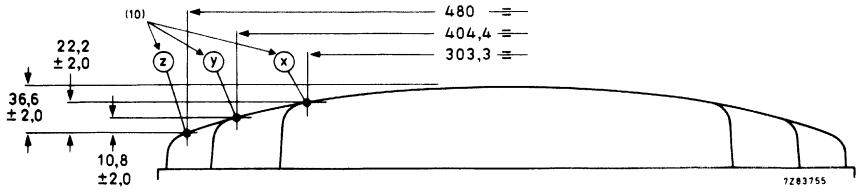

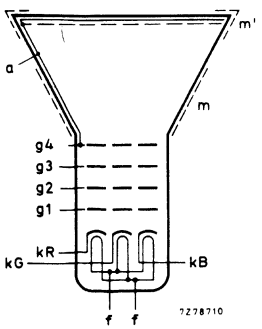

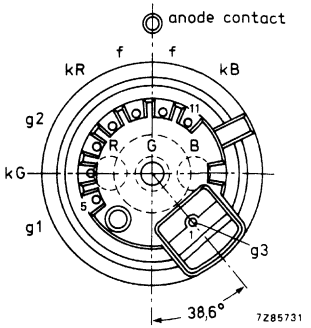

Notes to outline drawings on the preceding pages

1. Configuration of outer conductive coating may be different, but will contain the contact area as shown in the drawing.
2. To clean this area, wipe only with a soft lintless cloth.
3. The displacement of any lug with respect to the plane through the three other lugs is max. 2 mm. This deviation is incorporated in the tolerance of ± 2,5 mm.
4. Minimum space to be reserved for mounting lug.
5. The position of the mounting screw in the cabinet must be within a circle of 8 mm diameter drawn around the true geometrical positions, i.e. the corners of a rectangle of 434 mm x 337 mm.
6. Co-ordinates for radius R = 13,1 mm: x = 184,58 mm, y = 131,93 mm.
7. Not applicable.
8. The socket for this base should not be rigidly mounted; it should have flexible leads and be allowed to move freely. After mounting of the tube in the cabinet note that the position of the base can fall within a circle, having a diameter of max. 50 mm, concentric with an imaginary tube axis.
9. Small cavity contact J1-21, IEC 67-III-2.
10. The X, Y and Z reference points are located on the outside surface of the face plate at the intersection of the minor, major and diagonal screen axis respectively, with the minimum published screen.
11. Minimum distance between glass and rimband in plane of centre line apertures.
12. Distance from point z to any hardware.

Reference line gauge; GR90CJ4

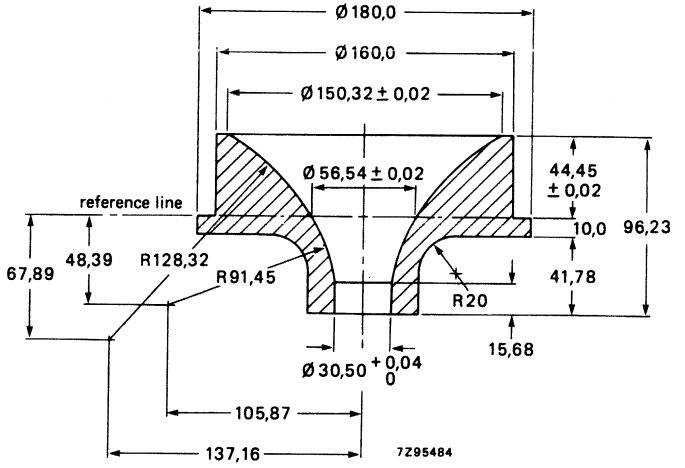

Maximum cone contour

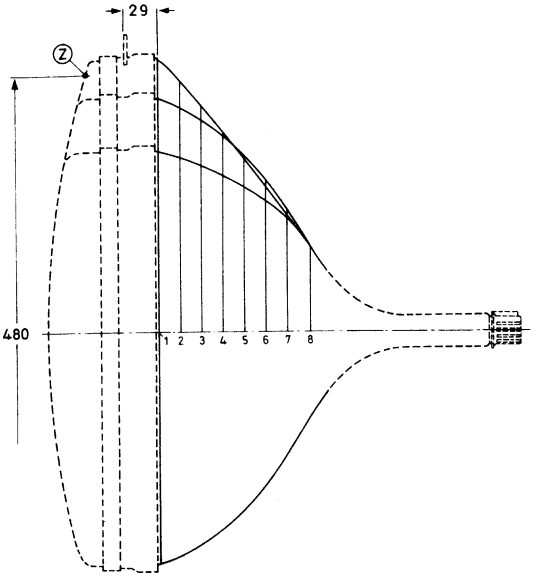

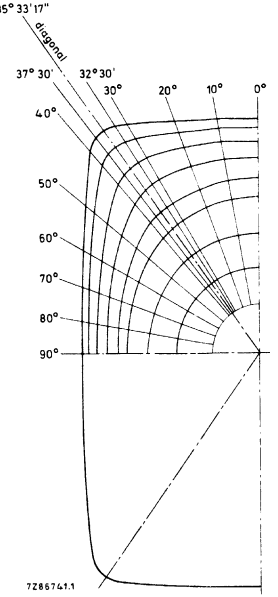

section	nom. distance from section 1	distance from centre (max. values)														
		0°	10°	20°	25°	30°	32° 30'	diag. axes	37° 30'	40°	45°	50°	60°	70°	80°	90°
1	0	218,7	221,9	231,2	238,5	247,5	252,2	255,9	254,6	247,7	230,1	215,1	193,0	179,2	171,5	169,0
2	20	209,8	212,4	220,3	226,0	232,5	235,3	236,5	235,0	230,2	216,9	204,4	184,9	172,3	165,3	163,0
3	40	197,5	199,4	204,7	208,1	211,1	211,9	211,4	210,0	207,0	198,6	189,5	173,9	163,2	157,1	155,1
4	60	182,2	183,2	185,8	187,1	187,7	187,4	186,4	185,3	183,3	178,2	172,1	160,7	152,4	147,4	145,8
5	80	163,2	163,5	163,9	163,7	163,1	162,4	161,4	160,6	159,3	156,3	152,9	145,8	140,1	136,6	135,4
6	100	146,1	146,1	145,7	145,1	144,2	143,6	142,8	142,2	141,4	139,5	137,5	133,3	129,7	127,3	126,5
7	120	112,3	112,3	111,9	111,7	111,3	111,1	110,9	110,7	110,5	110,0	109,5	108,6	107,8	107,3	107,1
8	141,7	79,8	79,8	79,8	79,8	79,8	79,8	79,8	79,8	79,8	79,8	79,8	79,8	79,8	79,8	79,8

Base JEDEC B8-274

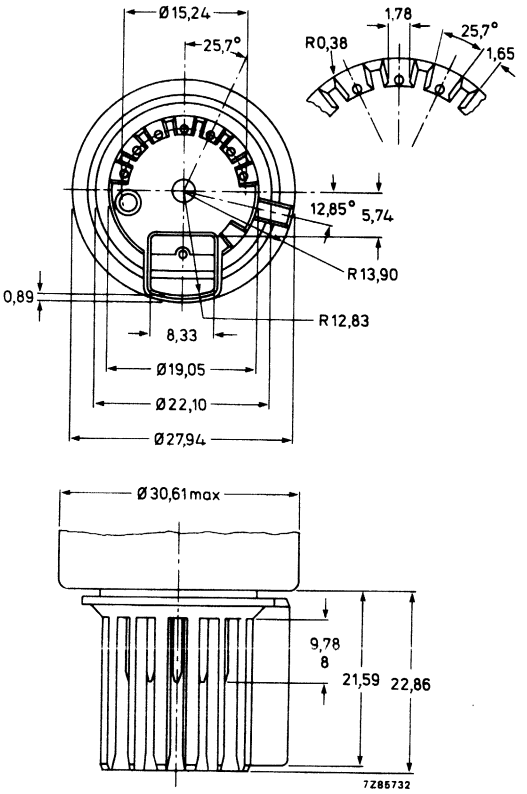

TYPICAL OPERATING CONDITIONS

The voltages are specified with respect to grid 1.

Anode voltage	$V_{a,g4}$	25 kV
Grid 3 (focusing electrode) voltage	V_{g3}	6,6 to 7,5 kV
Grid 2 voltage for a spot cut-off voltage V_k = 140 V	V_{g2}	390 to 760 V
Luminance at the centre of the screen*	L	170 cd/m²

* Tube settings adjusted to produce white D (x = 0,313, y = 0,329), focused raster, current density 0,4 μA/cm².

EQUIPMENT DESIGN VALUES

The values are valid for anode voltages between 20 and 27,5 kV.
The voltages are specified with respect to grid 1.

Grid 3 (focusing electrode) voltage	V_{g3}	26,6 to 29,8% of anode voltage
Grid 2 voltage and cathode voltage for visual extinction of focused spot	V_{g2} and V_k	see cut-off design chart*
Difference in cut-off voltages between guns in any tube	ΔV_k	lowest value > 80% of highest value
Video drive characteristics		see graphs**
Grid 3 (focusing electrode) current	I_{g3}	−5 to + 5 μA
Grid 2 current	I_{g2}	−5 to + 5 μA
Grid 1 current under cut-off conditions	I_{g1}	−5 to + 5 μA

To produce white D, CIE co-ordinates x = 0,313, y = 0,329.

Percentage of the total anode current supplied by each gun (typical)

red gun	38,3%
green gun	35,8%
blue gun	25,9%

Ratio of anode currents

red gun to green gun	min.	0,8
	average	1,1
	max.	1,4
red gun to blue gun	min.	1,1
	average	1,5
	max.	1,9
blue gun to green gun	min.	0,5
	average	0,7
	max.	0,9

* The common V_{g2} should be adjusted as follows:
Set the cathode voltage, V_k, for each gun at 150 V. Increase the V_{g2} from about 400 V to the value at which the raster of one of the guns becomes just visible. Now decrease the V_k of the remaining guns so that the rasters of these guns also become visible.

** For optimum picture performance it is recommended that the cathodes are not driven below + 10 V.

LIMITING VALUES (Design maximum rating system unless otherwise stated)

The voltages are specified with respect to grid 1.

Anode voltage	$V_{a,\,g4}$	max.	27,5 kV	notes 1, 2 and 3
		min.	20 kV	note 4
Long-term average current for three guns	I_a	max.	1000 μA	note 5
Grid 3 (focusing electrode) voltage	V_{g3}	max.	11 kV	
Grid 2 voltage, peak	V_{g2p}	max.	1000 V	
Cathode voltage				
positive	V_k	max.	400 V	
positive operating cut-off	V_k	max.	200 V	
negative	$-V_k$	max.	0 V	
negative peak	$-V_{kp}$	max.	2 V	
Heater voltage	V_f	6,3 V	+ 5 % −10 %	notes 1 and 6
Heater-cathode voltage				
heater negative with respect to cathode				
during equipment warm-up period not exceeding 15 s	V_{kf}	max.	450 V	note 1
after equipment warm-up period	V_{kf}	max.	250 V	
heater positive with respect to cathode	$-V_{kfp}$	peak	200 V	note 1
	$-V_{kf}$	max. (d.c. component value)	0 V	

Notes

1. Absolute maximum rating system.
2. The X-ray dose rate remains below the acceptable value of 0,5 mR/h, measured with ionization chamber when the tube is used within its limiting values.
3. During adjustment on the production line this value is likely to be surpassed considerable. It is therefore strongly recommended to first make the necessary adjustments for normal operation without picture tube.
4. Operation of the tube at lower voltages impairs the luminance and resolution.
5. The short-term average anode current should be limited by circuitry to 1500 μA.
6. For maximum cathode life and optimum performance, it is recommended that the heater supply be designed for 6,3 V at zero beam current.

FLASHOVER PROTECTION

With the high voltage used with this tube (max. 27,5 kV) internal flashovers may occur. As a result of the Soft-Flash technology these flashover currents are limited to approx. 60 A offering higher set reliability, optimum circuit protection and component savings.
Primary protective circuitry using properly grounded spark gaps and series isolation resistors (preferably carbon composition) is still necessary to prevent tube damage. The spark gaps should be connected to all picture tube electrodes at the socket according to the figure below; they are not required on the heater pins. No other connections between the outer conductive coating and the chassis are permissible.
The spark gaps should be designed for a breakdown voltage at the focusing electrode (g3) of 11,5 kV (1,5 x V_{g3} max. at $V_{a,g4}$ = 25 kV), and at the other electrodes of 1,5 to 2 kV.
The values of the series isolation resistors should be as high as possible (min. 1,5 kΩ) without causing deterioration of the circuit performance. The resistors should be able to withstand an instantaneous surge of 20 kV for the focusing circuit and 12 kV for the remaining circuits without arcing.
Additional information is available on request.

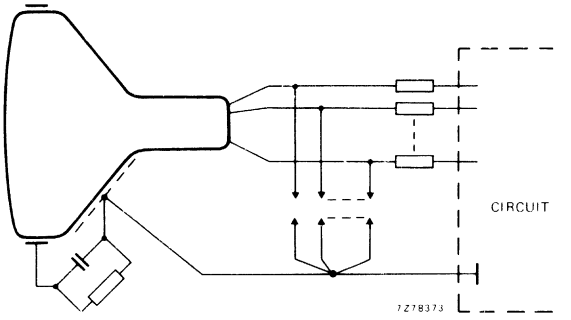

BEAM CORRECTIONS

Maximum required correction for register, as measured at the centre of the screen in any direction	0,08 mm
Centre convergence displacement of the blue and red beams is contained within a circle; max. diameter of circle	5 mm
Centre convergence displacement between the green beam and converged blue and red beams is contained within a circle; maximum diameter of circle	2,5 mm
Maximum centring error in any direction after colour purity, static convergence, and horizontal centre line correction, measured with deflection coils in nominal position	5 mm

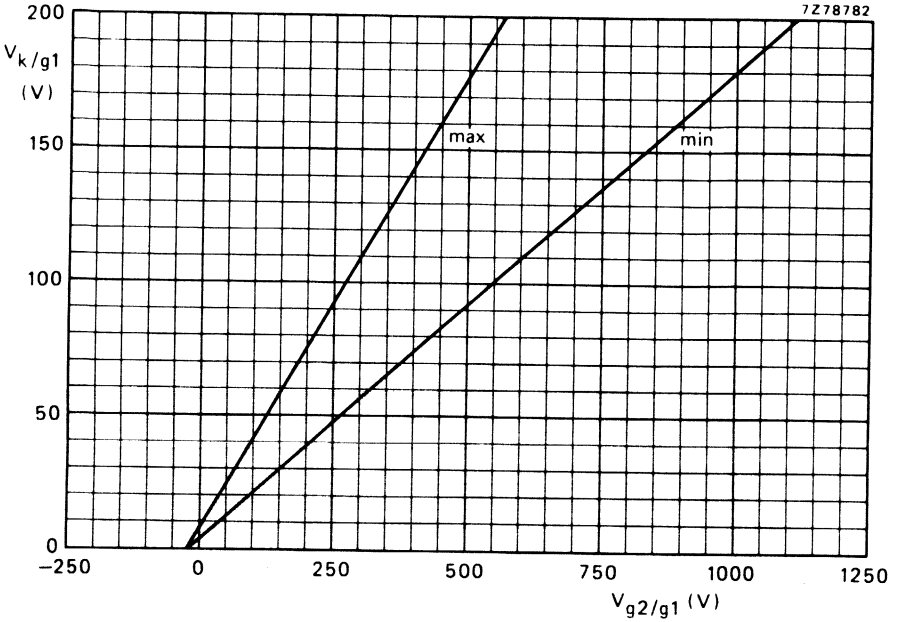

Spot cut-off design chart (cathode drive), V_{g3} adjusted for focus, $V_{a,g4}$ = 20 to 27,5 kV.

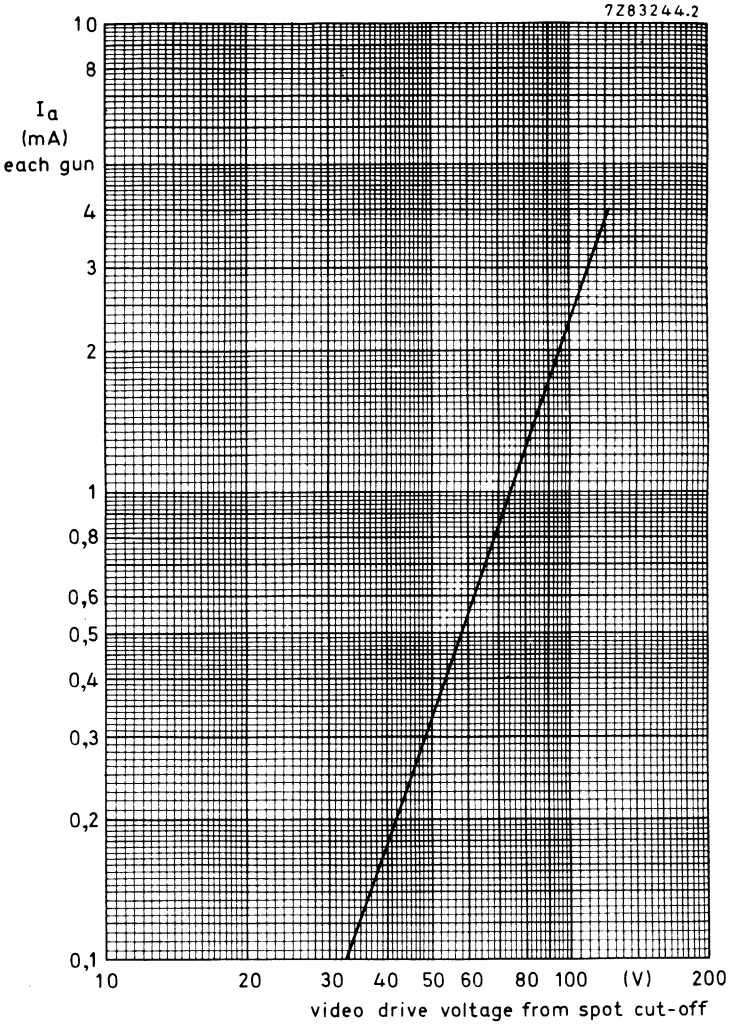

Typical cathode drive characteristics

V_f = 6,3 V
$V_{a,g4}$ = 25 kV
V_{g3} adjusted for focus
V_{g2} adjusted to provide spot cut-off for V_K = 140 V

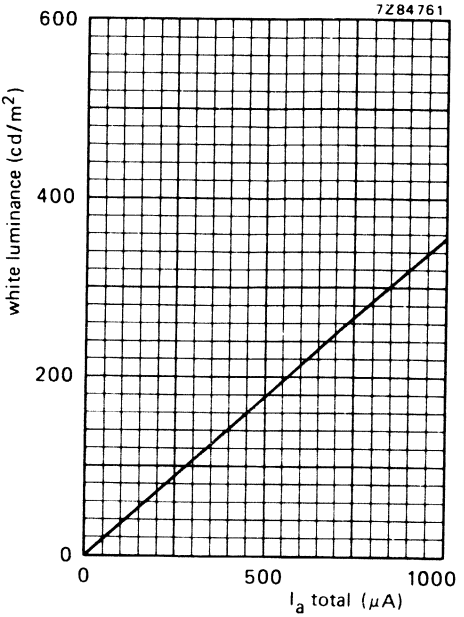

Luminance at the centre of the screen as a function of I_{total}.
$V_{a,g4}$ = 25 kV.
Scanned area = 404,4 mm x 303,3 mm;
CIE co-ordinates x = 0,313, y = 0,329.

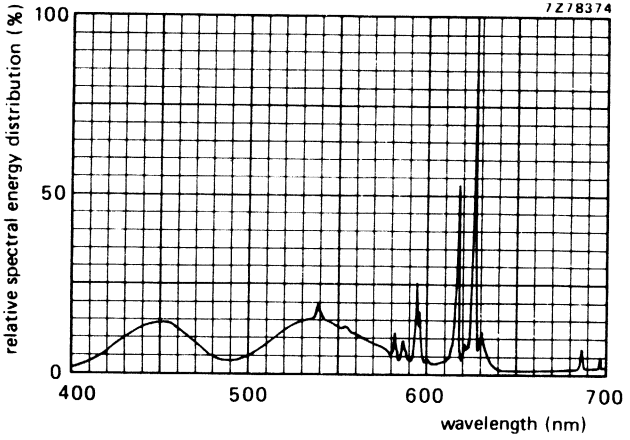

Simultaneous excitation of red, green and blue phosphor, measured in a tube, to produce white of x = 0,313, y = 0,329. Exact shape of the peaks depends on the resolution of the measuring apparatus.

Colour co-ordinates:	x	y
red	0,635	0,340
green	0,315	0,600
blue	0,150	0,060

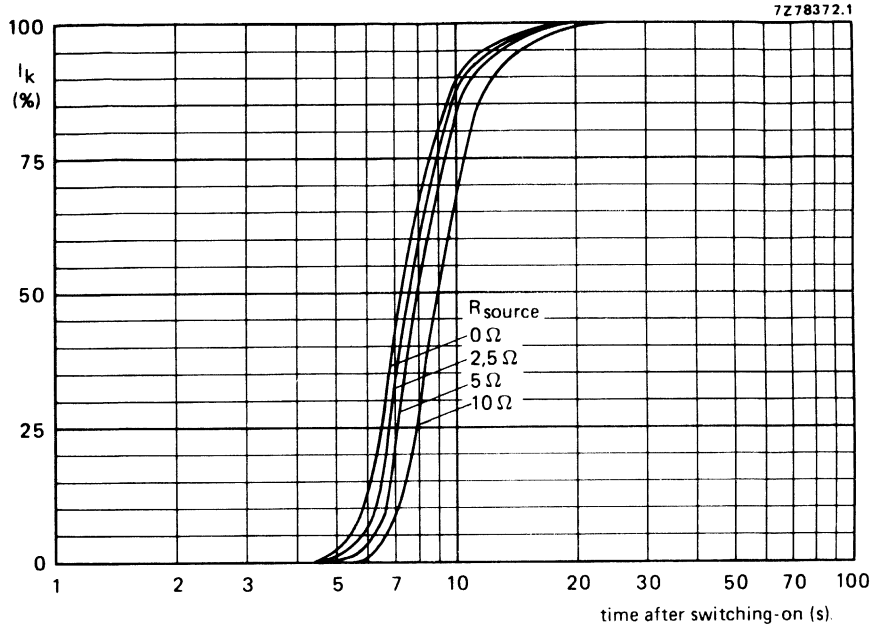

Cathode heating time after switching on, measured under typical operating conditions.

DEGAUSSING

The picture tube is provided with an internal magnetic shield. This shield and the shadow mask with its suspension system may be provided with an automatic degaussing system, consisting of two coils covering top and bottom cone parts, or one large coil shaped in the form of a figure eight, with one half on the top and the other half on the bottom cone part.
For proper degaussing an initial magnetomotive force (m.m.f.) of 300 ampere-turns is required in each of the coils. This m.m.f. has to be gradually decreased by appropriate degaussing circuitry. In the steady state, no significant m.m.f. should remain in the coils ($\leqslant$ 0,3 ampere-turns).
If single-phase power rectification is employed in the t.v. circuitry, provision should be included to prevent asymmetric distortion of the a.c. voltage applied to the degaussing circuit due to high d.c. inrush currents.

Examples of a double-coil and of a single-coil system are given below.

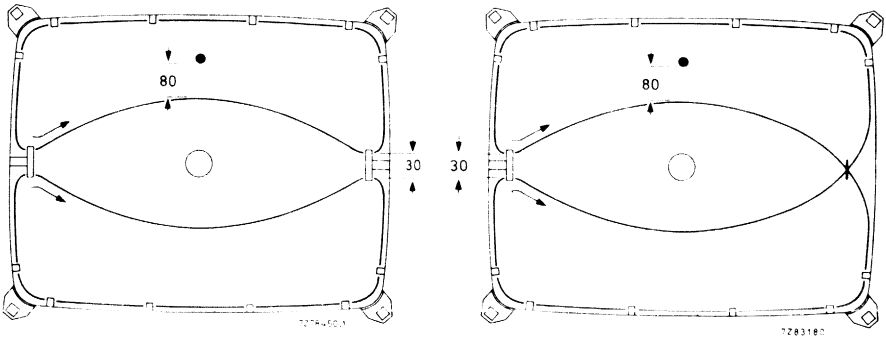

Position of degaussing coils on the picture tube.

Degaussing circuit using dual PTC thermistor.

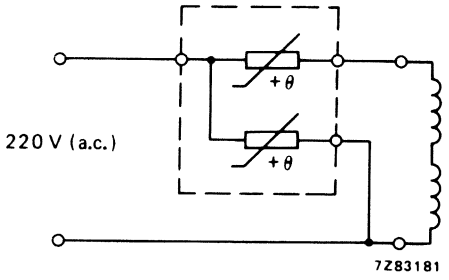

Data of each degaussing coil

	double-coil system	single-coil system
Circumference	117 cm	237 cm
Number of turns	60	60
Copper-wire diameter	0,35 mm	0,35 mm
Resistance (R_c)	12,5 Ω	25,1 Ω
Catalogue number of appropriate dual PTC thermistor	2322 662 98009	2322 662 98009

DEFLECTION UNIT

- **Raster Correction Free**

QUICK REFERENCE DATA

Picture tube	
gun arrangement	in line
diagonal	51 cm (20 in)
neck diameter	29,1 mm
Deflection angle	90°
Line deflection current, edge to edge at 25 kV	3,0 A(p-p)
Inductance of line coils, parallel connected	1,91 mH
Field deflection current, edge to edge at 25 kV	0,447 A(p-p)
Resistance of field coils, series connected	52,8 Ω

APPLICATION

This deflection unit, in conjunction with devices for colour purity and static convergence is for 90° in-line colour picture tubes A51-590X and A51-591X, with a neck diameter of 29,1 mm.
The unit requires no raster correction circuitry.

DESCRIPTION

The deflection unit consists of saddle-shaped line deflection coils, toroidal wound field deflection coils, and metal fins, thus forming a raster correction free hybrid yoke. The unit has a metal non-magnetic clamping ring at the rear, to fix the deflection unit on the neck of the picture tube.

MECHANICAL DATA

Dimensions in mm

Outlines

The deflection unit fits a tube with a neck diameter of $29{,}1^{+0{,}9}_{-0{,}7}$ mm.

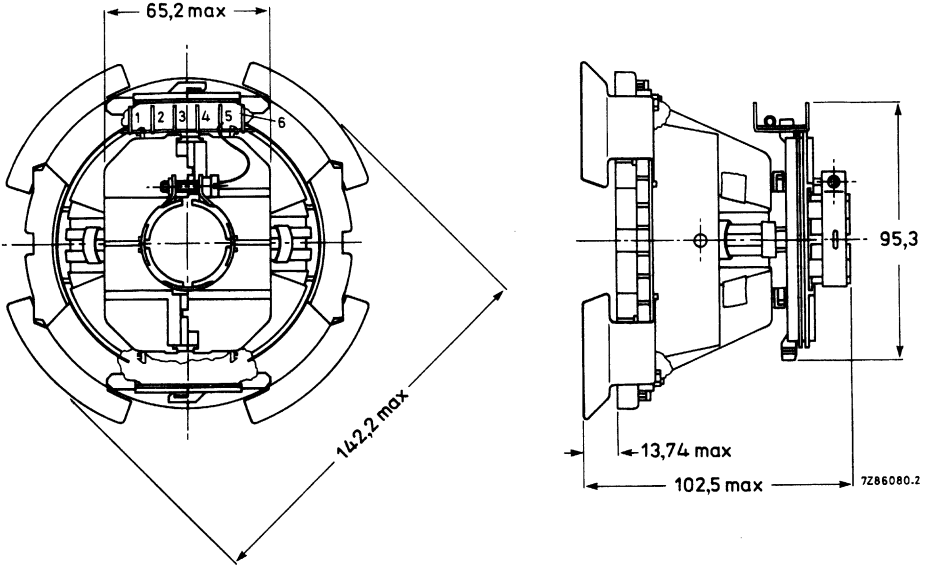

Fig. 1.

Maximum operating temperature (average copper temperature measured with resistance method)	+90 °C
Storage temperature range	−20 to +90 °C
Flame retardent	according to UL 1413, category 94-V1
Torque on neck clamp screw	1,4 Nm

ENVIRONMENTAL TEST SPECIFICATIONS

Vibration	IEC 68-2-6 (test Fc)
Bump	IEC 66-2-29 (test Eb; 35g)
Cold	IEC 68-2-1 (test Ab)
Dry heat	IEC 68-2-2 (test Bb)
Damp heat, steady state	IEC 68-2-3 (test Ca)
Cyclic damp heat	IEC 68-2-30 (test Db)
Change of temperature	IEC 68-2-14 (test Nb)

ELECTRICAL DATA

Line coils	parallel connected
Inductance at 1 V (r.m.s.), 1 kHz	1,91 mH ± 5%
Resistance at 25 °C	1,75 Ω ± 10%
Line deflection current, edge to edge, at 25 kV	3,0 A (p-p)
Voltage during line scan, edge to edge, at 25 kV, scan period 52,5 μs	109 V
Field coils	series connected
Inductance at 1 V (r.m.s.), 1 kHz	110 mH ± 10%
Resistance at 25 °C	52,8 Ω ± 7%
Field deflection current, edge to edge, at 25 kV	0,447 A(p-p)
Cross-talk	a voltage of 10 V, 15625 Hz applied to the line coils causes no more than 0,2 V across the field coils (damping resistors included)
Insulation resistance at 1 kV (d.c.)	
between line and field coils	> 500 MΩ
between line coil and core clamp	> 500 MΩ
between field coil and core clamp	> 10 MΩ

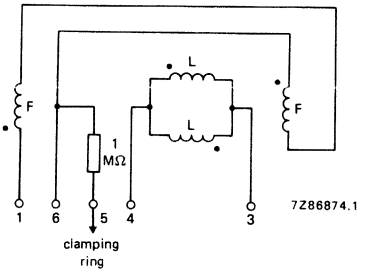

Fig. 2 Connection diagram, L = Line, F = Field.

ADJUSTMENT

- Adjust the static convergence with the four and six-pole magnets of the multipole unit AT1052 for the relative movement of the beams under influence of a four or six-pole magnet.
- Adjust colour purity by axial movement of the deflection yoke and adjustment of the two-pole magnets for centring of the beams.
- Tighten the screw of the clamping ring on the deflection yoke to secure the axial position of the unit on the picture tube.
- Readjust, if necessary, the convergence with the four and six-pole magnets.
- Tilt the unit in either horizontal or vertical direction, or in both directions so that blue, green and red lines converge at the end of the horizontal and vertical axis.
- This position of the unit has to be secured by three rubber wedges places between the picture tube and the deflection unit. These wedges have to be cemented on to the picture tube.

DEFLECTION UNIT

- **Raster Correction Free**

QUICK REFERENCE DATA

Picture tube	
gun arrangement	in line
diagonal	51 cm (20 in)
neck diameter	29,1 mm
Deflection angle	90°
Line deflection current, edge to edge at 25 kV	3,23 A(p-p)
Inductance of line coils, parallel connected	1,7 mH
Field deflection current, edge to edge at 25 kV	0,82 A(p-p)
Resistance of field coils, parallel connected	13,6 Ω

APPLICATION

This deflection unit, in conjunction with devices for colour purity and static convergence is for 90° in-line colour picture tubes A51-590X and A51-591X, with a neck diameter of 29,1 mm.
The unit requires no raster correction circuitry.

DESCRIPTION

The deflection unit consists of saddle-shaped line deflection coils, toroidal wound field deflection coils, and metal fins, thus forming a raster correction free hybrid yoke. The unit has a metal non-magnetic clamping ring at the rear, to fix the deflection unit on the neck of the picture tube.

MECHANICAL DATA

Dimensions in mm

Outlines

The deflection unit fits a tube with a neck diameter of 29,1 $^{+0,9}_{-0,7}$ mm.

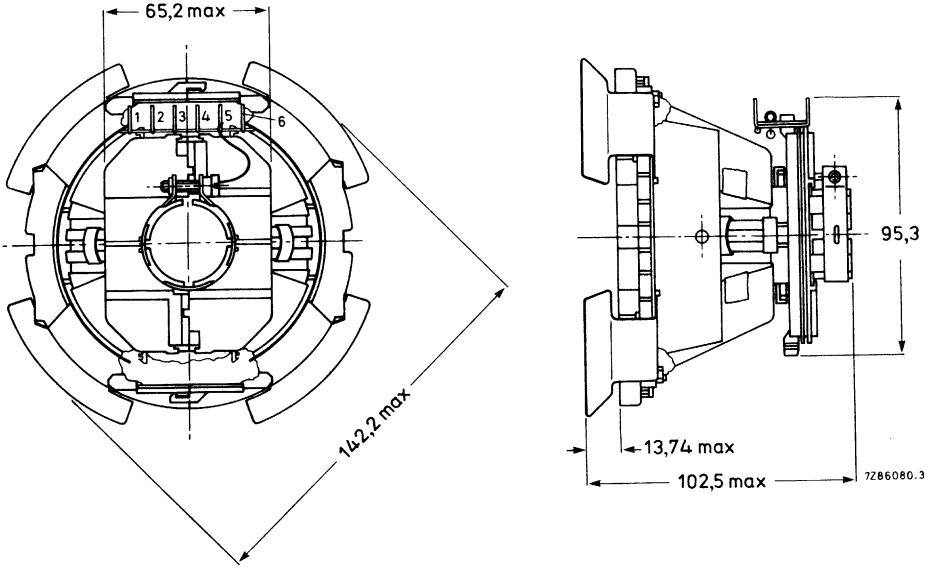

Fig. 1.

Maximum operating temperature (average copper temperature measured with resistance method)	+ 90 °C
Storage temperature range	−20 to + 90 °C
Flame retardent	according to UL 1413, category 94-V1
Torque on neck clamp screw	1,4 Nm

ENVIRONMENTAL TEST SPECIFICATIONS

Vibration	IEC 68-2-6 (test Fc)
Bump	IEC 66-2-29 (test Eb; 35g)
Cold	IEC 68-2-1 (test Ab)
Dry heat	IEC 68-2-2 (test Bb)
Damp heat, steady state	IEC 68-2-3 (test Ca)
Cyclic damp heat	IEC 68-2-30 (test Db)
Change of temperature	IEC 68-2-14 (test Nb)

ELECTRICAL DATA

Line coils	parallel connected
Inductance at 1 V (r.m.s.), 1 kHz	1,7 mH ± 5%
Resistance at 25 °C	1,8 Ω ± 10%
Line deflection current, edge to edge, at 25 kV	3,23 A (p-p)
Voltage during line scan, edge to edge, at 25 kV, scan period 52,5 μs	105 V
Field coils	parallel connected
Inductance at 1 V (r.m.s.), 1 kHz	29 mH ± 10%
Resistance at 25 °C	13,6 Ω ± 7%
Field deflection current, edge to edge, at 25 kV	0,82 A (p-p)
Cross-talk	a voltage of 10 V, 15625 Hz applied to the line coils causes no more than 0,2 V across the field coils (damping resistors included)
Insulation resistance at 1 kV (d.c.)	
between line and field coils	> 500 MΩ
between line coil and core clamp	> 500 MΩ
between field coil and core clamp	> 10 MΩ

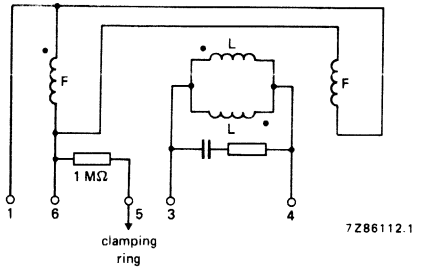

Fig. 2 Connection diagram, L = Line, F = Field.

ADJUSTMENT

- Adjust the static convergence with the four and six-pole magnets of the multipole unit AT1052 for the relative movement of the beams under influence of a four or six-pole magnet.
- Adjust colour purity by axial movement of the deflection yoke and adjustment of the two-pole magnets for centring of the beams.
- Tighten the screw of the clamping ring on the deflection yoke to secure the axial position of the unit on the picture tube.
- Readjust, if necessary, the convergence with the four and six-pole magnets.
- Tilt the unit in either horizontal or vertical direction, or in both directions so that blue, green and red lines converge at the end of the horizontal and vertical axis.
- This position of the unit has to be secured by three rubber wedges placed between the picture tube and the deflection unit. These wedges have to be cemented on to the picture tube.

FLAT SQUARE Hi-Bri COLOUR PICTURE TUBE

- Flat and square screen
- 110° deflection
- Shadow mask of NiFe alloy with low thermal expansion
- In-line, hi-bi potential A R T* gun with quadrupole cathode lens
- 29,1 mm neck diameter
- Mask with corner suspension
- Hi-Bri technology
- Pigmented phosphors
- Quick-heating low-power cathodes
- Soft-flash
- Slotted shadow mask optimized for minimum moiré at 625 lines systems
- Internal magnetic shield
- Internal multipole
- Reinforced envelope for push-through mounting
- Anti-crackle coating

QUICK REFERENCE DATA

Deflection angle	110°
Minimum useful screen diagonal	51 cm
Overall length	36 cm
Neck diameter	29,1 mm
Heating	6,3 V, 310 mA
Focusing voltage	31% of anode voltage

* Aberration Reducing Triode.

ELECTRON-OPTICAL DATA

Electron gun system			unitized triple-aperture electrodes; aberration reducing triode
Focusing method			electrostatic
Focus lens			hi-bi-potential
Deflection method			magnetic
Deflection angles			
diagonal			110°
horizontal			97°
vertical			77°

ELECTRICAL DATA

Capacitances			
anode to external conductive coating	$C_{a, g5, g4/m}$	max.	1800 pF
		min.	1400 pF
anode to metal rimband	$C_{a, g5, g4/m'}$		250 pF
cathodes of all guns (connected in parallel) to all other electrodes	C_k		15 pF
cathode of any gun to all other electrodes	C_{kR}, C_{kG}, C_{kB}		5 pF
grid 3 (focusing electrode) to all other electrodes	C_{g3}		6 pF
grid 1 to all other electrodes	C_{g1}		17 pF
grid 2 to all other electrodes	C_{g2}		4,5 pF
Resistance between rimband and external conductive coating		min.	50 MΩ
Heating: indirect by a.c. (preferably mains or line frequency) or d.c.			
heater voltage	V_f		6,3 V
heater current	I_f		310 mA

OPTICAL DATA

Screen	metal-backed vertical phosphor stripes, phosphor lines follow glass contour
Screen finish	high gloss
Useful screen dimensions	
diagonal	min. 508,0 mm
horizontal axis	min. 411,4 mm
vertical axis	min. 310,8 mm
area	min. 1265 cm^2
Positional accuracy of the screen with respect to the glass contour	see Figure on the next page
Phosphors	
red	pigmented europium activated rare earth
green	sulphide type
blue	pigmented sulphide type
Persistence	medium short

A = 171,7 mm
B = 223,7 mm
C = 115,6 mm
D = 173,9 mm
E = 23,5 mm

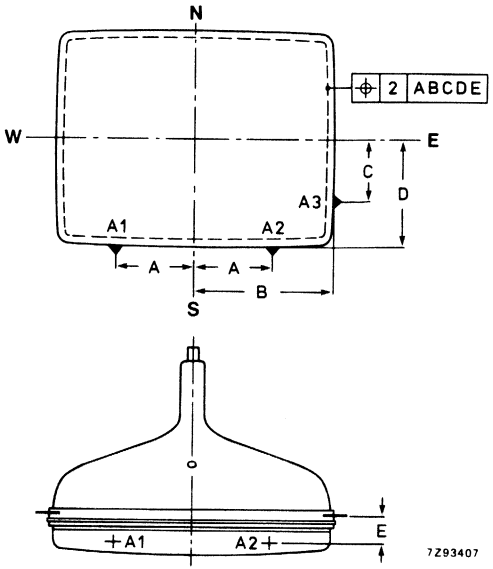

DEVELOPMENT DATA

		x	y
Colour co-ordinates			
red		0,635	0,340
green		0,315	0,600
blue		0,150	0,060
Centre-to-centre distance of identical colour phosphor stripes		approx. 0,6 mm	
Light transmission of face glass at screen centre		52%	
Luminance at the centre of the screen	L	130 cd/m² *	

MECHANICAL DATA (see also the figures on the following pages)

Overall length	362 ± 6 mm
Neck diameter	$29{,}1^{+1{,}4}_{-0{,}7}$ mm
Base	JEDEC B10-277
Anode contact	small cavity contact J1-21, IEC 67-III-2
Mounting position	anode contact on top
Implosion protection	rimband provided with facilities to accommodate clips for mounting of degaussing coils
Net mass	approx. 15 kg

Handling

During shipment and handling the tube should not be subjected to accelerations greater than 35g in any direction.

* Tube setting adjusted to produce white D (x = 0,313, y = 0,329), focused raster, current density 0,4 μA/cm².

MECHANICAL DATA (continued)

Dimensions in mm

Notes are given after the drawings.

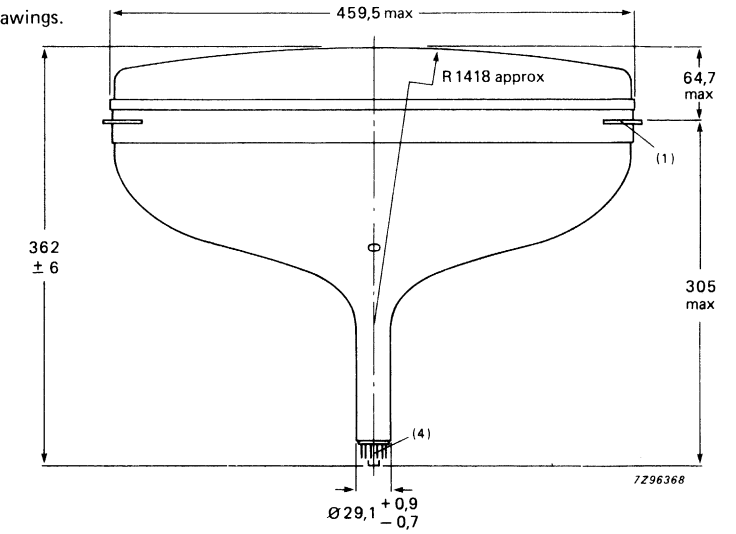

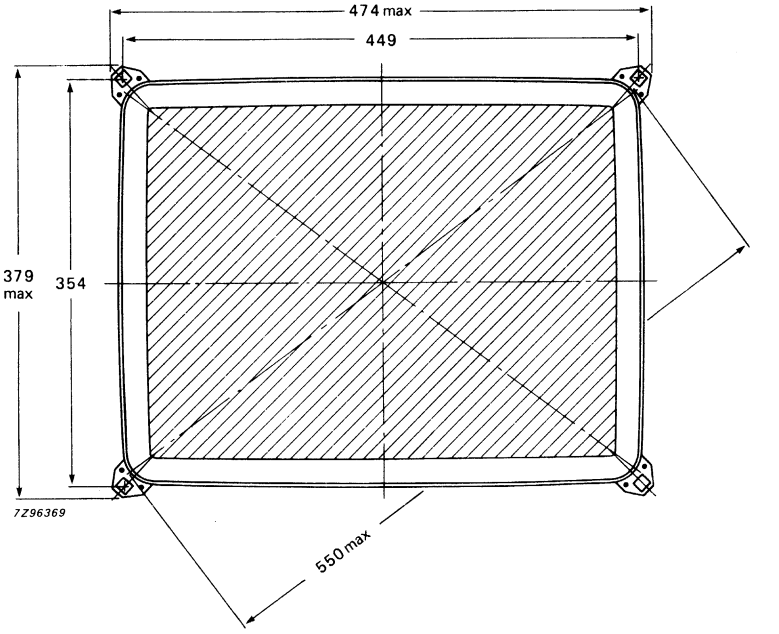

DEVELOPMENT DATA

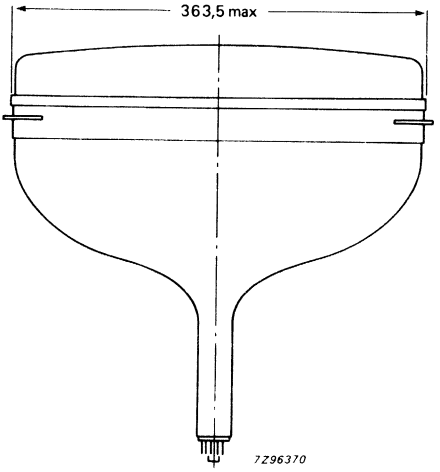

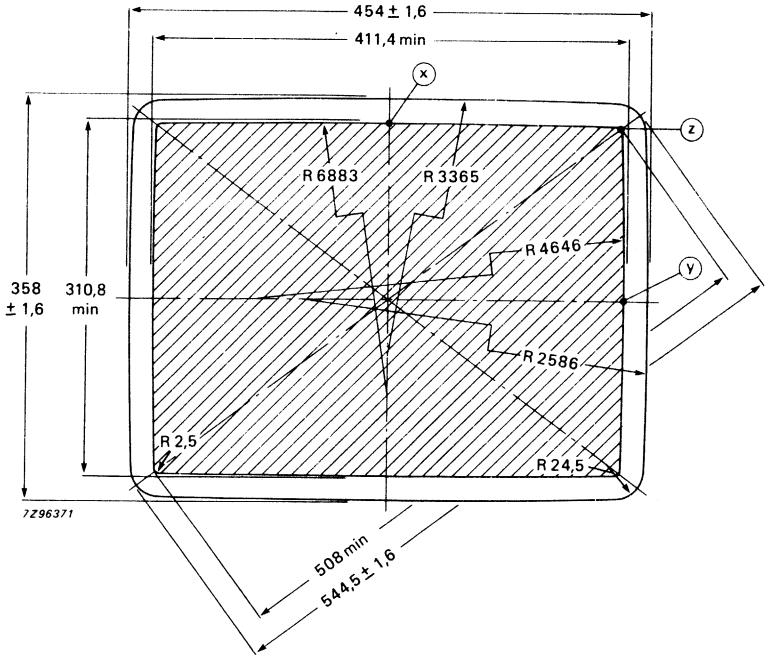

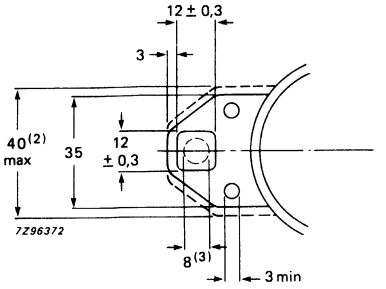
12 ± 0,3
3
40(2) max
35
12 ± 0,3
8(3)
3 min
7Z96372

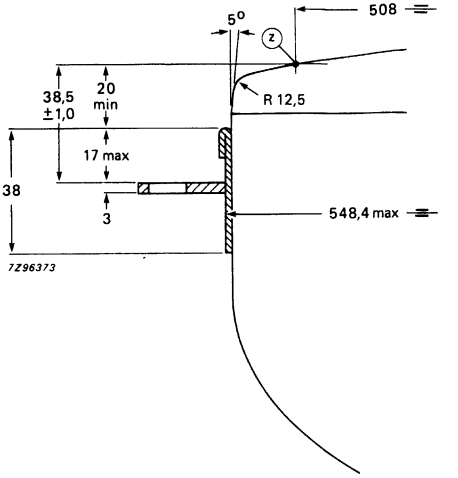
5°
z
508
38,5 ±1,0
20 min
R 12,5
17 max
38
3
548,4 max
7Z96373

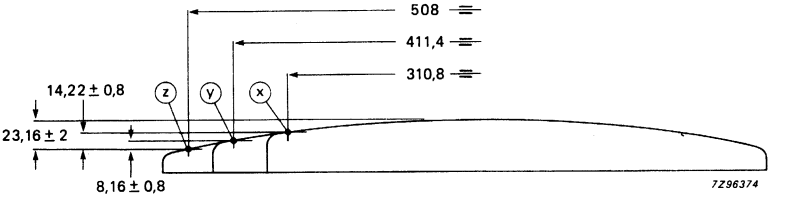
508
411,4
310,8
14,22 ± 0,8
z
y
x
23,16 ± 2
8,16 ± 0,8
7Z96374

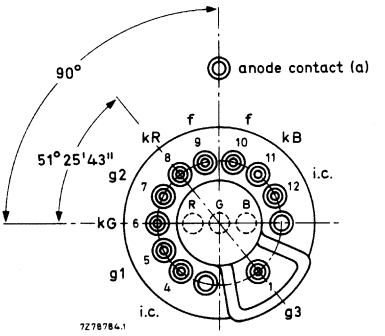
90°
anode contact (a)
51°25'43"
kR
f
f
kB
g2
i.c.
kG
R
G
B
g1
i.c.
g3
7Z78784.1

Notes to outline drawings on the preceding pages

1. The displacement of any lug with respect to the plane through the three other lugs is max. 1,5 mm.
2. Minimum space to be reserved for mounting lug.
3. The position of the mounting screw in the cabinet must be within a circle of 8 mm diameter drawn around the true geometrical positions, i.e. the corners of a rectangle of 449 mm x 354 mm.
4. The socket for this base should not be rigidly mounted; it should have flexible leads and be allowed to move freely. After mounting of the tube in the cabinet note that the position of the base can fall within a circle, having a diameter of max. 50 mm, concentric with an imaginary tube axis.

Sagittal heights with reference to screen centre at the edge of the minimum useful screen

coordinates x mm	y mm	sagittal height mm
0*	155,4	9,0
20	155,4	9,1
40	155,3	9,4
60	155,1	10,1
80	154,9	11,0
100	154,7	12,2
120	154,4	13,7
140	153,9	15,4
160	153,5	17,5
180	153,0	19,9
200	152,5	22,7
203,2**	152,4	23,2
203,3	150	22,9
203,6	140	21,8
204,2	120	19,9
204,6	100	18,4
205,0	80	17,2
205,3	60	16,3
205,5	40	15,6
205,7	20	15,8
205,7▲	0	15,0

DEVELOPMENT DATA

* Point x
** Diagonal.
▲ Point y

10-pin base; JEDEC B10-277

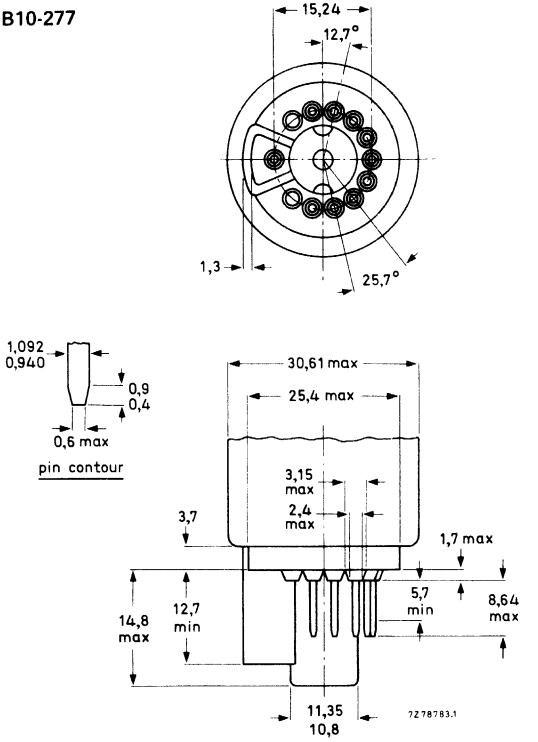

Cavity cap JEDEC J1-21, IEC 67-III-2

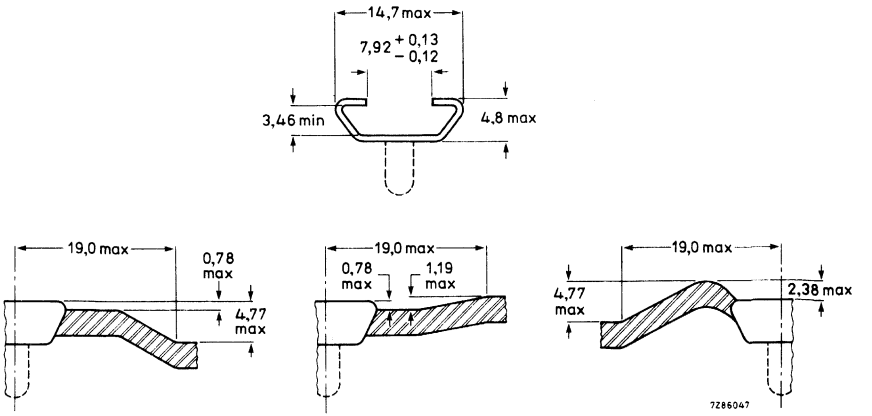

DEVELOPMENT DATA

Maximum cone contour

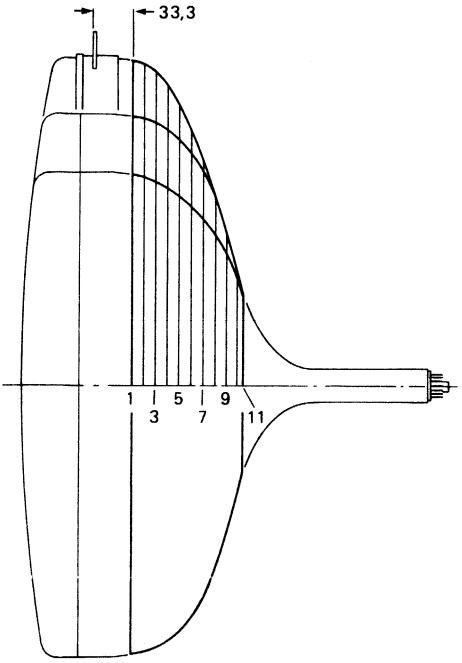

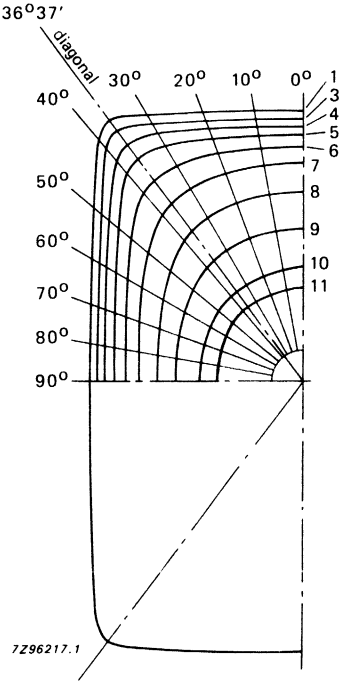

section	nom. distance from section 1	distance from centre										
		0°	10°	20°	30°	36,87°	40°	50°	60°	70°	80°	90°
1	0,00	225,8	229,0	239,2	257,7	272,0	267,4	228,1	203,2	188,0	179,7	177,1
2	10,00	224,2	227,4	237,5	255,9	270,0	264,8	226,3	201,7	186,6	178,4	175,8
3	20,00	220,0	223,2	233,1	250,9	263,1	257,1	220,7	196,8	182,1	174,1	171,5
4	30,00	214,0	217,0	226,4	242,8	252,1	246,3	212,9	190,2	176,2	168,5	166,1
5	40,00	206,4	209,2	217,5	231,1	235,3	230,1	202,1	181,4	168,4	161,3	159,0
6	50,00	196,7	198,9	205,4	212,9	211,5	207,4	187,2	169,7	158,2	151,8	149,8
7	60,00	182,2	183,8	187,5	189,1	185,3	182,1	167,9	154,3	144,7	139,2	137,4
8	70,00	158,0	159,1	161,0	160,7	157,7	155,4	146,0	136,2	128,7	124,2	122,7
9	80,00	127,9	128,6	129,8	129,6	128,0	126,8	121,6	115,6	110,4	107,0	105,8
10	90,00	95,2	95,4	95,6	95,1	94,3	93,9	92,0	89,7	87,6	86,0	85,4
11	94,6	75,9	75,8	75,7	75,4	75,1	75,0	74,6	74,2	73,8	73,6	73,5

TYPICAL OPERATING CONDITIONS

The voltages are specified with respect to grid 1.

Anode voltage	$V_{a,g4}$	25 kV
Grid 3 (focusing electrode) voltage	V_{g3}	7,25 to 8,25 kV
Grid 2 voltage for a spot cut-off voltage V_k = 130 V	V_{g2}	see below
Heater voltage under operating conditions	V_f	6,3 V

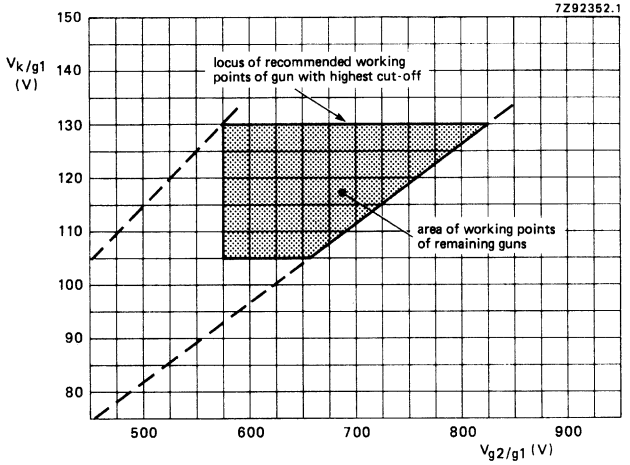

Spot cut-off design chart.

Grid 2 voltage (V_{g2}) adjusted for highest gun spot cut-off voltage V_k = 130 V.

Remaining guns adjusted for spot cut-off by means of cathode voltage

V_{g2} range 575 to 825 V;

V_k range 105 to 130 V.

Adjustment procedure:

Set the cathode voltage (V_k) for each gun at 130 V; increase the grid 2 voltage (V_{g2}) from approx. 550 V to the value at which one of the colours become just visible. Now decrease the cathode voltage of the remaining guns so that the other colours also become visible.

EQUIPMENT DESIGN VALUES

The values are valid for anode voltages between 20 and 27,5 kV.
The voltages are specified with respect to grid 1.

Grid 3 (focusing electrode) voltage	V_{g3}	29 to 33% of anode voltage
Grid 2 voltage and cathode voltage for visual extinction of focused spot	V_{g2} and V_k	see spot cut-off design chart
Difference in cut-off voltages between guns in any tube	ΔV_k	lowest value > 80% of highest value
Heater voltage	V_f	6,3 V at zero beam current
Video drive characteristics		see graphs*
Grid 3 (focusing electrode) current	I_{g3}	−2 to + 2 μA
Grid 2 current	I_{g2}	−2 to + 2 μA
Grid 1 current under cut-off conditions	I_{g1}	−2 to + 2 μA
To produce white of 6500K + 7 M.P.C.D. (CIE co-ordinates x = 0,313, y = 0,329)		
Percentage of the total anode current supplied by each gun (typical)		
red gun		38,3%
green gun		35,8%
blue gun		25,9%
Ratio of anode currents		
red gun to green gun		min. 0,8
		average 1,1
		max. 1,4
red gun to blue gun		min. 1,1
		average 1,5
		max. 1,9
blue gun to green gun		min. 0,5
		average 0,7
		max. 1,0
Insulation resistance between each cathode and grid 1 and heater		min. 50 MΩ

DEVELOPMENT DATA

* For optimum picture performance it is recommended that the cathodes are not driven below + 1 V.

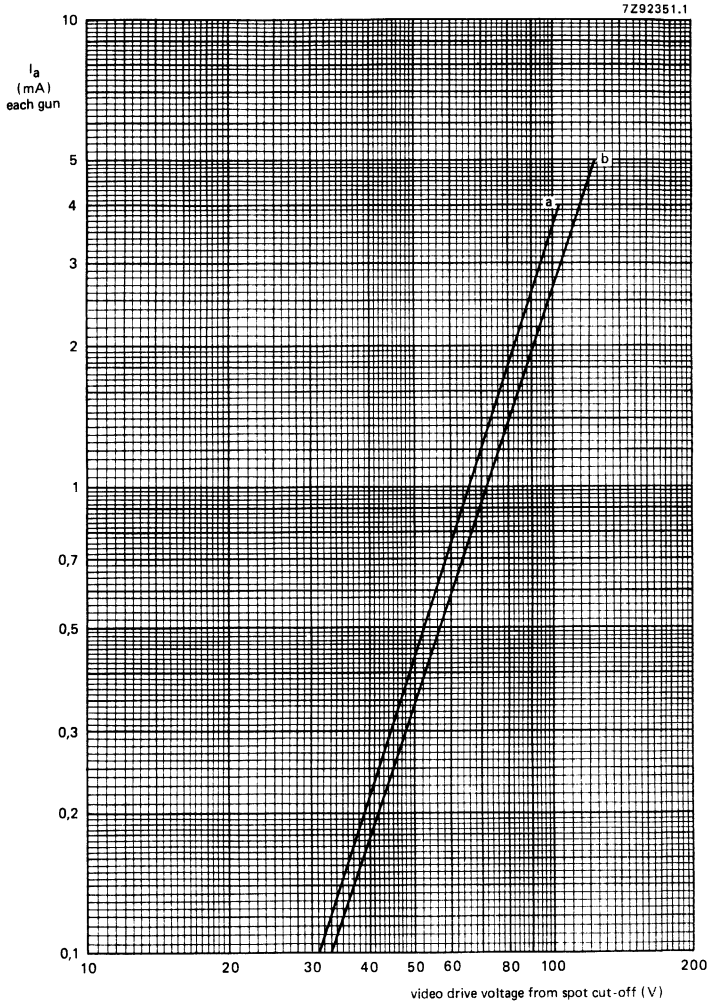

Typical cathode drive characteristic.

V_f = 6,3 V;

$V_{a, g4}$ = 25 kV;

V_{g3} adjusted for focus;

V_{g2} (each gun) adjusted to provide spot cut-off for V_k = 105 V (curve a) and V_k = 130 V (curve b).

DEVELOPMENT DATA

LIMITING VALUES (Design maximum rating system unless otherwise stated)

The voltages are specified with respect to grid 1.

				notes
Anode voltage	$V_{a,g4}$	max.	27,5 kV	1, 2, 3
		min.	20 kV	1, 4
Long-term average current for three guns	I_a	max.	1000 μA	5
Grid 3 (focusing electrode) voltage	V_{g3}	max.	11 kV	
Grid 2 voltage	V_{g2}	max.	1200 V	6
Cathode voltage				
positive	V_k	max.	400 V	
positive operating cut-off	V_k	max.	200 V	
negative	$-V_k$	max.	0 V	
negative peak	$-V_{kp}$	max.	2 V	
Cathode to heater voltage				
positive	V_{kf}	max.	250 V	
positive peak	V_{kfp}	max.	300 V	1
negative	$-V_{kf}$	max.	135 V	
negative peak	$-V_{kfp}$	max.	180 V	1
Heater voltage	V_f		6,3 V $^{+5\ \%}_{-10\ \%}$	1, 7

LIMITING CIRCUIT VALUES

Grid 3 circuit resistance	R_{g3}	max.	70 MΩ	
Grid 1 to cathode circuit resistance (each gun)	R_{g1k}	max.	0,75 MΩ	

BEAM CENTRING

Maximum centring error in any direction	3	mm

Notes

1. Absolute maximum rating system.
2. The X-ray dose rate remains below the acceptable value of 36 pA/kg (0,5 mR/h), measured with ionization chamber when the tube is used within its limiting values.
3. During adjustment on the production line this value is likely to be surpassed considerably. It is therefore strongly recommended to first make the necessary adjustments for normal operation without picture tube.
4. Operating of the tube at lower voltages impairs the luminance and resolution, and could impair convergence.
5. The short-term average anode current should be limited by circuitry to 1500 μA.
6. During adjustment on the production line max. 1500 V is permitted.
7. For maximum cathode life it is recommended that the heater supply be designed for 6,3 V at zero beam current.

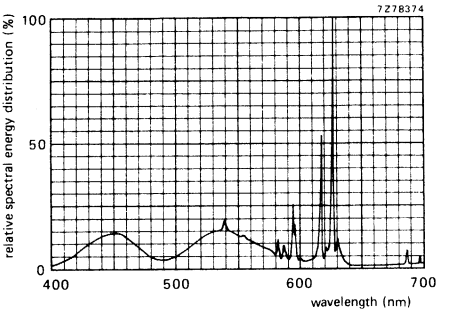

Simultaneously excitation of red, green and blue phosphor, measured in a tube, to produce white of x = 0,313, y = 0,329. Exact shape of the peaks depends on the resolution of the measuring apparatus.

Colour co-ordinates:	x	y
red	0,635	0,340
green	0,315	0,600
blue	0,150	0,060

110° FLAT SQUARE COLOUR PICTURE TUBE ASSEMBLY

- Factory preset tube/coil assembly
- Self-converging and north-south raster correction free
- 51 cm, 110° colour picture tube A51EAK01X
- Double saddle deflection unit AT6020

QUICK REFERENCE DATA

Deflection angle	110°
Minimum useful screen diagonal	51 cm
Overall length	36 cm
Neck diameter	29,1 mm

MECHANICAL DATA

Dimensions in mm

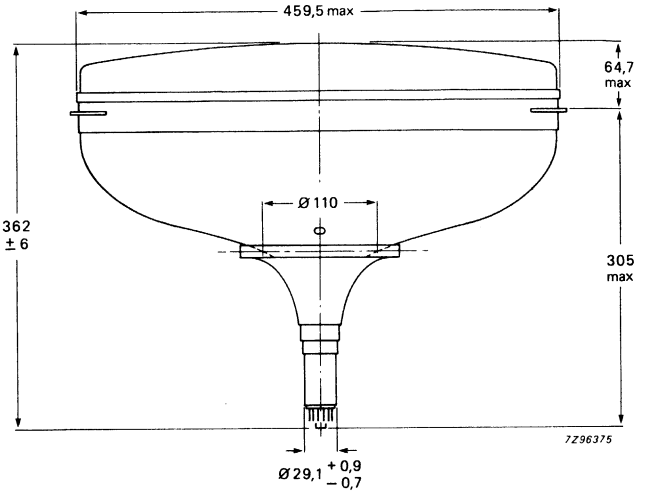

Net mass of tube assembly: 16 kg

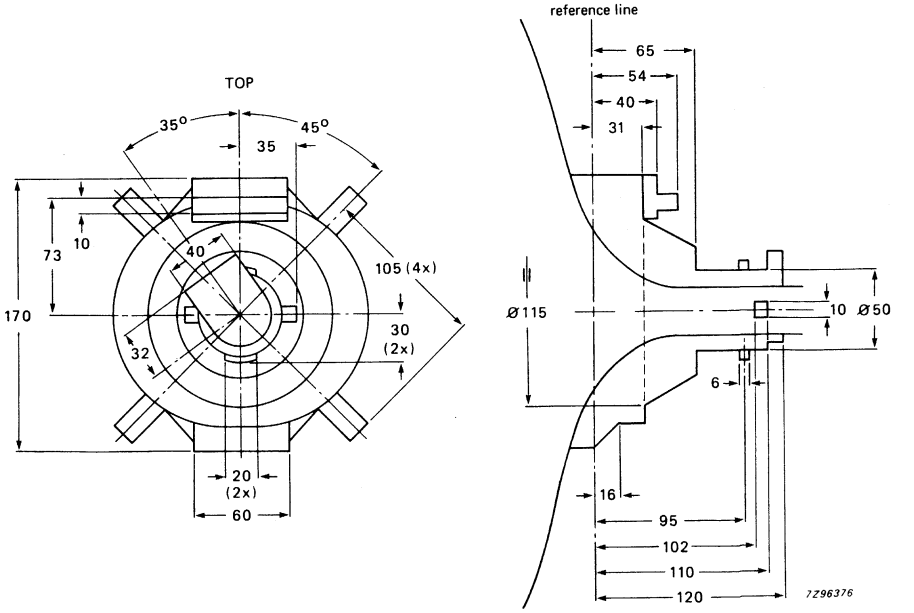

Yoke clearance.

ELECTRICAL DATA OF DEFLECTION UNIT

Line coils	parallel connected
Inductance at 1 V (r.m.s.), 1 kHz	1,85 mH
Resistance at 25 °C	1,85 Ω
Magnetic flux	7,6 mWb ± 5%
Line deflection current, edge to edge, at 25 kV	4,1 A (p-p)
Field coils	series connected
Inductance at 1 V (r.m.s.), 1 kHz	11 mH
Resistance at 25 °C	6,5 Ω
Field deflection current, edge to edge, at 25 kV	1,7 A (p-p)

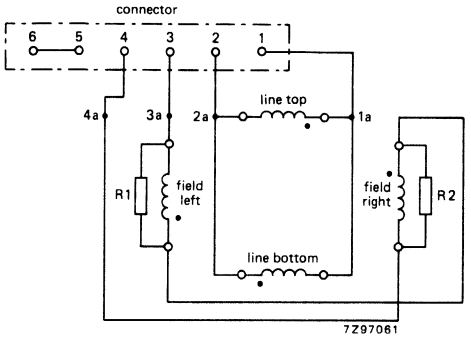

Electrical diagram.
The beginning of the windings is indicated with ●.
R1 = R2 = 100 Ω, 0,25 W.
Matching Stocko connector MKF 806-1-0-606.

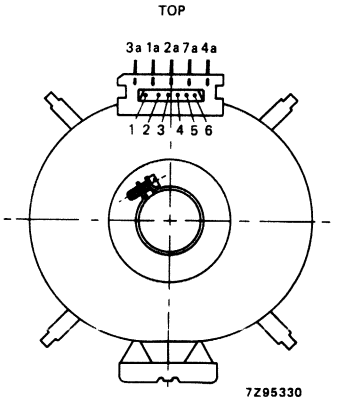

Terminal location.

DEVELOPMENT DATA

110° FLAT SQUARE COLOUR PICTURE TUBE ASSEMBLY

- Factory preset tube/coil assembly
- Self-converging and north-south raster correction free
- 51 cm, 110° colour picture tube A51EAK01X
- Double saddle deflection unit AT6020

QUICK REFERENCE DATA

Deflection angle	110°
Minimum useful screen diagonal	51 cm
Overall length	36 cm
Neck diameter	29,1 mm

MECHANICAL DATA

Dimensions in mm

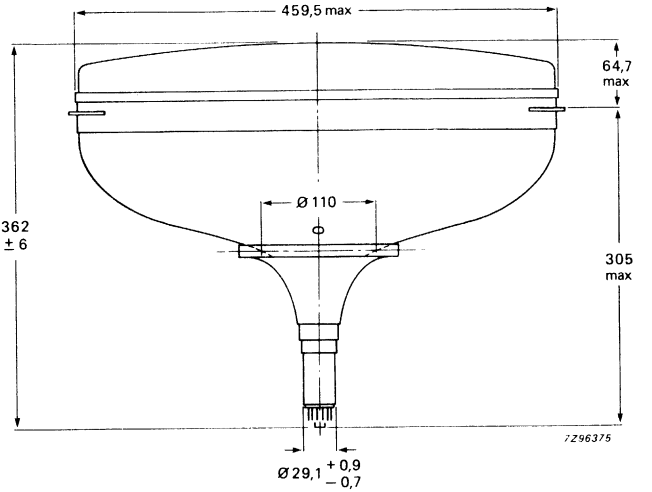

Net mass of tube assembly: 16 kg.

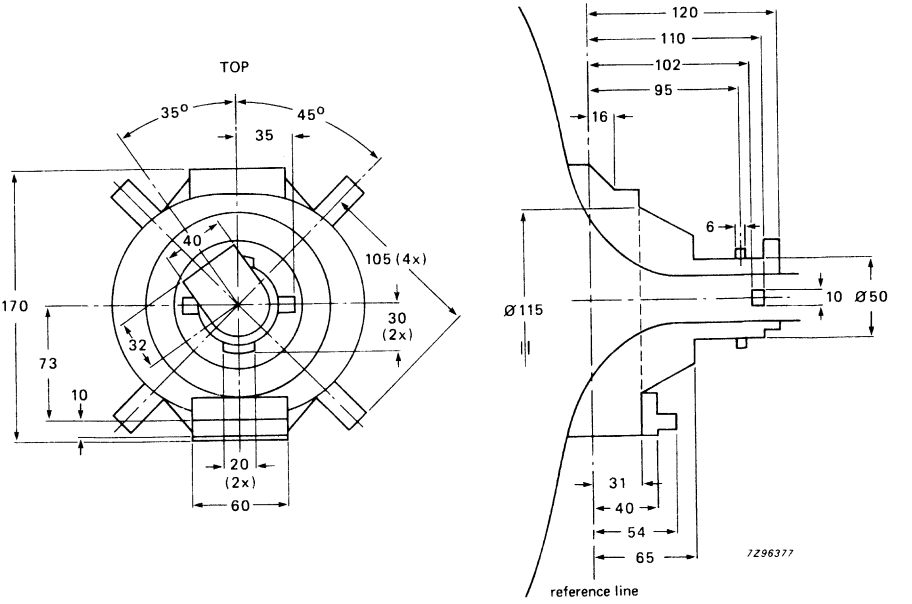

Yoke clearance.

ELECTRICAL DATA OF DEFLECTION UNIT

Line coils	parallel connected
Inductance at 1 V (r.m.s.), 1 kHz	1,85 mH
Resistance at 25 °C	1,85 Ω
Magnetic flux	7,6 mWb ± 5%
Line deflection current, edge to edge, at 25 kV	4,1 A (p-p)
Field coils	series connected
Inductance at 1 V (r.m.s.), 1 kHz	11 mH
Resistance at 25 °C	6,5 Ω
Field deflection current, edge to edge, at 25 kV	1,7 A (p-p)

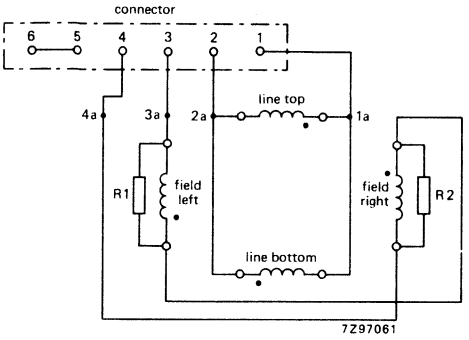

Electrical diagram.
The beginning of the windings is indicated with ●.
R1 = R2 = 100 Ω, 0,25 W.
Matching Stocko connector MKF806-1-0-606.

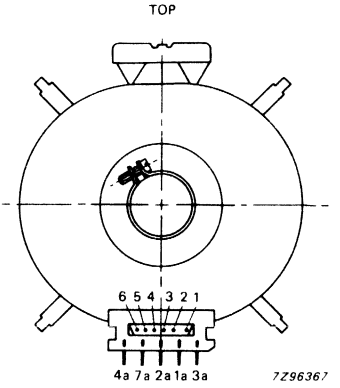

Terminal location.

DEVELOPMENT DATA

FLAT SQUARE Hi-Bri COLOUR PICTURE TUBES

- Flat and square screen
- 90° deflection
- In-line, hi-bi potential A R T* gun
- 29,1 mm neck diameter
- Mask with corner suspension
- Hi-Bri technology
- Pigmented phosphors
- Quick-heating low-power cathodes
- Soft flash
- Slotted shadow mask optimized for minimum moiré at 625 lines system
- Internal magnetic shield
- Internal multipole
- Reinforced envelope for push-through mounting
- The tube is supplied with a matched hybrid saddle toroidal deflection unit of the AT6035 series; it forms a self-converging and raster correction free assembly

QUICK REFERENCE DATA

Deflection angle	90°
Minimum useful screen diagonal	51 cm
Overall length	444 mm
Neck diameter	29,1 mm
Heating	6,3 V, 310 mA
Focusing voltage	31% of anode voltage

Type A51EAL10X is identical to type A51EAL00X, except for the base: JEDEC B8-274; see the relevant paragraph of "Mechanical Data".

Type A51EAL20X is identical to type A51EAL00X, except for the rimband, see dimensional drawings of "Mechanical Data".

Type A51EAL30X is identical to type A51EAL00X, except for the light transmission of face glass at centre: 52%.

* Aberration Reducing Triode.

ELECTRON-OPTICAL DATA

Electron gun system		unitized triple-aperture electrodes; aberration reducing triode
Focusing method		electrostatic
Focus lens		hi-bi-potential
Deflection method		magnetic
Deflection angles		
diagonal		approx. 90°
horizontal		approx. 78°
vertical		approx. 60°

ELECTRICAL DATA

capacitances		
anode to external		max. 2200 pF
conductive coating including rimband	$C_a(m + m')$	min. 1600 pF
grid 1 to all other electrodes	C_{g1}	17 pF
cathode of each gun to all other electrodes	C_{kR}, C_{kG}, C_{kB}	5 pF
focusing electrode to all other electrodes	C_{g3}	6 pF
Heating		indirect by a.c. or d.c.
heater voltage	V_f	6,3 V
heater current	I_f	310 mA

OPTICAL DATA

Screen		metal-backed vertical phosphor stripes, phosphor lines follow glass contour
→ Screen finish		high gloss
Useful screen dimensions		
diagonal		min. 508,0 mm
horizontal axis		min. 411,4 mm
vertical axis		min. 310,8 mm
area		min. 1265 cm^2
Positional accuracy of the screen with respect to the glass contour		see Figure on the next page
Phosphors		
red		pigmented europium activated rare earth
green		sulphide type
blue		pigmented sulphide type
Centre-to-centre distance of vertical identical colour phosphor stripes, at screen centre		approx. 0,75 mm
Light transmission of face glass at centre		
A51EAL00X, A51EAL10X, A51EAL20X		64,4%
A51EAL30X		52,3%
Luminance at the centre of the screen		
A51EAL00X, A51EAL10X, A51EAL20X	L	165 cd/m^2 *
A51EAL30X	L	130 cd/m^2 *

* Tube settings adjusted to produce white D (x = 0,313, y = 0,329), focused raster, current density 0,4 $\mu A/cm^2$.

A = 171,7 mm
B = 223,7 mm
C = 115,6 mm
D = 173,9 mm
E = 23,5 mm

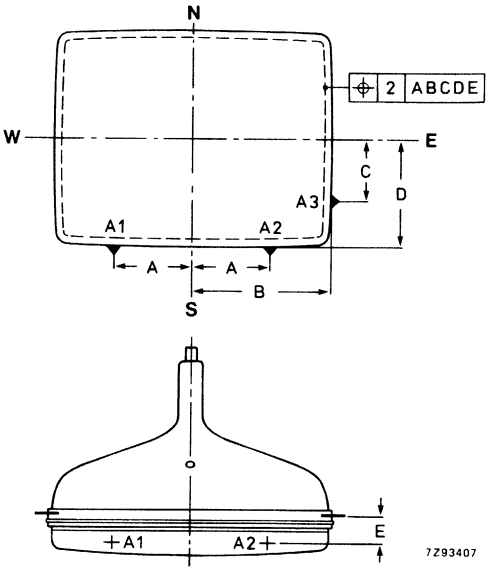

DEVELOPMENT DATA

MECHANICAL DATA (see also the figures on the following pages)

Overall length	
A51EAL00X, A51EAL20X, A51EAL30X	443,7 ± 5 mm
A51EAL10X	448,3 ± 5 mm
Neck diameter	$29{,}1\ ^{+\ 1{,}4}_{-\ 0{,}7}$ mm*
Bulb dimensions	
diagonal	max. 546,1 mm
width	max. 455,6 mm
height	max. 359,6 mm
Base	
A51EAL00X, A51EAL20X, A51EAL30X	JEDEC B10-277
A51EAL10X	JEDEC B 8-274
Anode contact	small cavity contact J1-21, IEC 67-III-2
Mounting position	anode contact on top

Handling

During shipment and handling the tube should not be subjected to accelerations greater than 35g in any direction.

* In the region of 78,5 mm from the neck end, the maximum diameter is 30 mm.

MECHANICAL DATA (continued)

Dimensions in mm

Notes are given after the drawings
(Applicable to A51EAL00X, A51EAL10X, A51EAL30X)

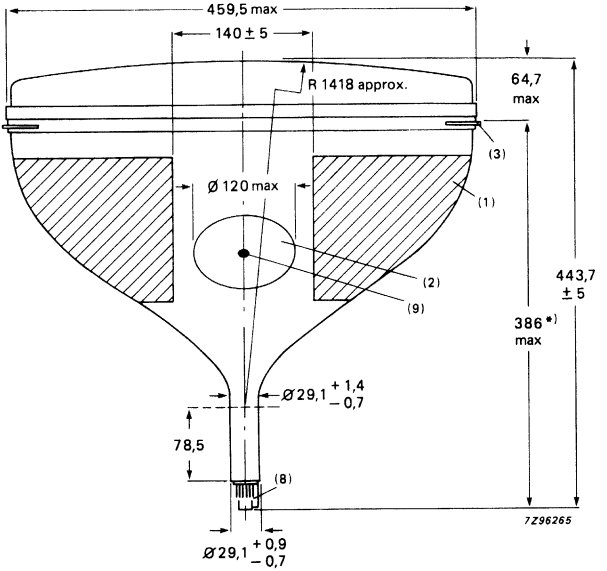

Note: Tube A51EAL10X has an overall length of 448,3 ±5 mm.
* For A51EAL10X : 390,6 max.

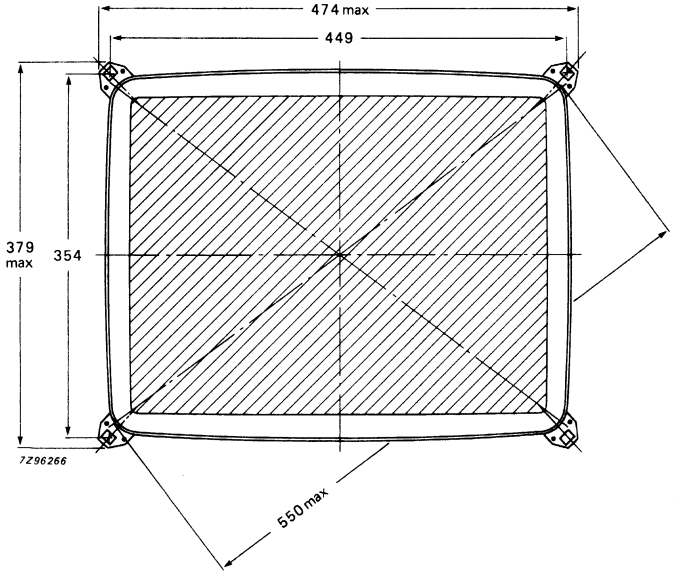

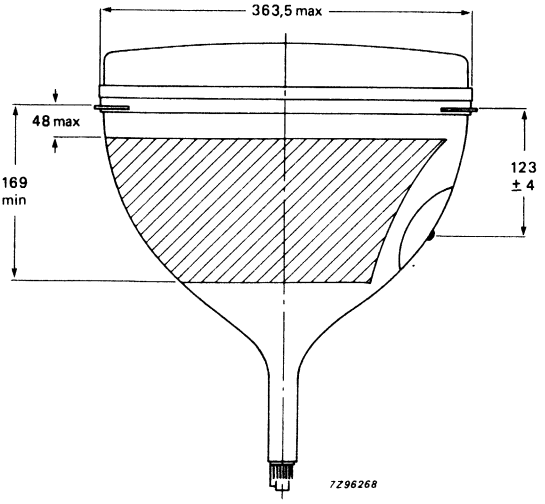
363,5 max
48 max
169
min
123
± 4
7Z96268

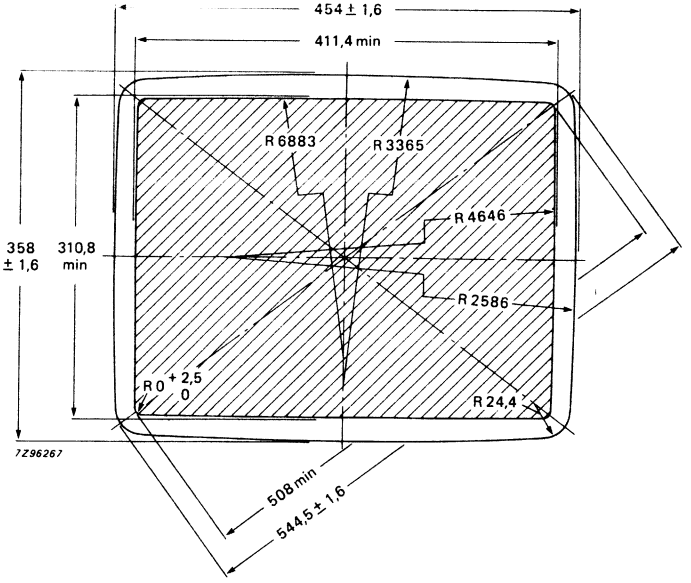
454 ± 1,6
411,4 min
R 6883
R 3365
R 4646
358
± 1,6
310,8
min
R 2586
R 0 + 2,5
0
R 24,4
7Z96267
508 min
544,5 ± 1,6

MECHANICAL DATA (continued)

(Applicable to A51EAL20X)

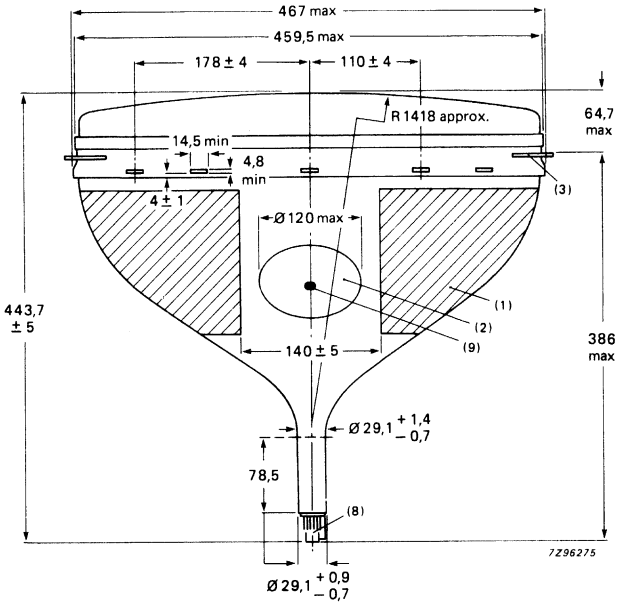

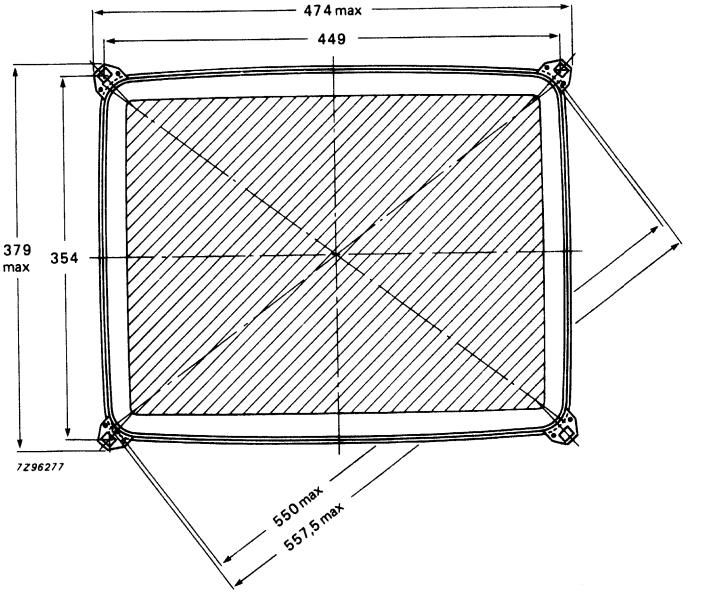

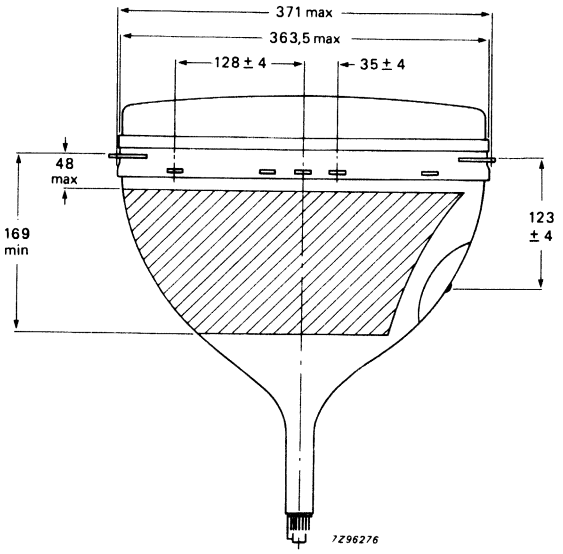
371 max
363,5 max
128 ± 4
35 ± 4
48
max
169
min
123
± 4
7Z96276

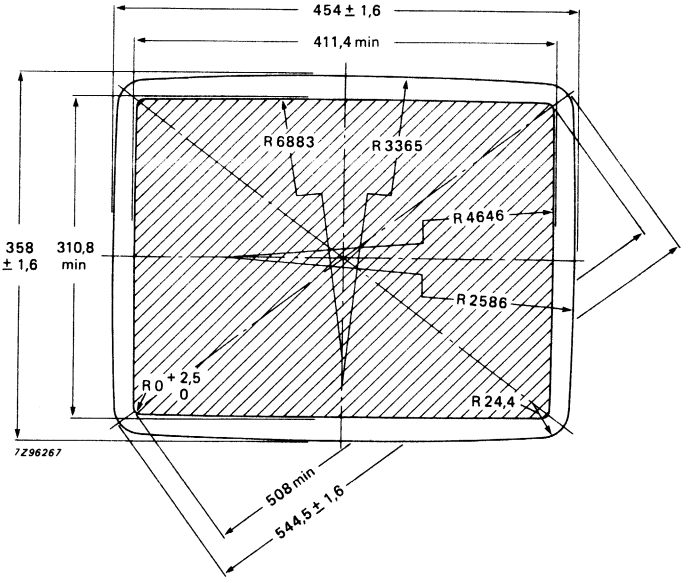
454 ± 1,6
411,4 min
R 6883
R 3365
R 4646
R 2586
R 24,4
R 0 + 2,5 0
358
± 1,6
310,8
min
508 min
544,5 ± 1,6
7Z96267

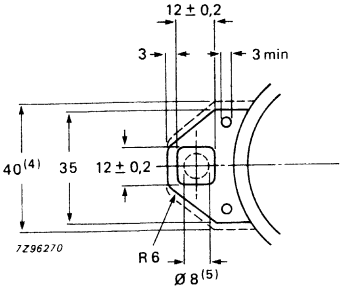

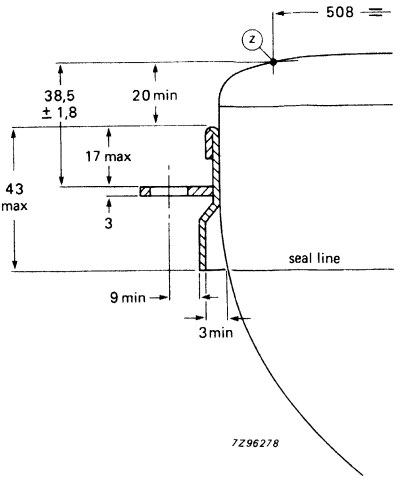

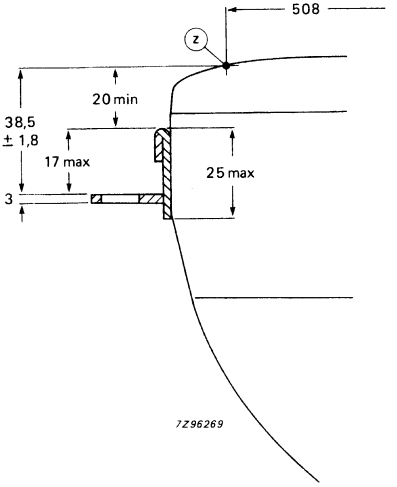

(Applicable to A51EAL20X)

(Applicable to A51EAL00X, A51EAL10X, A51EAL30X)

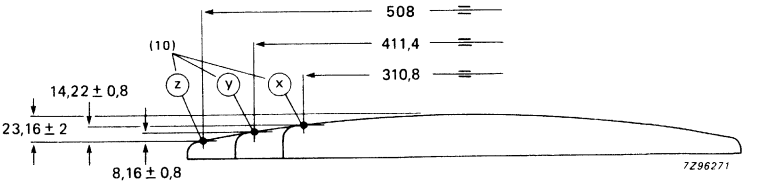

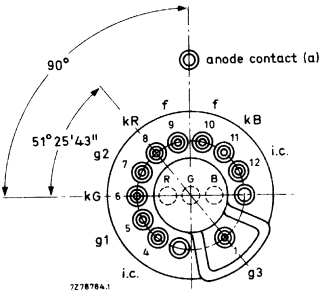

i.c. = internally connected
(not to be used)

Notes to outline drawings on the preceding pages

1. Configuration of outer conductive coating may be different but will contain the contact area as shown in the drawing.
2. To clean this area, wipe only with a soft lintless cloth.
3. The displacement of any lug with respect to the plane through the three other lugs is max. 1,3 mm. This deviation is incorporated in the tolerance of ± 1,8 mm.
4. Minimum space to be reserved for mounting lug.
5. The position of the mounting screw in the cabinet must be within a circle of 8 mm diameter drawn around the true geometrical positions, i.e. the corners of a rectangle of 354 x 449 mm.
6. Not applicable.
7. Not applicable.
8. The socket for this base should not be rigidly mounted; it should have flexible leads and be allowed to move freely. After mounting of the tube in the cabinet note that the position of the base can fall within a circle, having a diameter of max. 50 mm (1,968 in), concentric with an imaginary tube axis.
9. Small cavity contact J1-21, IEC 67-III-2.
10. The X, Y and Z reference points are located on the outside surface of the face plate at the intersection of the minor, major and diagonal screen axis respectively, with the minimum published screen.

Sagittal heights with reference to screen centre at the edge of the minimum useful screen

coordinates x mm	coordinates y mm	sagittal height mm
0*	155,4	9,0
20	155,4	9,1
40	155,3	9,4
60	155,1	10,1
80	154,9	11,0
100	154,7	12,2
120	154,4	13,7
140	153,9	15,4
160	153,5	17,5
180	153,0	19,9
200	152,5	22,7
203,2**	152,4	23,2
203,3	150	22,9
203,6	140	21,8
204,2	120	19,9
204,6	100	18,4
205,0	80	17,2
205,3	60	16,3
205,5	40	15,6
205,7	20	15,8
205,7▲	0	15,0

* Point (x).
** Diagonal.
▲ Point (y).

10-pin base; JEDEC B10-277

(Applicable to A51EAL00X, A51EAL20X and A51EAL30X)

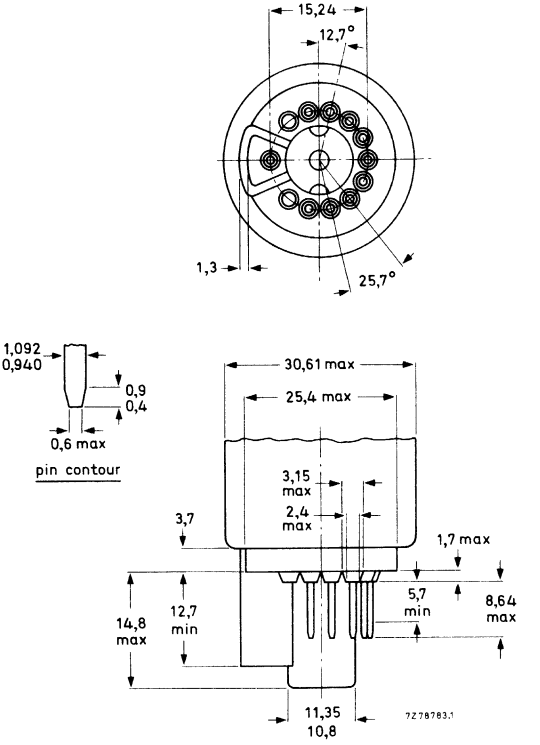

DEVELOPMENT DATA

Base JEDEC B8-274

(Applicable to A51EAL10X)

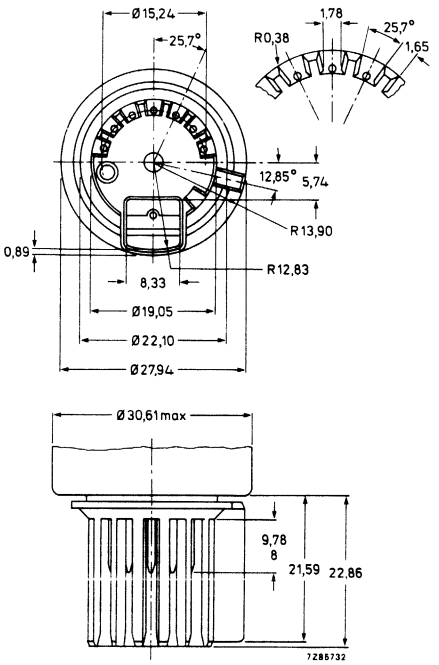

Cavity cap JEDEC J1-21, IEC 67-III-2

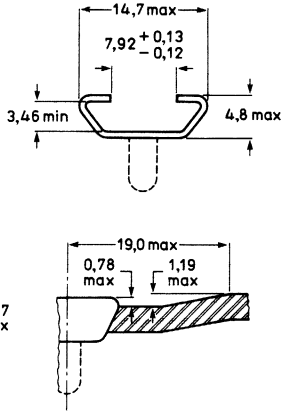

Maximum cone contour

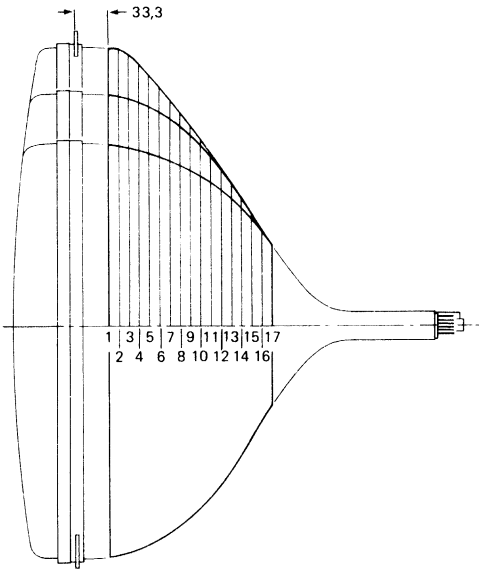

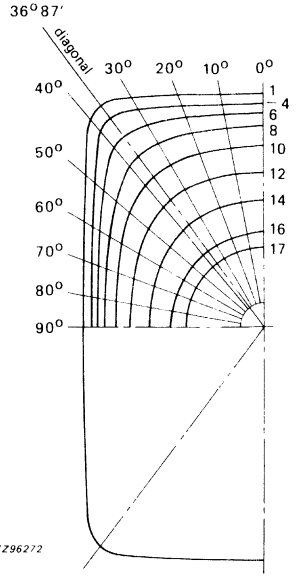

section	nom. distance from section 1	max. distance from centre										
		0°	10°	20°	30°	diag.	40°	50°	60°	70°	80°	90°
1	0	225,7	228,9	239,1	257,6	271,8	267,2	227,9	203,1	187,9	179,6	177,0
2	10	224,6	227,7	237,7	255,9	270,0	265,3	226,7	201,9	186,8	178,6	175,9
3	20	221,8	224,8	234,3	251,1	264,3	259,6	222,9	198,9	184,2	176,1	173,5
4	30	218,1	220,9	229,6	244,5	254,7	250,6	217,9	195,1	180,9	173,1	170,6
5	40	213,8	216,4	224,1	236,5	243,1	239,6	212,0	190,9	177,3	169,9	167,5
6	50	208,7	211,0	217,7	227,5	231,3	228,4	205,6	186,3	173,6	166,5	164,2
7	60	202,6	204,5	210,0	217,5	219,5	217,0	198,5	181,0	169,3	162,6	160,5
8	70	195,1	196,8	201,3	206,9	207,6	205,4	190,3	175,1	164,4	158,3	156,3
9	80	186,2	187,6	191,4	195,6	195,4	193,5	181,3	168,4	158,9	153,3	151,5
10	90	175,6	176,9	180,1	183,3	182,8	181,1	171,4	160,7	152,5	147,6	146,0
11	100	163,6	164,6	167,4	169,9	169,2	167,9	160,4	151,9	145,2	141,0	139,6
12	110	150,3	151,3	153,8	155,7	154,7	153,6	147,9	141,7	136,6	133,4	132,3
13	120	136,4	137.3	139,3	140,4	139,5	138,6	134,5	130,3	126,8	124,6	123,9
14	130	122,1	122,8	124,4	124,9	124,0	123,3	120,7	118,2	116,1	114,7	114,3
15	140	107,5	107,7	108,2	108,6	108,4	108,2	107,0	105,7	104,5	103,8	103,5
16	150	92,6	92,3	92,3	92,6	92,8	92,9	92,9	92,6	92,1	91,6	91,4
17	159,5	78,1	78,1	78,1	78,1	78,1	78,1	78,1	78,1	78,1	78,1	78,1

TYPICAL OPERATING CONDITIONS

The voltages are specified with respect to grid 1.

Anode voltage	$V_{a,g4}$	25 kV
Grid 3 (focusing electrode) voltage	V_{g3}	7,25 to 8,25 kV
Grid 2 voltage for a spot cut-off voltage V_k = 130 V	V_{g2}	see below
Heater voltage under operating conditions	V_f	6,3 V

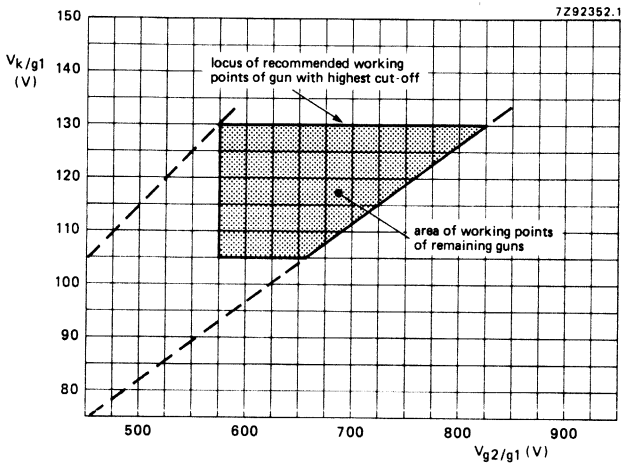

Spot cut-off design chart.

Grid 2 voltage (V_{g2}) adjusted for highest gun spot cut-off voltage V_k = 130 V.

Remaining guns adjusted for spot cut-off by means of cathode voltage

V_{g2} range 575 to 825 V;

V_k range 105 to 130 V.

Adjustment procedure:

Set the cathode voltage (V_k) for each gun at 130 V; increase the grid 2 voltage (V_{g2}) from approx. 550 V to the value at which one of the colours become just visible. Now decrease the cathode voltage of the remaining guns so that the other colours also become visible.

DEVELOPMENT DATA

EQUIPMENT DESIGN VALUES

The values are valid for anode voltages between 20 and 27,5 kV.
The voltages are specified with respect to grid 1.

Grid 3 (focusing electrode) voltage	V_{g3}	29 to 33% of anode voltage	
Grid 2 voltage and cathode voltage for visual extinction of focused spot	V_{g2} and V_k	see cut-off design chart	
Difference in cut-off voltages between guns in any tube	ΔV_k	lowest value > 80% of highest value	
Heater voltage	V_f	6,3 V at zero beam current	
Video drive characteristics		see graphs*	
Grid 3 (focusing electrode) current	I_{g3}	−2 to + 2 μA	
Grid 2 current	I_{g2}	−2 to + 2 μA	
Grid 1 current under cut-off conditions	I_{g1}	−2 to + 2 μA	
To produce white of 6500K + 7 M.P.C.D. (CIE co-ordinates x = 0,313, y = 0,329)			
Percentage of the total anode curernt supplied by each gun (typical)			
red gun		38,3%	
green gun		35,8%	
blue gun		25,9%	
Ratio of anode currents			
red gun to green gun		min.	0,8
		average	1,1
		max.	1,4
red gun to blue gun		min.	1,1
		average	1,5
		max.	1,9
blue gun to green gun		min.	0,5
		average	0,7
		max.	0,9
Insulation resistance between each cathode and grid 1 and heater		min.	100 MΩ

* For optimum picture performance it is recommended that the cathodes are not driven below + 1 V.

DEVELOPMENT DATA

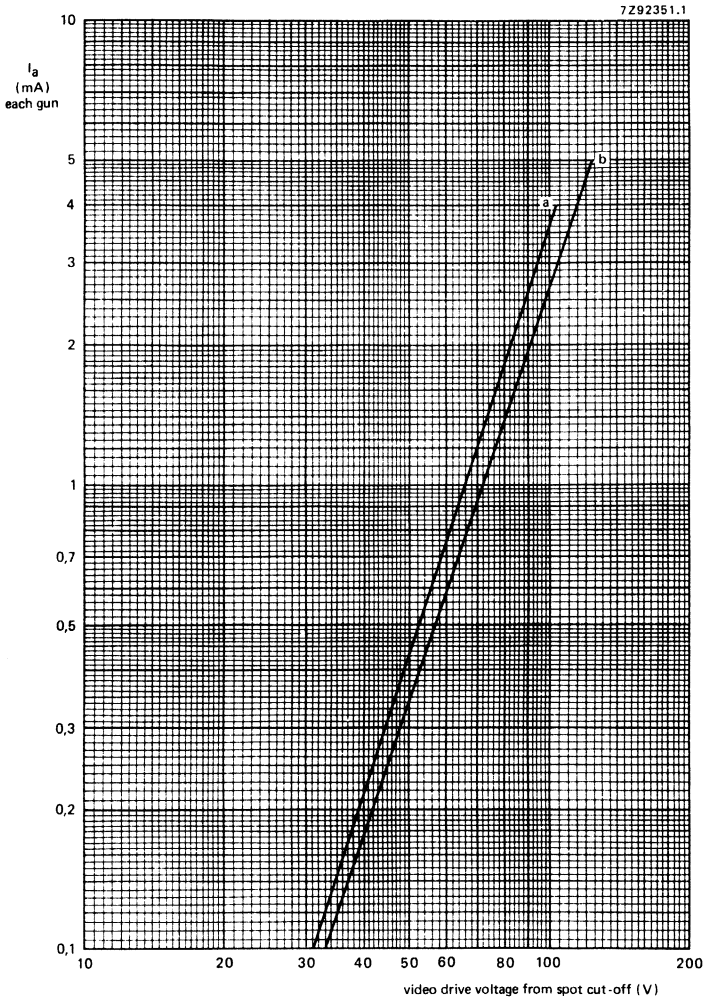

Typical cathode drive characteristic.

V_f = 6,3 V;

$V_{a,g4}$ = 25 kV;

V_{g3} adjusted for focus;

V_{g2} (each gun) adjusted to provide spot cut-off for V_k = 105 V (curve a) and V_k = 130 V (curve b).

LIMITING VALUES (Design maximum rating system unless otherwise stated)

The voltages are specified with respect to grid 1.

					notes
Anode voltage	$V_{a,g4}$	max.	27,5	kV	1, 2, 3
		min.	20	kV	1, 4
Long-term average current for three guns	I_a	max.	1000	μA	5
Grid 3 (focusing electrode) voltage	V_{g3}	max.	11	kV	
Grid 2 voltage, peak	V_{g2p}	max.	1200	V	6
Cathode voltage					
positive	V_k	max.	400	V	
positive operating cut-off	V_k	max.	200	V	
negative	$-V_k$	max.	0	V	
negative peak	$-V_{kp}$	max.	2	V	
Cathode to heater voltage					
positive	V_{kf}	max.	250	V	
positive peak	V_{kfp}	max.	300	V	1
negative	$-V_{kf}$	max.	135	V	
negative peak	$-V_{kfp}$	max.	180	V	1
Heater voltage	V_f	6,3 V	+5 / −10	%	1, 7

LIMITING CIRCUIT VALUES

Grid 3 circuit resistance	R_{g3}	max.	70	MΩ	
Grid 1 to cathode circuit resistance (each gun)	R_{g1k}	max.	0,75	MΩ	

Notes

1. Absolute maximum rating system.
2. The X-ray dose rate remains below the acceptable value of 36 pA/kg (0,5 mR/h), measured with ionization chamber when the tube is used within its limiting values.
3. During adjustment on the production line this value is likely to be surpassed considerably. It is therefore strongly recommended to first make the necessary adjustments for normal operation without picture tube.
4. Operation of the tube at lower voltages impairs the luminance and resolution, and could impair convergence.
5. The short-term average anode current should be limited by circuitry to 1500 μA.
6. During adjustment on the production line max. 1500 V is permitted.
7. For maximum cathode life it is recommended that the heater supply be designed for 6,3 V at zero beam current.

FLASHOVER PROTECTION

With the high voltage used with this tube (max. 27,5 kV) internal flashovers may occur. As a result of the Soft-Flash technology these flashover currents are limited to approx. 60 A offering higher set reliability, optimum circuit protection and component savings.
Primary protective circuitry using properly grounded spark gaps and series isolation resistors (preferably carbon composition) is still necessary to prevent tube damage. The spark gaps should be connected to all picture tube electrodes at the socket according to the figure below; they are not required on the heater pins. No other connections between the outer conductive coating and the chassis are permissible.
The spark gaps should be designed for a breakdown voltage at the focusing electrode (g3) of 11,5 kV (1,5 x V_{g3} max. at $V_{a,g4}$ = 25 kV), and at the other electrodes of 1,5 to 2 kV.
The values of the series isolation resistors should be as high as possible (min. 1,5 kΩ) without causing deterioration of the circuit performance. The resistors should be able to withstand an instantaneous surge of 20 kV for the focusing circuit and 12 kV for the remaining circuits without arcing.
Additional information is available on request.

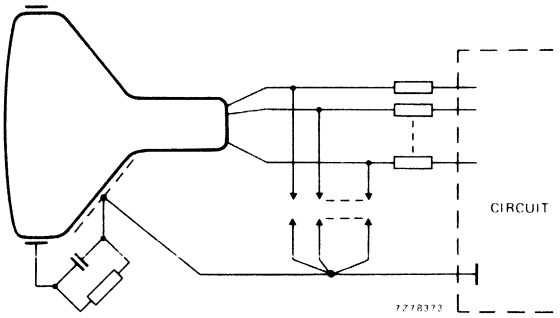

BEAM CORRECTIONS

Maximum centring error in any direction after colour purity, static convergence, and horizontal centre line correction, measured with deflection coils in nominal position	4 mm

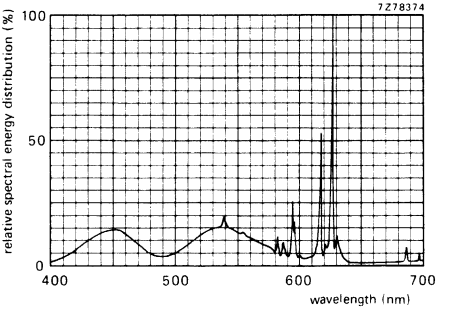

Simultaneous excitation of red, green and blue phosphor, measured in a tube, to produce white of x = 0,313, y = 0,329. Exact shape of the peaks depends on the resolution of the measuring apparatus.

Colour co-ordinates:	x	y
red	0,635	0,340
green	0,315	0,600
blue	0,150	0,060

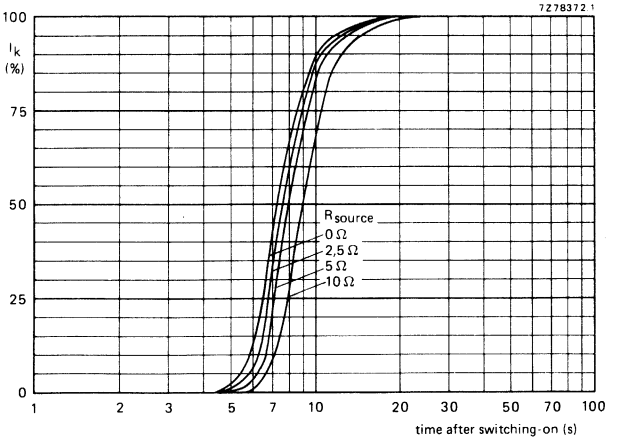

Cathode heating time after switching on, measured under typical operating conditions.

DEGAUSSING

The picture tube has an internal magnetic shield. This shield and the shadow mask with its suspension system may be provided with an automatic degaussing system, consisting of two coils covering top and bottom cone parts, or one large coil.

For proper degaussing an initial magnetomotive force (m.m.f.) of 300 ampere-turns* is required in each of the coils. This m.m.f. has to be gradually decreased by appropriate degaussing circuitry. In the steady state, no significant m.m.f. should remain in the coils ($\leqslant$ 0,3 ampere-turns**).

If single-phase power rectification is employed in the t.v. circuitry, provision should be included to prevent asymmetric distortion of the a.c. voltage applied to the degaussing circuit due to high d.c. inrush currents.

Examples of a double-coil and of a single-coil system are given below.

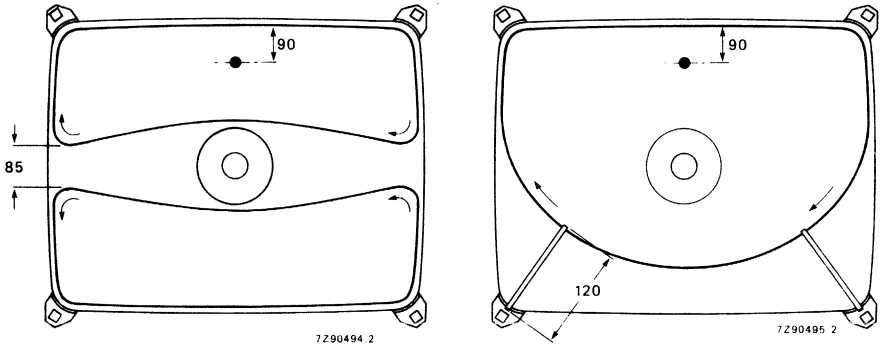

Position of degaussing coils on the picture tube.

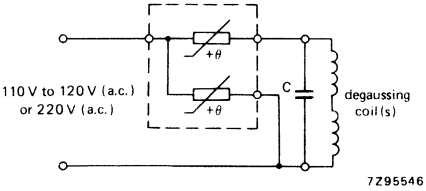

Degaussing circuit using dual PTC thermistor 2322 662 98009; C = 100 nF, for double-coil system, optional for single-coil system.

Data of degaussing coil

	double-coil system	single-coil system
Circumference	125 cm	139 cm
Number of turns	60	140
Copper-wire diameter	0,4 mm	0,4 mm
Aluminium-wire diameter	0,5 mm	0,5 mm
Resistance	22 Ω (two coils in series)	27 Ω

* 300 ampere-turns for double-coil system; 700 ampere-turns for single-coil system.

** $\leqslant$ 0,3 ampere-turns for double-coil system; $\leqslant$ 0,6 ampere-turns for single-coil system.

90° FLAT SQUARE COLOUR PICTURE TUBE ASSEMBLIES

- Factory preset tube/coil assemblies
- Self-converging and raster correction free
- 51 cm, 90° colour picture tube A51EAL . . X
- Hybrid saddle toroidal deflection unit of the AT6035 series

QUICK REFERENCE DATA

Deflection angle	90°
Minimum useful screen diagonal	51 cm
Overall length	444 mm
Neck diameter	29,1 mm

AVAILABLE ASSEMBLIES

assembly type	assembly components
A51EAL00X01	tube A51EAL00X + deflection unit AT6035/04
A51EAL00X02	tube A51EAL00X + deflection unit AT6035/02
A51EAL00X03	tube A51EAL00X + deflection unit AT6035/03
A51EAL00X11	tube A51EAL00X + deflection unit AT6035/11
A51EAL10X01	tube A51EAL10X + deflection unit AT6035/04
A51EAL10X30	tube A51EAL10X + deflection unit AT6035/30
A51EAL20X01	tube A51EAL20X + deflection unit AT6035/04
A51EAL30X01	tube A51EAL30X + deflection unit AT6035/04

MECHANICAL DATA

Dimensions in mm

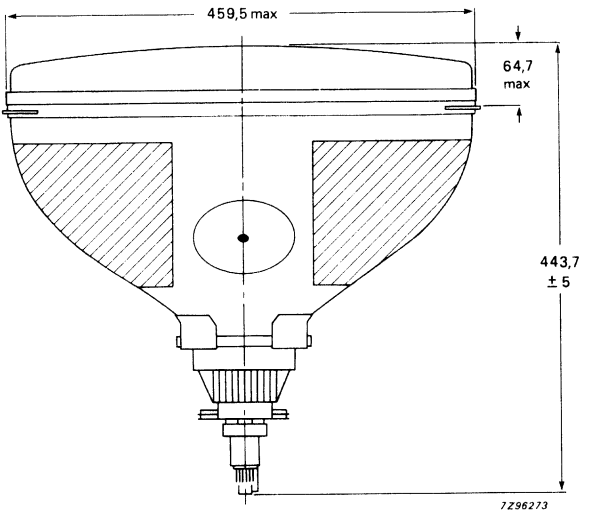

Assemblies A51EAL00X. ., A51EAL10X. . and A51EAL30X. .
Assembly A51EAL10X . . has an overall length of 448,3 ± 5 mm.

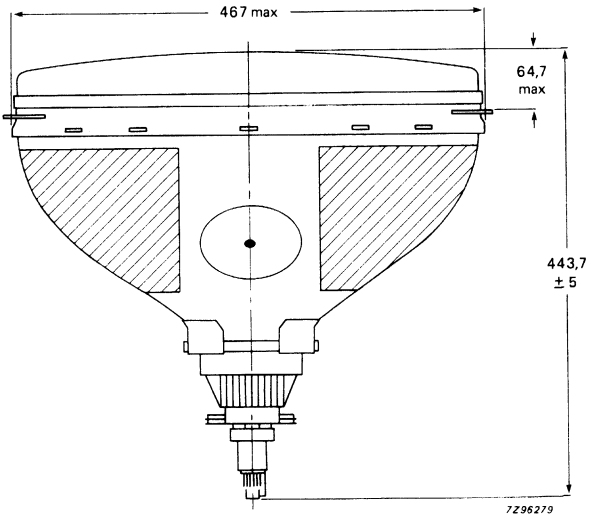

Assembly A51EAL20X. .

DEVELOPMENT DATA

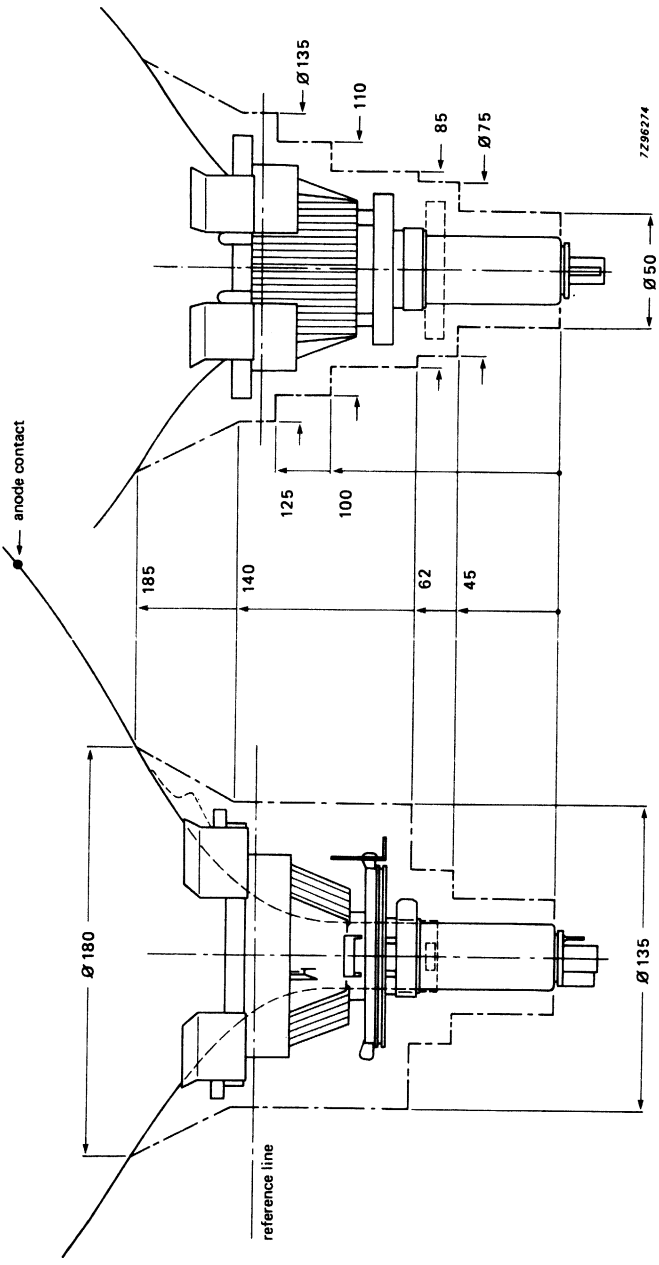

Yoke clearance.

ELECTRICAL DATA OF DEFLECTION UNITS

parameter	unit	deflection unit AT6035/ . .				
		04	02*	03**	11*	30▲
Line deflection coils						
inductance at 1 V (r.m.s.), 1 kHz	mH ± 4%	2,0	2,0	2,0	1,7	2,0
resistance at 25 °C	Ω ± 10%	2,35	2,35	2,35	2,00	2,35
magnetic flux	mWb ± 2,5%	5,70	5,70	5,70	5,25	5,70
Line deflection current, edge to edge, at 25 kV	A (p-p)	2,85	2,85	2,85	3,09	2,85
Field deflection coils						
inductance at 1 V (r.m.s.), 1 kHz	mH ± 10%	19,5	19,5	19,5	19,5	78
resistance at 25 °C	Ω ± 7%	9,7	9,7	9,7	9,7	38,8
Field deflection current, edge to edge, at 25 kV	A (p-p)	1,09	1,09	1,09	1,09	0,55

Cross-talk — a voltage of 10 V, 15625 Hz applied to the line coils causes no more than 0,2 V across the field coils (damping resistors included)

Insulation resistance at 1 kV (d.c.)
- between line and field coils > 500 MΩ
- between line coil and core clamp > 500 MΩ
- between field coil and core clamp > 10 MΩ

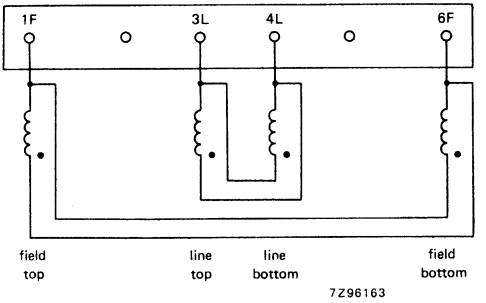

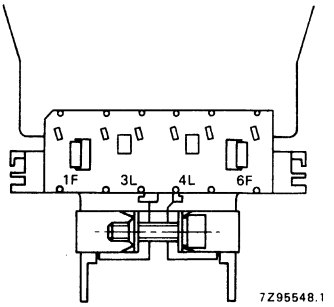

Connection diagram and top view of terminals of deflection unit AT6035/04. The beginning of the windings is indicated with ●.

* Deflection unit has been provided with a connector.
** Deflection unit has been provided with two connectors.
▲ Field coils in series.

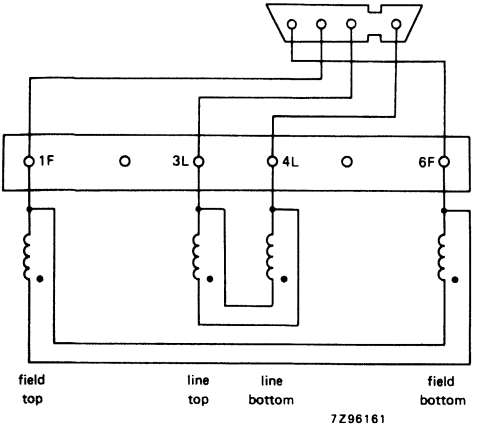

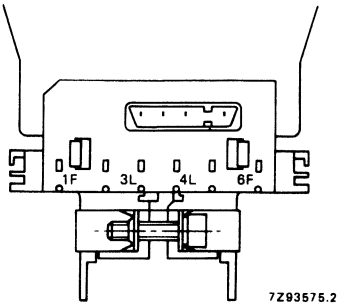

Connection diagram and top view of terminals of deflection units AT6035/02 and AT6035/11. The beginning of the windings is indicated with ●.

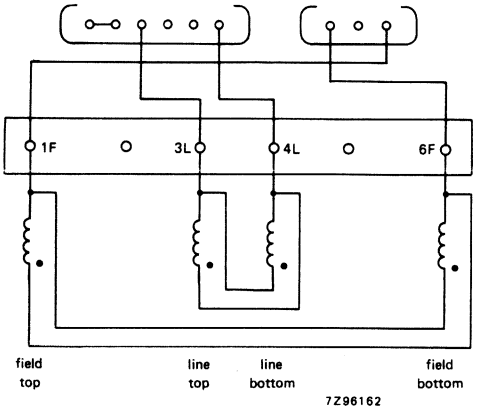

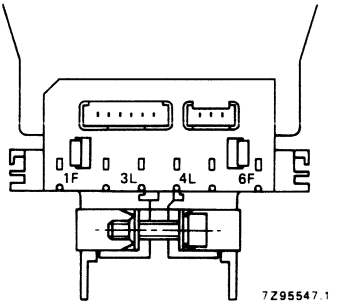

Connection diagram and top view of terminals of deflection unit AT6035/03. The beginning of the windings is indicated with ●.

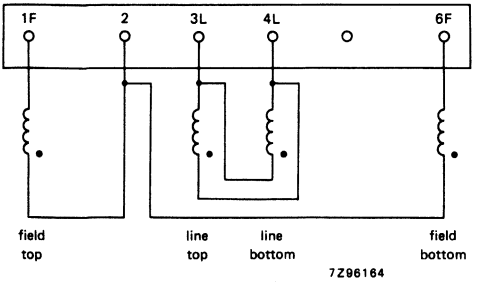

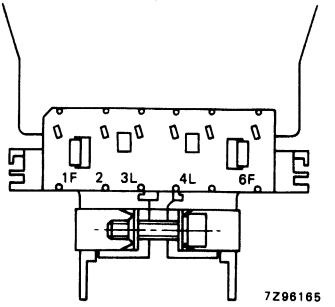

Connection diagram and top view of terminals of deflection units AT6035/30. The beginning of the windings is indicated with ●.

FLAT SQUARE Hi-Bri COLOUR PICTURE TUBE

- Flat and square screen
- 90° deflection
- In-line, hi-bi potential A R T* gun
- 22,5 mm neck diameter
- Shadow mask of NiFe alloy with low thermal expansion
- Hi-Bri technology
- Mask with corner suspension
- Pigmented phosphors
- Fine pitch over entire screen
- Quick-heating low-power cathodes
- Soft flash
- Slotted shadow mask optimized for minimum moiré at 625 lines system
- Internal magnetic shield
- Internal multipole
- Reinforced envelope for push-through mounting
- The tube is supplied with a deflection unit of the AT6040 series; it forms a self-converging and raster correction free assembly

QUICK REFERENCE DATA

Deflection angle	90°
Minimum useful screen diagonal	51 cm
Overall length	430 mm
Neck diameter	22,5 mm
Heating	6,3 V, 300 mA
Focusing voltage	31% of anode voltage

* Aberration Reducing Triode.

ELECTRON-OPTICAL DATA

Electron gun system		unitized triple-aperture electrodes; aberration reducing triode
Focusing method		electrostatic
Focus lens		hi-bi-potential
Deflection method		magnetic
Deflection angles		
diagonal		approx. 90°
horizontal		approx. 78°
vertical		approx. 60°

ELECTRICAL DATA

Capacitances		
anode to external conductive coating including rimband	$C_{a(m+m')}$	max. 2200 pF min. 1500 pF
grid 1 to all other electrodes	C_{g1}	15 pF
cathode of each gun to all other electrodes	C_{kR}, C_{kG}, C_{kB}	4 pF
focusing electrode to all other electrodes	C_{g3}	4 pF
Heating		indirect by a.c. or d.c.
heater voltage	V_f	6,3 V
heater current	I_f	300 mA

OPTICAL DATA

Screen		metal-backed vertical phosphor stripes; phosphor lines follow glass contour
Screen finish		high polish
Useful screen dimensions		
diagonal		min. 508,0 mm
horizontal axis		min. 406,4 mm
vertical axis		min. 304,8 mm
area		min. 1240 cm²
Positional accuracy of the screen with respect to the glass contour		see Figures on the next page
Phosphors		
red		pigmented europium activated rare earth
green		sulphide type
blue		pigmented sulphide type
Centre-to-centre distance of vertical identical colour phosphor stripes, at screen centre		0,60 mm
Light transmission of face glass at centre		64%
Luminance at the centre of the screen	L	160 cd/m² *

* Tube settings adjusted to produce white D (x = 0.313, y = 0,329), focused raster, current density 0,4 μA/cm².

A = 171,67 mm
B = 223,70 mm
C = 115,63 mm
D = 173,89 mm
E = 23,50 mm

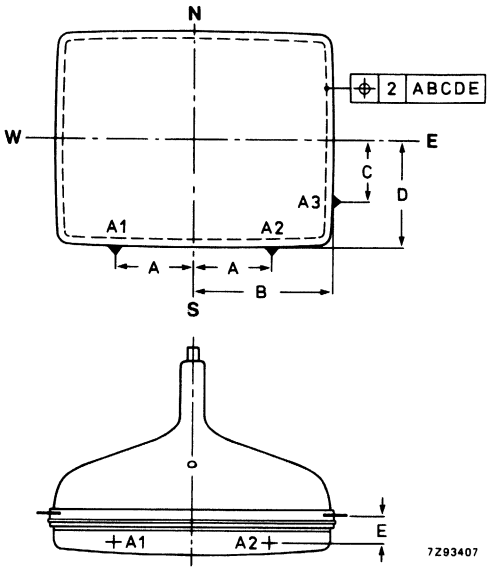

DEVELOPMENT DATA

MECHANICAL DATA (see also the figures on the following pages)

Overall length	430,4 ± 4,5 mm
Neck diameter	$22{,}5\ ^{+1{,}4}_{-0{,}7}$ mm*
Bulb dimensions	
diagonal	max. 546,1 mm
width	max. 455,6 mm
height	max. 359,6 mm
Base	JEDEC B8-288
Anode contact	small cavity contact J1-21, IEC 67-III-2
Mounting position	anode contact on top
Net mass	approx. 14 kg

Handling

During shipment and handling the tube should not be subjected to accelerations greater than 35g in any direction.

* In the region of 66 mm from the neck end, the maximum diameter is 23,2 mm.

MECHANICAL DATA (continued)

Notes are given after the drawings.

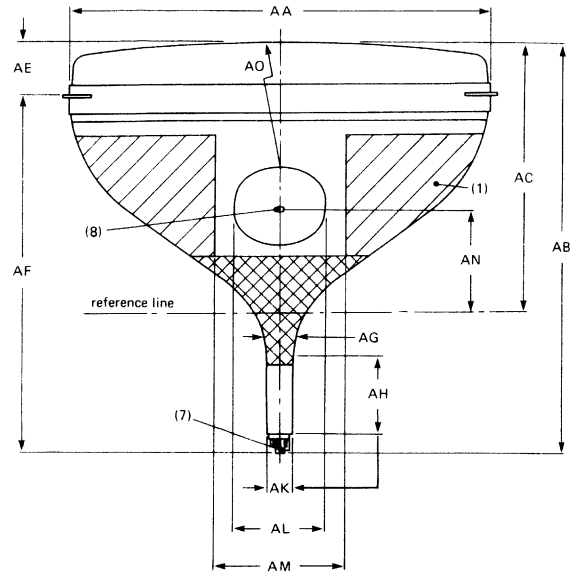

Dimensions in mm

AA	459,5 max
AB	430,4 ± 4,5
AC	288,6 ± 4,0
AE	64,7 max
AF	373 max
AG	$22{,}5\ ^{+1{,}4}_{-0{,}7}$
AH	66
AK	22,5 ± 0,7
AL	110 ± 10
AM	140 ± 3
AN	110 ± 4,5
AO	R1418 approx.

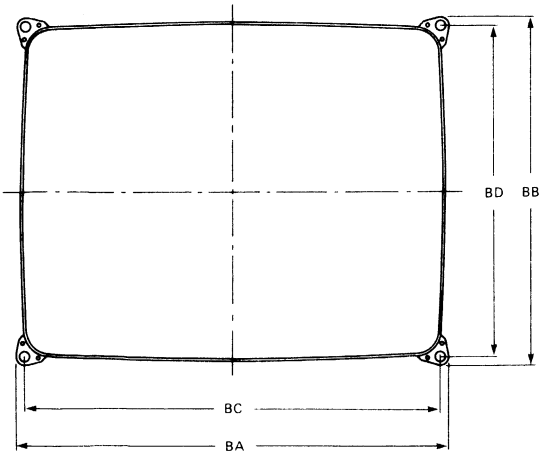

Dimensions in mm

BA	474 max
BB	379 max
BC	449
BD	354

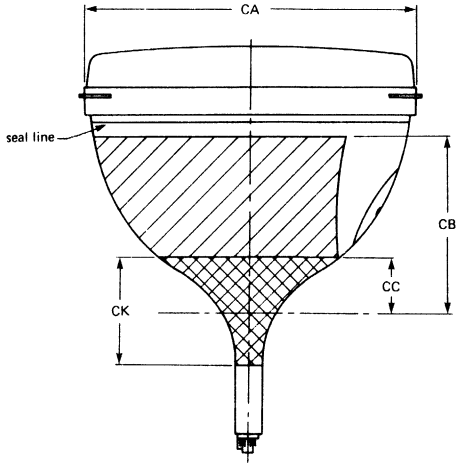

Dimensions in mm

CA	363,5 max
CB	188 min
CC	42 max
CG	550 max
CK	53 max

DEVELOPMENT DATA

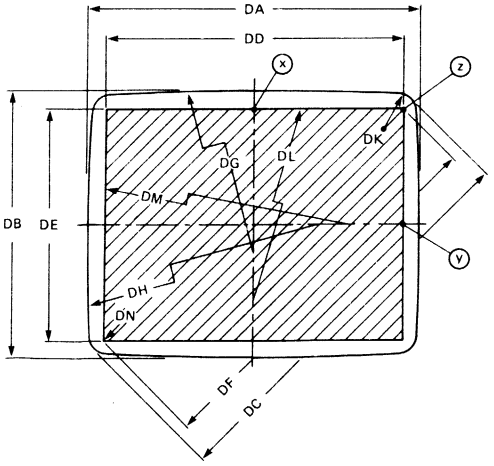

Dimensions in mm

DA	454,0 ± 1,6
DB	358,0 ± 1,6
DC	544,5 ± 1,6
DD	406,4 min
DE	304,8 min
DF	508,0 min
DG	R3365
DH	R2586
DK	R24,4
DL	R14000
DM	R8000
DN	R0

MECHANICAL DATA (continued)

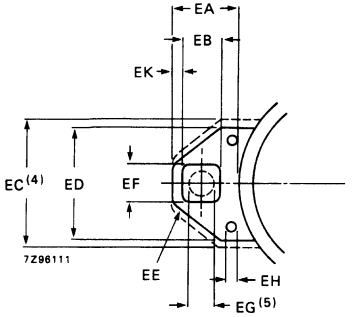

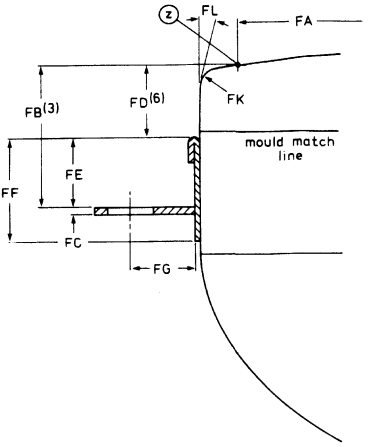

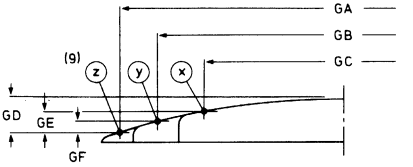

Dimensions in mm

EA	21,6 ± 0,5
EB	12 ± 0,2
EC	40 max
ED	35 ± 1
EE	R12
EF	12 ± 0,2
EG	8
EH	3 min
EK	3 ± 0,5

Dimensions in mm

GA	508,0
GB	406,4
GC	304,8
GD	23,16 ± 2,0
GE	14,64 ± 2,0
GF	8,59 ± 2,0

Dimensions in mm

FA	508,0
FB	38,5 ± 1,8
FC	3
FD	20 min
FE	17 max
FF	25 max
FG	13,4
FK	R8
FL	5°

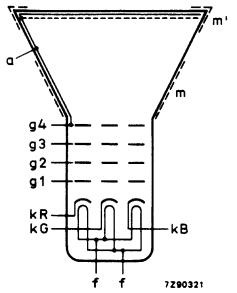

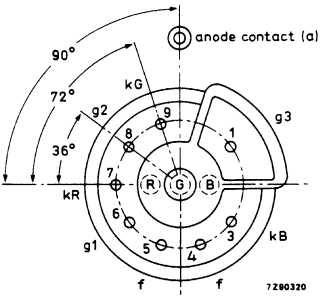

Notes to outline drawings on the preceding pages

1. Configuration of outer conductive coating may be different, but will contain the contact areas as shown in the drawing.
2. To clean this area, wipe only with a soft lintless cloth.
3. One of the four mounting lugs may deviate (1,3 mm max.) from the plane of the other three lugs. This deviation is incorporated in the tolerance of ± 1,8 mm.
4. Minimum space to be reserved for mounting lug.
5. The position of the mounting screw in the cabinet must be within a circle of 8 mm diameter drawn around the true geometrical positions, i.e. corners of a rectangle of 354 mm x 449 mm.
6. Distance from point Z to any hardware.
7. The socket for this base should not be rigidly mounted; it should have flexible leads and be allowed to move freely. After mounting of the tube in the cabinet note that the position of the base can fall within a circle, having a diameter of max. 50 mm, concentric with an imaginary tube axis.
8. Small cavity contact J1-21, IEC 67-III-2.
9. The X, Y and Z reference points are located on the outside surface of the face plate at the intersection of the minor, major and diagonal screen axis respectively, with the minimum published screen.

Sagittal heights with reference to screen centre at the edge of the minimum useful screen

DEVELOPMENT DATA

coordinates x mm	coordinates y mm	sagittal height mm
0*	152,4	8,6
10	152,4	8,6
20	152,4	8,7
30	152,4	8,8
40	152,4	9,1
50	152,4	9,4
60	152,4	9,7
70	152,4	10,1
80	152,4	10,6
90	152,4	11,2
100	152,4	11,8
110	152,4	12,6
120	152,4	13,4
130	152,4	14,2
140	152,4	15,2
150	152,4	16,2
160	152,4	17,3
170	152,4	18,5
180	152,4	19,8
190	152,4	21,2
200	152,4	22,7
203,2**	152,4	23,2
203,2	150	22,9
203,2	140	21,8
203,2	130	20,8
203,2	120	19,9
203,2	110	19,0
203,2	100	18,2
203,2	90	17,5
203,2	80	16,9
203,2	70	16,4
203,2	60	15,9
203,2	50	15,5
203,2	40	15,2
203,2	30	15,0
203,2	20	14,8
203,2	10	14,7
203,2▲	0	14,6

* Point (x)
** Diagonal
▲ Point (y)

Base JEDEC B8-288

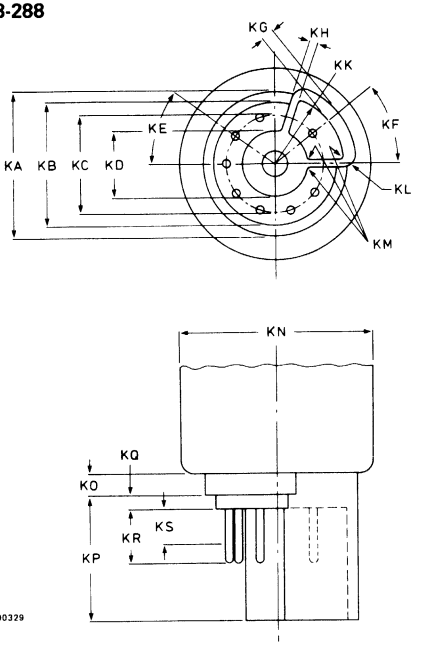

Dimensions in mm

KA	17,9 mm
KB	15,4 max
KC	12,0
KD	7,9 min; 8,2
KE	36°
KF	38°
KG	1,3 max
KH	0,8 min; 1,0 max
KK	R8,66 ± 0,1
KL	R1,0
KM	R0,25
KN	23,2 max
KO	2,7 max
KP	15,4 ± 0,2
KQ	1,6 max
KR	6,85 max
KS	4,5 min
KT	1,016 ± 0,076
KU	0,63 max
KV	0,4 min

Reference line gauge; G-R90CJ10

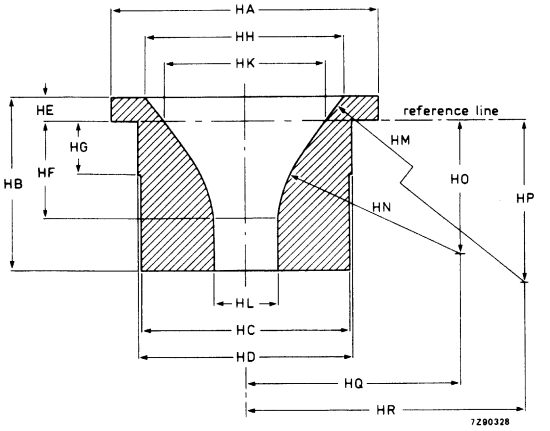

Dimensions in mm

HA	ϕ 100,00
HB	65,00
HC	ϕ 78,70
HD	ϕ 80,00
HE	9,20 ± 0,02
HF	36,22 ± 0,02
HG	20,00
HH	ϕ 75,48 ± 0,02
HK	ϕ 60,77 ± 0,02
HL	ϕ 23,90 $^{+0,04}_{-0}$
HM	R220,00
HN	R70,00
HO	50,30
HP	132,71
HQ	80,52
HR	205,85

TYPICAL OPERATING CONDITIONS

The voltages are specified with respect to grid 1.

Anode voltage	$V_{a,g4}$	25 kV
Grid 3 (focusing electrode) voltage	V_{g3}	7,25 to 8,25 kV
Grid 2 voltage for a spot cut-off voltage V_k = 120 V	V_{g2}	310 to 650 V

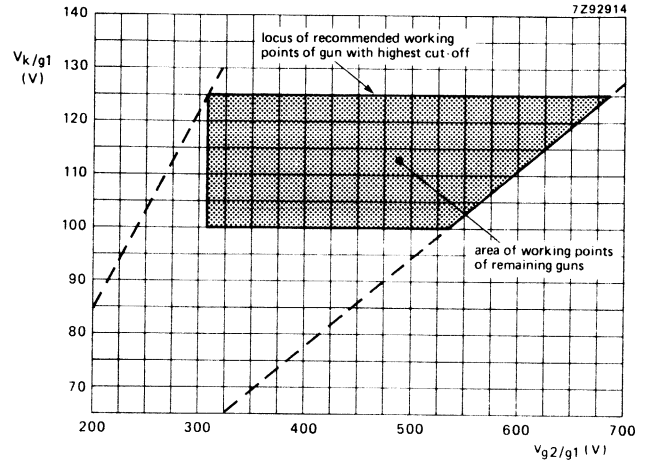

Spot cut-off design chart.

DEVELOPMENT DATA

Grid 2 voltage (V_{g2}) adjusted for highest gun spot cut-off voltage V_k = 125 V.

Remaining guns adjusted for spot cut-off by means of cathode voltage

V_{g2} range 310 to 685 V;

V_k range 100 to 125 V.

Adjustment procedure:

Set the cathode voltage (V_k) for each gun at 125 V; increase the grid 2 voltage (V_{g2}) from approx. 300 V to the value at which one of the colours become just visible. Now decrease the cathode voltage of the remaining guns so that the other colours also become visible.

EQUIPMENT DESIGN VALUES

The values are valid for anode voltages between 20 and 27,5 kV.
The voltages are specified with respect to grid 1.

Grid 3 (focusing electrode) voltage	V_{g3}	29 to 33% of anode voltage
Grid 2 voltage and cathode voltage for visual extinction of focused spot	V_{g2} and V_k	see cut-off design chart
Difference in cut-off voltages between guns in any tube	ΔV_k	lowest value > 80% of highest value
Heater voltage	V_f	6,3 V at zero beam current
Video drive characteristics		see graphs
Grid 3 (focusing electrode) current	I_{g3}	−2 to + 2 μA
Grid 2 current	I_{g2}	−2 to + 2 μA
Grid 1 current under cut-off conditions	I_{g1}	−2 to + 2 μA

To produce white of 6500K + 7 M.P.C.D.
(CIE co-ordinates x = 0,313, y = 0,329)

Percentage of the total anode current supplied by each gun (typical)

red gun		38,3%
green gun		35,8%
blue gun		25,9%

Ratio of anode currents

red gun to green gun	min.	0,8
	average	1,1
	max.	1,4
red gun to blue gun	min.	1,1
	average	1,5
	max.	1,9
blue gun to green gun	min.	0,5
	average	0,7
	max.	0,9

LIMITING VALUES (Design maximum rating system unless otherwise stated)

The voltages are specified with respect to grid 1.

Anode voltage	$V_{a,g4}$	max. min.	27,5 kV 20 kV		notes 1, 2, 3 notes 1 and 4
Long-term average current for three guns	I_a	max.	1000	μA	note 5
Grid 3 (focusing electrode) voltage	V_{g3}	max.	11	kV	
Grid 2 voltage, peak	V_{g2p}	max.	1000	V	
Cathode voltage					
positive	V_k	max.	400	V	
positive operating cut-off, during adjustment	V_k	max.	200	V	
negative	$-V_k$	max.	0	V	
negative peak	$-V_{kp}$	max.	2	V	
Heater voltage	V_f		$6{,}3\ V^{+5\ \%}_{-10\ \%}$		notes 1 and 6
Heater-cathode voltage					
heater negative with respect to cathode					
after equipment warm-up period	V_{kf}	max.	200	V	
heater positive with respect to cathode	$-V_{kfp}$	peak	200	V	note 1
	$-V_{kf}$	max. (d.c. component value)	0	V	

DEVELOPMENT DATA

Notes

1. Absolute maximum rating system.
2. The X-ray dose rate remains below the acceptable value of 0,5 mR/h, measured with ionization chamber when the tube is used within its limiting values.
3. During adjustment on the production line this value is likely to be surpassed considerably. It is therefore strongly recommended to first make the necessary adjustments for normal operation without picture tube.
4. Operation of the tube at lower voltages impairs the luminance and resolution.
5. The short-term average anode current should be limited by circuitry to 1500 μA.
6. For maximum cathode life and optimum performance, it is recommended that the heater supply be designed for 6,3 V at zero beam current.

FLASHOVER PROTECTION

With the high voltage used with this tube (max. 27,5 kV) internal flashovers may occur. As a result of the Soft-Flash technology these flashover currents are limited to approx. 60 A offering higher set reliability, optimum circuit protection and component savings.
Primary protective circuitry using properly grounded spark gaps and series isolation resistors (preferably carbon composition) is still necessary to prevent tube damage. The spark gaps should be connected to all picture tube electrodes at the socket according to the figure below; they are not required on the heater pins. No other connections between the outer conductive coating and the chassis are permissible.
The spark gaps should be designed for a breakdown voltage at the focusing electrode (g3) of 12,5 kV ($1{,}5 \times V_{g3}$ max. at $V_{a,g4}$ = 25 kV), and at the other electrodes of 1,5 to 2 kV.
The values of the series isolation resistors should be as high as possible (min. 1,5 kΩ) without causing deterioration of the circuit performance. The resistors should be able to withstand an instantaneous surge of 20 kV for the focusing circuit and 12 kV for the remaining circuits without arcing.
Additional information is available on request.

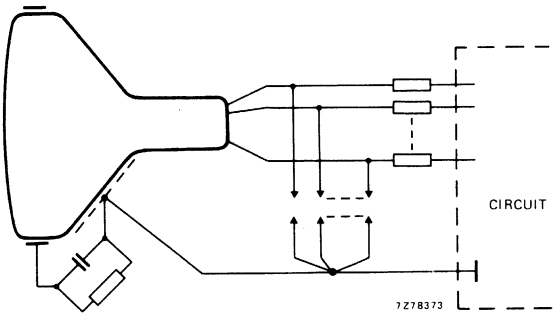

BEAM CORRECTIONS

Maximum centring error in any direction after colour purity, static convergence, and horizontal centre line correction, measured with deflection coils in nominal position	3 mm

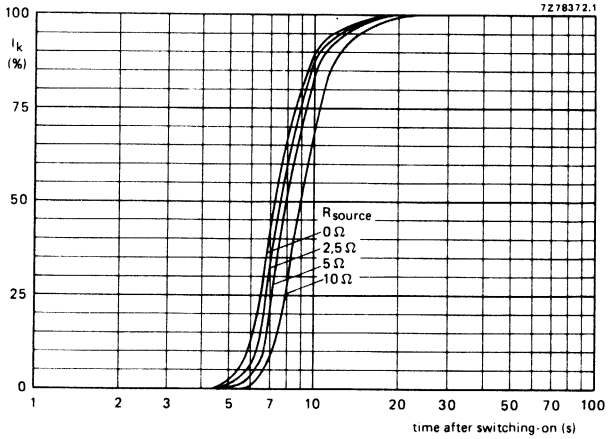

Cathode heating time after switching on, measured under typical operating conditions.

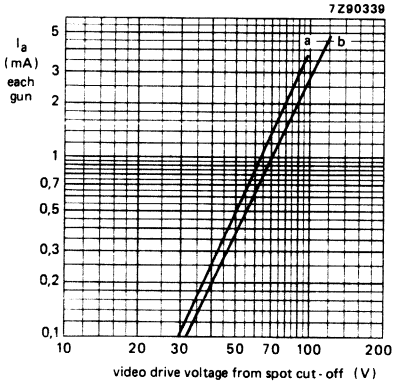

Typical cathode drive characteristics.

V_f = 6,3 V;

$V_{a,g4}$ = 25 kV;

V_{g3} adjusted for focus;

V_{g2} (each gun) adjusted to provide spot cut-off for V_k = 100 V (curve a), and V_k = 125 V (curve b).

For optimum picture performance it is recommended that the cathodes are not driven below + 1 V.

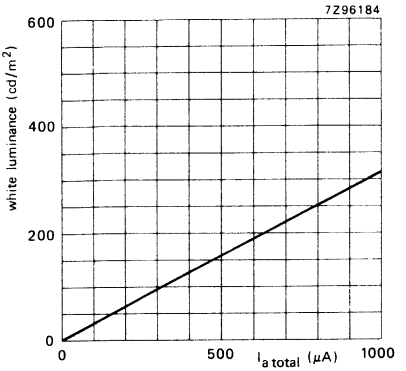

Luminance at the centre of the screen as a function of I_{total}.
$V_{a,g4}$ = 25 kV.
Scanned area = 406,4 mm x 304,8 mm;
CIE co-ordinates x = 0,313, y = 0,329.

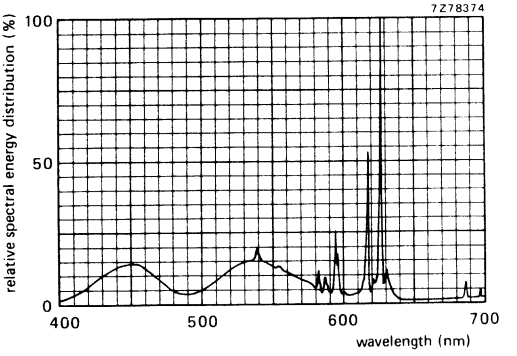

Simultaneous excitation of red, green and blue phosphor, measured in a tube, to produce white of x = 0,313, y = 0,329. Exact shape of the peaks depends on the resolution of the measuring apparatus.

Colour co-ordinates:	x	y
red	0,635	0,340
green	0,315	0,600
blue	0,150	0,060

DEGAUSSING

The picture tube has an internal magnetic shield. This shield and the shadow mask with its suspension system may be provided with an automatic degaussing system, consisting of two coils covering top and bottom cone parts, or one large coil.

For proper degaussing an initial magnetomotive force (m.m.f.) of 300 ampere-turns* is required in each of the coils. This m.m.f. has to be gradually decreased by appropriate degaussing circuitry. In the steady state, no significant m.m.f. should remain in the coils (≤ 0,3 ampere-turns**).

If single-phase power rectification is employed in the t.v. circuitry, provision should be included to prevent asymmetric distortion of the a.c. voltage applied to the degaussing circuit due to high d.c. inrush currents.

Examples of a double-coil and of a single-coil system are given below.

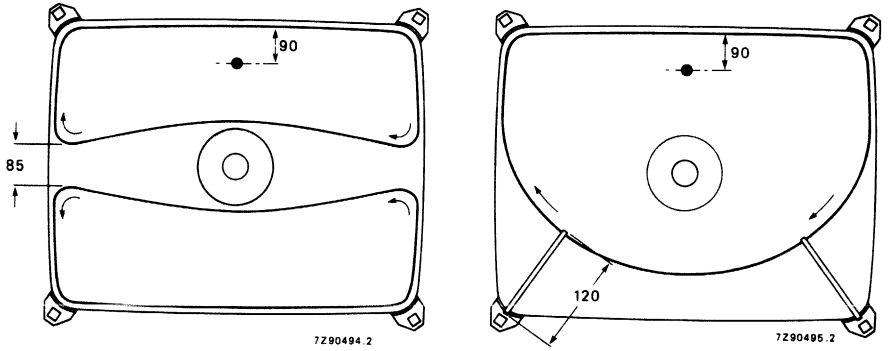

Position of degaussing coils on the picture tube.

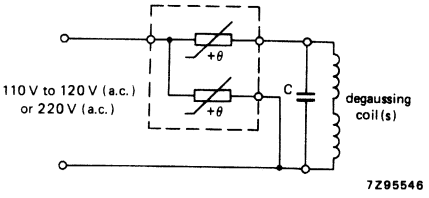

Degaussing circuit using dual PTC thermistor 2322 662 98009; C = 100 nF, for double-coil system, optional for single-coil system.

Data of degaussing coil

	double-coil system	single-coil system
Circumference	125 cm	139 cm
Number of turns	60	140
Copper-wire diameter	0,4 mm	0,4 mm
Aluminium-wire diameter	0,5 mm	0,5 mm
Resistance	22 Ω (two coils in series)	27 Ω

* 300 ampere-turns for double-coil system; 700 ampere-turns for single-coil system.

** ≤ 0,3 ampere-turns for double-coil system; ≤ 0,6 ampere-turns for single-coil system.

FLAT SQUARE HIBRICON COLOUR PICTURE TUBES

- Flat and square screen
- 90° deflection
- In-line, hi-bi potential A R T* gun
- 29,1 mm neck diameter
- Mask with corner suspension
- Hibricon screen with pigmented phosphors featuring high brightness and increased contrast performance
- Quick-heating low-power cathodes
- Soft flash
- Slotted shadow mask optimized for minimum moiré at 525 lines system
- Internal magnetic shield
- Internal multipole
- Rimband type implosion protection
- The tube is supplied with a matched hybrid saddle toroidal deflection unit of the AT6030 series; it forms a self-converging and raster correction free assembly

QUICK REFERENCE DATA

Deflection angle	90°
Minimum useful screen diagonal	51 cm
Overall length	444 mm
Neck diameter	29,1 mm
Heating	6,3 V, 310 mA
Focusing voltage	31% of anode voltage

Types A51EBD00X and A51EBD10X are identical, except for the light transmission of the face glass at centre: 64,5% for A51EBD00X, and 52,3% for A51EBD10X.

* Aberration Reducing Triode.

GENERAL DATA

1. ELECTRICAL

Electron guns		unitized triple-aperture electrodes; aberration reducing triode
Heating		
heater voltage	V_f	6,3 V
heater current	I_f	310 mA
Focusing method		electrostatic
Focus lens		hi-bi-potential
Convergence method		magnetic
Deflection method		magnetic
Deflection angles (approx.)		
diagonal		90 deg
horizontal		78 deg
vertical		60 deg
Direct interelectrode capacitances (approx.)		
grid 1 to all other electrodes	C_{g1}	17 pF
all cathodes to all other electrodes	C_k	15 pF
each cathode to all other electrodes	C_{kR}, C_{kG}, C_{kB}	5 pF
grid 3 to all other electrodes	C_{g3}	6 pF
grid 2 to all other electrodes	C_{g2}	4,5 pF
anode to external conductive coating, including rim band	$C_{a(m+m')}$	< 2200 pF > 1600 pF
Resistance between rimband and external conductive coating		$\geqslant$ 50 MΩ

2. OPTICAL

Screen		metal-backed vertical phosphor stripes; phosphor lines follow glass contour
Screen finish		high polish
Useful screen dimensions		
diagonal		min. 510,0 mm (20,08 in)
horizontal axis		min. 409,3 mm (16,11 in)
vertical axis		min. 309,6 mm (12,19 in)
area		min. 1253 cm^2 (194,22 in^2)
Positional accuracy of the screen with respect to the glass contour		see Figure on the next page
Phosphors		
red		pigmented europium activated rare earth
green		sulphide type
blue		pigmented sulphide type
Persistence		medium short

Colour co-ordinates	x	y
red	0,635	0,340
green	0,315	0,600
blue	0,150	0,060

A = 171,7 mm (6,76 in)
B = 224,7 mm (8,85 in)
C = 115,6 mm (4,55 in)
D = 174,9 mm (6,89 in)
E = 23,5 mm (0,93 in)

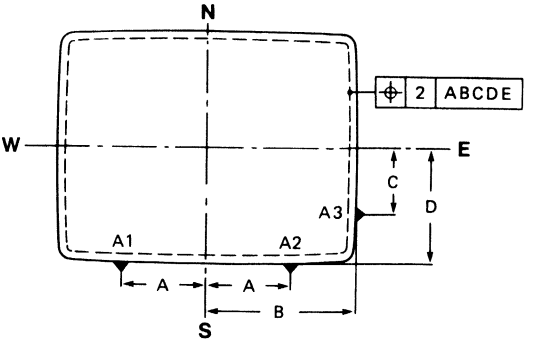

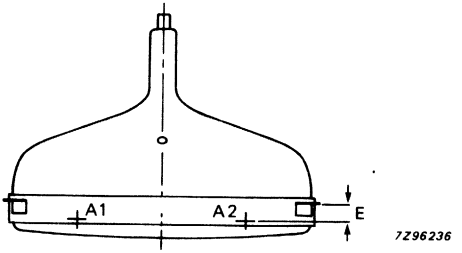

Centre-to-centre distance of vertical identical colour phosphor stripes, at screen centre	approx. 0,69 mm (0,027 in)
Light transmission of face glass at centre	
A51EBD00X	64,5%
A51EBD10X	52,3%

3. MECHANICAL (see also the figures on pages 12, 13 and 14)

Overall length	443,7 ± 5 mm (17,47 ± 0,20 in)
Neck diameter	$29{,}1\ ^{+1{,}4}_{-0{,}7}$ mm ($1{,}15\ ^{+0{,}06}_{-0{,}03}$ in) *
Bulb dimensions	
diagonal	max. 546,1 mm (21,5 in)
width	max. 455,6 mm (17,9 in)
height	max. 359,6 mm (14,16 in)
Base designation	JEDEC B10-277
Anode contact designation	recessed small cavity cap (JEDEC no. J1-21; IEC 67-III-2)
Bulb	
funnel	EIAJ-J540F1
panel	to be established
Implosion protection	shrink system, UL approved
Mass	15 kg (33 lbs)
Mounting position	anode contact on top

* In the region of 78,5 mm (3,09 in) from the neck end, the maximum diameter is 30 mm (1,18 in).

RATINGS AND ELECTRICAL DATA

1. LIMITING VALUES (Design maximum rating system unless otherwise stated)

Unless otherwise specified, voltage values are for each gun and values are positive with respect to grid 1.

Anode voltage	$V_{a,g4}$	max. min.	30 kV 20 kV	notes 1 and 2 note 3
Long-term average current for three guns	I_a	max.	1000 μA	note 4
Grid 3 (focusing electrode) voltage	V_{g3}	max.	11 kV	
Grid 2 voltage	V_{g2}	max.	1200 V	note 5
Cathode voltage				
positive	V_k	max.	400 V	
positive operating cut-off	V_k	max.	200 V	
negative	$-V_k$	max.	0 V	
negative peak	$-V_{kp}$	max.	2 V	
Cathode to heater voltage				
positive	V_{kf}	max.	250 V	
positive peak	V_{kfp}	max.	300 V	note 1
negative	$-V_{kf}$	max.	135 V	
negative peak	$-V_{kfp}$	max.	180 V	note 1
Heater voltage	V_f	6,3 V	+ 5% −10%	notes 1 and 6

Notes

1. Absolute maximum rating system.
2. During adjustment on the production line this value is likely to be surpassed considerably. It is therefore strongly recommended to first make the necessary adjustments for normal operation without picture tube.
3. Operation of the tube at lower voltages impairs the luminance and resolution, and could impair convergence.
4. The short-term average anode current should be limited by circuitry to 1500 μA.
5. During adjustment on the production line max. 1500 V is permitted.
6. For maximum cathode life it is recommended that the heater supply be designed for 6,3 V at zero beam current.

2. EQUIPMENT DESIGN RANGES

Unless otherwise specified, values are for each gun and voltage values are positive with respect to grid 1.

For anode voltages between 20 kV and 30 kV:

Grid 3 (focusing electrode) voltage	V_{g3}	29% to 33% of anode voltage
Grid 2 voltage and cathode voltage for visual extinction of undeflected focused spot	V_{g2}, V_k	see cut-off design chart, page 19; note 1
Maximum ratio of cathode voltage highest gun to lowest gun in any tube		1,25
Video drive characteristics		see graphs on page 20; note 2
Grid 3 current	I_{g3}	-2 to $+2$ μA
Grid 2 current	I_{g2}	-2 to $+2$ μA
Grid 1 current, under cut-off condition	I_{g1}	-2 to $+2$ μA

	white D 6500K + 7 M.P.C.D			9300K + 27 M.P.C.D.		
To produce white of the following CIE co-ordinates	x 0,313			0,281		
	y 0,329			0,311		
Percentage of total anode current supplied by each gun (typical)	red	green	blue	red	green	blue
	38,3	35,8	25,9%	27,9	39,1	33,0%
Ratio of anode current	min.	typ.	max.	min.	typ.	max.
red to blue	1,1	1,5	1,9	0,6	0,9	1,2
red to green	0,8	1,1	1,4	0,5	0,7	1,0
blue to green	0,5	0,7	1,0	0,6	0,9	1,2

Notes

1. The common V_{g2} should be adjusted as follows:
   Set the cathode voltage, V_k, for each gun at 130 V. Increase the V_{g2} from about 575 V to the value at which the raster of one of the guns becomes just visible. Now decrease the V_k of the remaining guns so that the rasters of these guns also become visible.
2. For optimum picture performance it is recommended that the cathodes are not driven below +1 V.

3. EXAMPLE OF USE OF DESIGN RANGES

Unless otherwise specified, voltage values are for each gun and are positive with respect to grid 1.

Anode voltage	$V_{a,g4}$	27,5 kV	
Grid 3 (focusing electrode) voltage	V_{g3}	8,0 to 9,1 kV	
Grid 2 voltage when circuit design utilizes cathode voltage of 130 V for visual extinction of focused spot	V_{g2}	575 to 825 V	
Heater voltage, under operating conditions	V_f	6,3 V	note 1

	A51EBD00X	A51EBD10X	
Luminance at the centre of the screen L	204 cd/m² (59,64 foot lambert)	165 cd/m² (48,24 foot lambert)	note 2
	198 cd/m² (57,89 foot lambert)	160 cd/m² (46,78 foot lambert)	note 3

4. BEAM CORRECTIONS

Maximum centring error in any direction after colour purity, static convergence, and horizontal centre line correction, measured with deflection coils in nominal position: 4 mm (0,16 in)

5. LIMITING CIRCUIT VALUES

High voltage circuits

To minimize the possibility of damage to the circuit caused by a momentary internal arc, it is recommended that the high-voltage power supply and the grid 3 power supply be of the limited energy type.

Grid 3 circuit resistance	R_{g3}	max.	70 MΩ
Grid 1 to cathode circuit resistance (each gun)	R_{g1k}	max.	0,75 MΩ

Notes

1. The tube has quick-heating cathodes; if standby conditions are still required operate at 5,0 V.
2. Tube settings adjusted to produce white of 9300K + 27 M.P.C.D. (x = 0,281, y = 0,311), focused raster, current density 0,4 $\mu A/cm^2$.
3. Tube settings adjusted to produce white of 6500K + 7 M.P.C.D. (x = 0,313, y = 0,329), focused raster, current density 0,4 $\mu A/cm^2$.

6. DEGAUSSING

The picture tube has an internal magnetic shield. This shield and the shadow mask with its suspension system may be provided with an automatic degaussing system, consisting of two coils covering top and bottom cone parts, or one large coil.

For proper degaussing an initial magnetomotive force (m.m.f.) of 300 ampere-turns* is required in each of the coils. This m.m.f. has to be gradually decreased by appropriate degaussing circuitry. In the steady state, no significant m.m.f. should remain in the coils ($\leqslant$ 0,3 ampere-turns**).

If single-phase power rectification is employed in the t.v. circuitry, provision should be included to prevent asymmetric distortion of the a.c. voltage applied to the degaussing circuit due to high d.c. inrush currents.

Examples of a double-coil and of a single-coil system are given below.

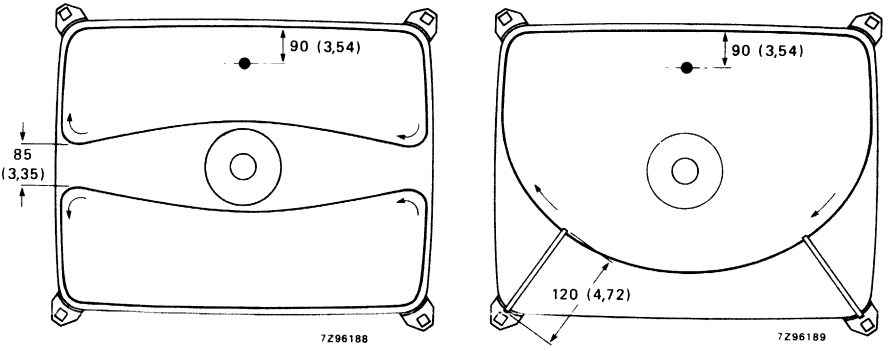

Position of degaussing coils on the picture tube.

Degaussing circuit using dual PTC thermistor 2322 662 98009; C = 100 nF, for double-coil system, optional for single-coil system.

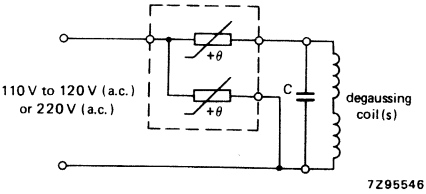

Data of degaussing coil

	double-coil system	single-coil system
Circumference	125 cm (49 in)	139 cm (54 in)
Number of turns	60	140
Copper-wire diameter	0,4 mm (0,016 in)	0,4 mm (0,016 in)
Aluminium-wire diameter	0,5 mm (0,02 in)	0,5 mm (0,02 in)
Resistance	22 Ω (two coils in series)	27 Ω

* For double-coil system; 700 ampere-turns for single-coil system.
** For double-coil system; $\leqslant$ 0,6 ampere-turns for single-coil system.

7. FLASHOVER PROTECTION

With the high voltage used with this tube (max. 30 kV) internal flashovers may occur. As a result of the Soft-Flash technology these flashover currents are limited to approx. 60 A offering higher set reliability, optimum circuit protection and component savings.
Primary protective circuitry using properly grounded spark gaps and series isolation resistors (preferably carbon composition) is still necessary to prevent tube damage. The spark gaps should be connected to all picture tube electrodes at the socket according to the figure below; they are not required on the heater pins. No other connections between the outer conductive coating and the chassis are permissible. The spark gaps should be designed for a breakdown voltage at the focusing electrode (g3) of 13,5 kV (1,5 x V_{g3} max. at $V_{a,g4}$ = 27,5 kV), and at the other electrodes of 1,5 to 2 kV.
The values of the series isolation resistors should be as high as possible (min. 1,5 kΩ) without causing deterioration of the circuit performance. The resistors should be able to withstand an instantaneous surge of 20 kV for the focusing circuit and 12 kV for the remaining circuits without arcing. Additional information is available on request.

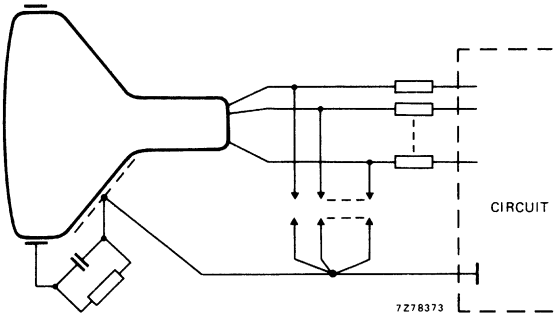

X-RADIATION LIMIT

Maximum anode voltage at which the X-radiation emitted will not exceed 0,5 mR/h at an anode current of 300 μA

entire tube	35,5 kV *
face-plate only	37 kV

Warning:

If the value for the tube face only is used as design criterion, adequate shielding must be provided in the receiver for the anode contact and/or certain portions of the tube funnel and panel skirt to insure that the X-radiation from the receiver is attenuated to a value equal to or lower than that specified for the face of the tube.

Maximum voltage difference between anode and focus electrode at which the X-radiation will not exceed 0,5 mR/h 30 kV

Warning:

If the voltage value above can be exceeded in the receiver, additional attenuation of the X-radiation through the tube neck may be required.

The X-radiation emitted from this picture tube, as measured in accordance with the procedure of JEDEC Publication No. 64D, will not exceed 0,5 mR/h throughout the useful tube life when operated within the 'Design maximum ratings'.

The tube should not be operated beyond its 'Design maximum ratings' stated above, but its X-radiation will not exceed 0,5 mR/h for anode voltage and current combinations given by the isoexposure-rate limits characteristics shown on the next page.

Operation above the values shown by the curve may result in failure of the television receiver to comply with the Federal Performance Standard of the U.S. for Television Receivers, Section 1020-10 of Part 1020 of Title 21, Code of Federal Regulation (PL90-602) as published in the Federal Register Volume 38, No. 198, Monday, October 15, 1973.

Maximum X-radiation as a function of anode voltage at 300 μA anode current is shown by the curve on the next page. X-radiation at a constant anode voltage varies linearly with anode current.

* This rating applies only if the anode connector used by the set maker provides the necessary attenuation to reduce the X-radiation from the anode contact by a factor equal to the difference between the anode button isoexposure-rate limit curve and the isoexposure-rate limit curve for the entire tube.

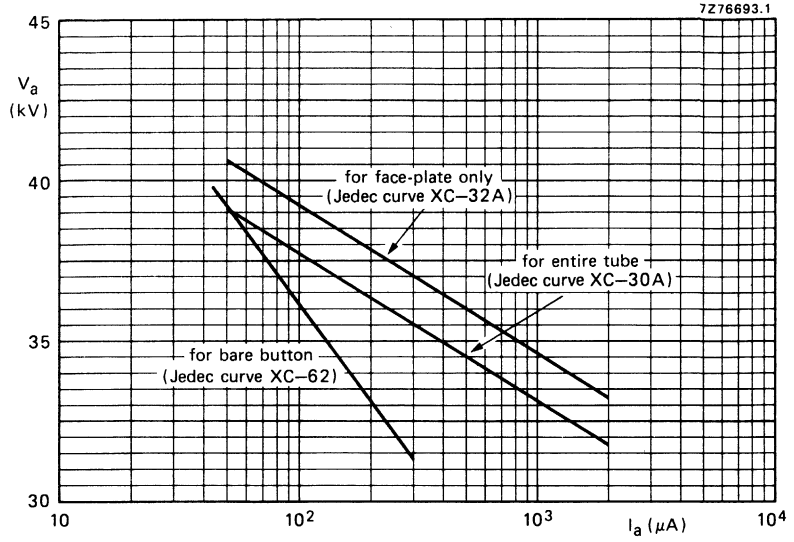

0,5 mR/h isoexposure-rate limit curve.

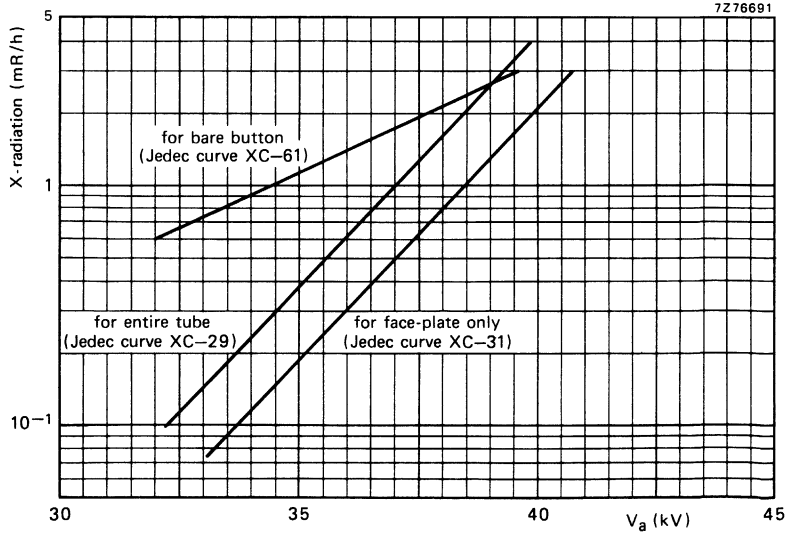

X-radiation limit curve at a constant anode current of 300 μA.

WARNINGS

X-radiation

Operation of this colour picture tube at abnormal conditions which exceed the 0,5 mR/h iso-dose rate curve shown on the preceding page may produce soft X-rays which may constitute a health hazard on prolonged exposure at close range unless adequate external screening is provided. Precautions must therefore be exercised during servicing of TV receivers employing this tube to assure that the anode voltage and other tube voltages are adjusted to the recommended values so that the 'Design maximum ratings' will not be exceeded.

Tube replacement

This picture tube employs integral X-radiation and implosion protection and must be replaced with a tube of the same type number or a recommended replacement to assure continued safety.

Shock hazard

The high voltage at which the tube is operated may be very dangerous. The design of the TV receiver should include safeguards to prevent the user from coming in contact with the high voltage. Extreme care should be taken in the servicing or adjustment of any high-voltage circuit.

Caution must be exercised during the replacement or servicing of the picture tube since a residual electrical charge may be contained on the high-voltage capacitor formed by the external and internal conductive coatings of the picture tube funnel. To remove any residual high-voltage charges from the picture tube, 'bleed-off the charge by shorting the anode contact button, located in the funnel of the picture tube, to the external conductive coating before handling the tube. Discharging the high voltage to isolated metal parts such as cabinets and control brackets may produce a shock hazard.

Tube handling

Picture tubes should be kept in the shipping box or similar protective container until just prior to installation. Wear heavy protective clothing, including gloves and safety goggles with side shields, in areas containing unpacked and unprotected tubes to prevent possible injury from flying glass in the event a tube breaks. Handle the picture tube with extreme care. Do not strike, scratch or subject the tube to more than moderate pressure. Particular care should be taken to prevent damage to the seal area.

The receiver mounting system should incorporate sufficient cushioning so that under normal conditions of shipment or handling an impact acceleration of more than 35g is never applied to the tube.

MECHANICAL DATA

The dimensions are given in mm, and in inches between brackets.

Notes are on page 15.

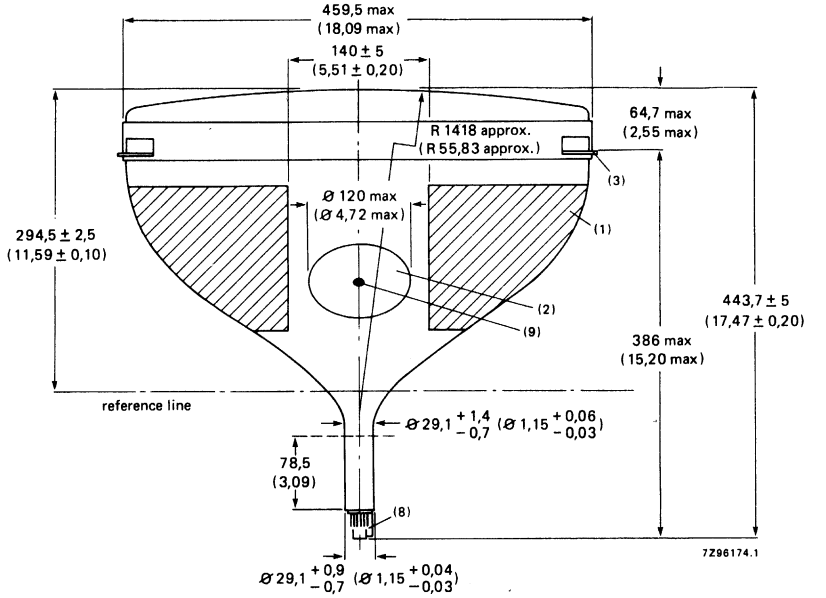

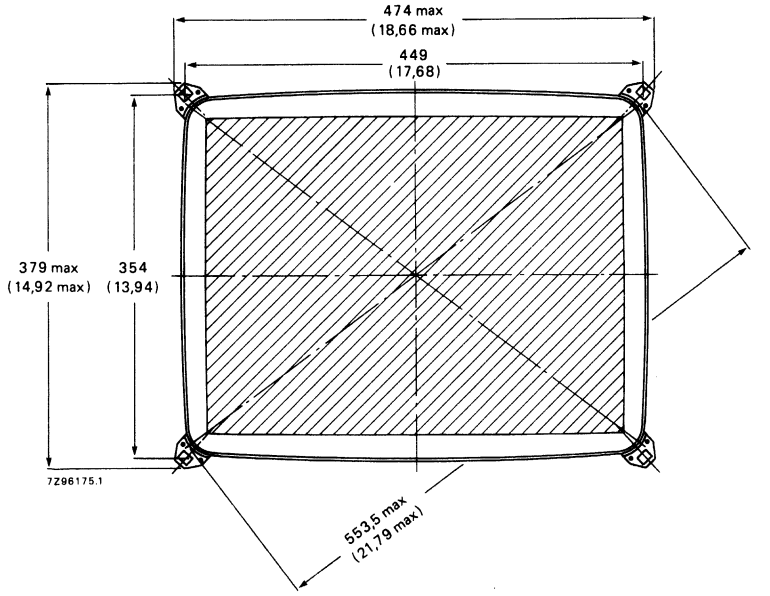

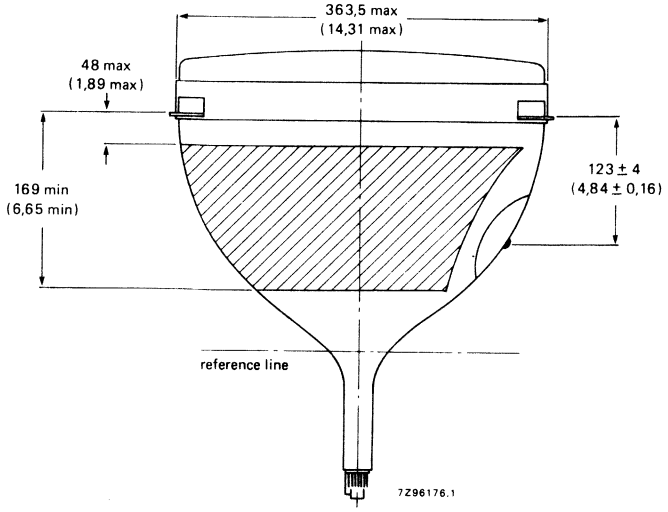
363,5 max
(14,31 max)
48 max
(1,89 max)
169 min
(6,65 min)
123 ± 4
(4,84 ± 0,16)
reference line
7Z96176.1

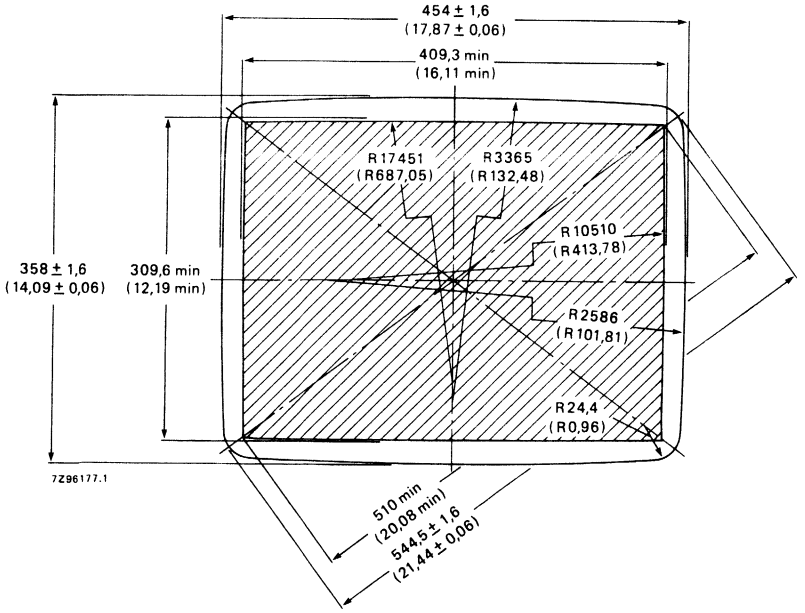
454 ± 1,6
(17,87 ± 0,06)
409,3 min
(16,11 min)
R17451
(R687,05)
R3365
(R132,48)
R10510
(R413,78)
R2586
(R101,81)
R24,4
(R0,96)
358 ± 1,6
(14,09 ± 0,06)
309,6 min
(12,19 min)
7Z96177.1
510 min
(20,08 min)
544,5 ± 1,6
(21,44 ± 0,06)

MECHANICAL DATA (continued)

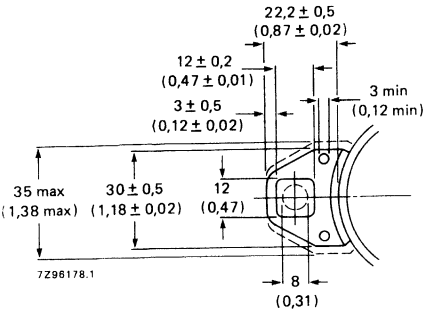

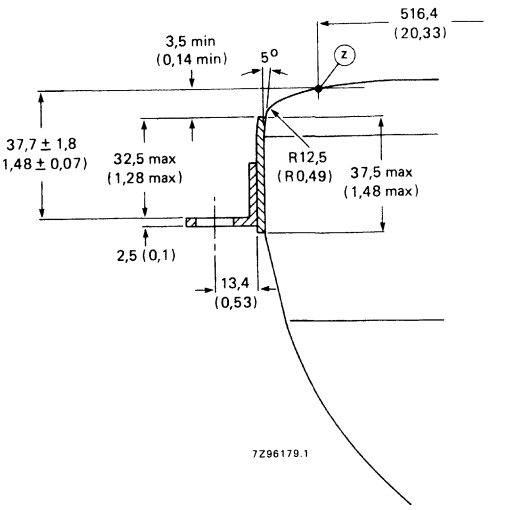

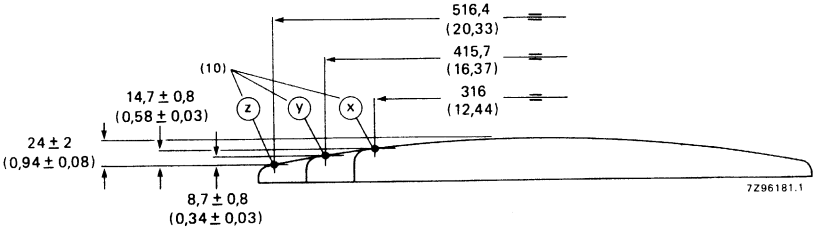

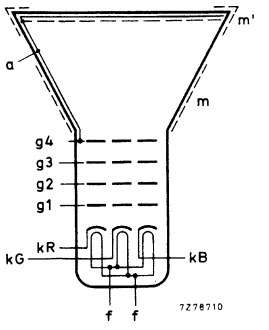

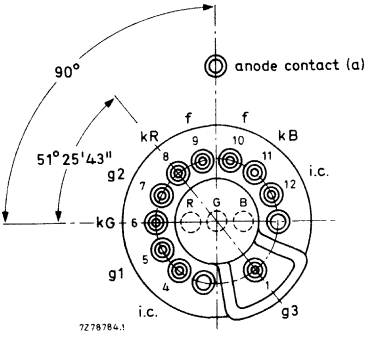

i.c. = internally connected
(not to be used)

Notes to outline drawings on the preceding pages

1. Configuration of outer conductive coating may be different but will contain the contact area as shown in the drawing.
2. To clean this area, wipe only with a soft lintless cloth.
3. The displacement of any lug with respect to the plane through the three other lugs is max. 1,3 mm (0,05 in). This deviation is incorporated in the tolerance of ± 1,8 mm (0,07 in).
4. Minimum space to be reserved for mounting lug.
5. The position of the mounting screw in the cabinet must be within a circle of 8 mm diameter drawn around the true geometrical positions, i.e. the corners of a rectangle of 354 mm (13,94 in) x 449 mm (17,68 in).
6. Not applicable.
7. Not applicable.
8. The socket for this base should not be rigidly mounted; it should have flexible leads and be allowed to move freely. After mounting of the tube in the cabinet note that the position of the base can fall within a circle, having a diameter of max. 50 mm (1,968 in), concentric with an imaginary tube axis.
9. Small cavity contact J1-21, IEC 67-III-2.
10. The X, Y and Z reference points are located on the outside surface of the face plate 3,2 mm (0,13 in) beyond the intersection of the minor, major and diagonal screen axis respectively, with the minimum published screen.

Sagittal heights with reference to screen centre at the edge of the minimum useful screen

coordinates		sagittal height
x mm	y mm	mm
0	154,8	8,9
20	154,8	9,0
40	154,8	9,3
60	154,7	10,0
80	154,6	10,9
100	154,5	12,1
120	154,4	13,6
140	154,2	15,4
160	154,1	17,5
180	153,9	20,0
200	153,7	22,8
203,5	153,6	23,4
203,6	150	23,0
203,7	140	21,9
204,0	120	20,0
204,2	100	18,4
204,4	80	17,1
204,5	60	16,1
204,6	40	15,4
204,6	20	15,0
204,7	0	14,9

coordinates		sagittal height
x inch	y inch	inch
0	6,09	0,35
0,79	6,09	0,35
1,57	6,09	0,37
2,36	6,09	0,39
3,15	6,09	0,43
3,94	6,08	0,48
4,72	6,08	0,54
5,51	6,07	0,61
6,30	6,07	0,69
7,09	6,06	0,79
7,87	6,05	0,90
8,01	6,05	0,92
8,02	5,91	0,91
8,02	5,51	0,86
8,03	4,72	0,79
8,04	3,94	0,72
8,05	3,15	0,67
8,05	2,36	0,63
8,06	1,57	0,61
8,06	0,79	0,59
8,06	0	0,59

Maximum cone contour

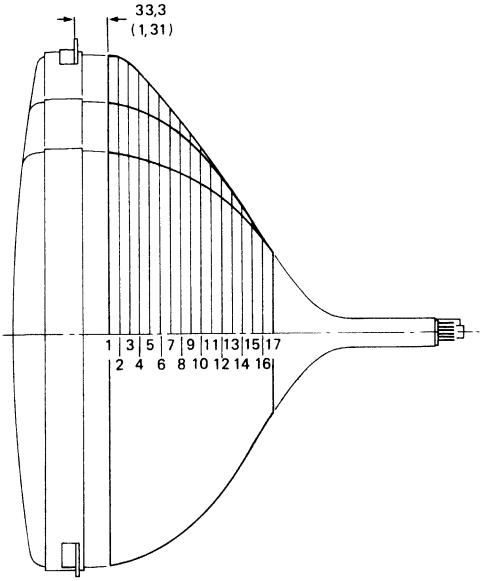

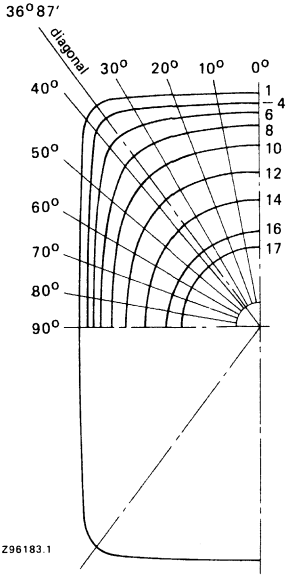

Dimensions in mm

section	nom. distance from section 1	max. distance from centre										
		0°	10°	20°	30°	diag.	40°	50°	60°	70°	80°	90°
1	0	225,7	228,9	239,1	257,6	271,8	267,2	227,9	203,1	187,9	179,6	177,0
2	10	224,6	227,7	237,7	255,9	270,0	265,3	226,7	201,9	186,8	178,6	175,9
3	20	221,8	224,8	234,3	251,1	264,3	259,6	222,9	198,9	184,2	176,1	173,5
4	30	218,1	220,9	229,6	244,5	254,7	250,6	217,9	195,1	180,9	173,1	170,6
5	40	213,8	216,4	224,1	236,5	243,1	239,6	212,0	190,9	177,3	169,9	167,5
6	50	208,7	211,0	217,7	227,5	231,3	228,4	205,6	186,3	173,6	166,5	164,2
7	60	202,6	204,5	210,0	217,5	219,5	217,0	198,5	181,0	169,3	162,6	160,5
8	70	195,1	196,8	201,3	206,9	207,6	205,4	190,3	175,1	164,4	158,3	156,3
9	80	186,2	187,6	191,4	195,6	195,4	193,5	181,3	168,4	158,9	153,3	151,5
10	90	175,6	176,9	180,1	183,3	182,8	181,1	171,4	160,7	152,5	147,6	146,0
11	100	163,6	164,6	167,4	169,9	169,2	167,9	160,4	151,9	145,2	141,0	139,6
12	110	150,3	151,3	153,8	155,7	154,7	153,6	147,9	141,7	136,6	133,4	132,3
13	120	136,4	137,3	139,3	140,4	139,5	138,6	134,5	130,3	126,8	124,6	123,9
14	130	122,1	122,8	124,4	124,9	124,0	123,3	120,7	118,2	116,1	114,7	114,3
15	140	107,5	107,7	108,2	108,6	108,4	108,2	107,0	105,7	104,5	103,8	103,5
16	150	92,6	92,3	92,3	92,6	92,8	92,9	92,9	92,6	92,1	91,6	91,4
17	159,5	78,1	78,1	78,1	78,1	78,1	78,1	78,1	78,1	78,1	78,1	78,1

Dimensions in inches

section	nom. distance from section 1	max. distance from centre										
		0°	10°	20°	30°	diag.	40°	50°	60°	70°	80°	90°
1	0	8,89	9,01	9,41	10,14	10,70	10,52	8,97	8,00	7,40	7,07	6,97
2	0,39	8,84	8,96	9,36	10,07	10,63	10,44	8,93	7,95	7,35	7,03	6,93
3	0,79	8,73	8,85	9,22	9,89	10,41	10,22	8,78	7,83	7,25	6,93	6,83
4	1,18	8,59	8,70	9,04	9,63	10,03	9,87	8,58	7,68	7,12	6,81	6,72
5	1,57	8,42	8,52	8,82	9,31	9,57	9,43	8,35	7,52	6,98	6,69	6,59
6	1,97	8,22	8,31	8,57	8,96	9,11	8,99	8,09	7,33	6,83	6,56	6,46
7	2,36	7,98	8,05	8,27	8,56	8,64	8,54	7,81	7,13	6,67	6,40	6,32
8	2,76	7,68	7,75	7,93	8,15	8,17	8,09	7,49	6,89	6,47	6,23	6,15
9	3,15	7,33	7,39	7,54	7,70	7,69	7,62	7,14	6,63	6,26	6,04	5,96
10	3,54	6,91	6,96	7,09	7,22	7,20	7,13	6,75	6,33	6,00	5,81	5,75
11	3,94	6,44	6,48	6,59	6,69	6,66	6,61	6,31	5,98	5,72	5,55	5,50
12	4,33	5,92	5,96	6,06	6,13	6,09	6,05	5,82	5,58	5,38	5,25	5,21
13	4,72	5,37	5,41	5,48	5,53	5,49	5,46	5,30	5,13	4,99	4,91	4,88
14	5,12	4,81	4,83	4,90	4,92	4,88	4,85	4,75	4,65	4,57	4,52	4,50
15	5,51	4,23	4,24	4,26	4,28	4,27	4,26	4,21	4,16	4,11	4,09	4,07
16	5,91	3,65	3,63	3,63	3,65	3,65	3,66	3,66	3,65	3,63	3,61	3,60
17	6,28	3,07	3,07	3,07	3,07	3,07	3,07	3,07	3,07	3,07	3,07	3,07

Cavity cap JEDEC J1-21, IEC 67-III-2

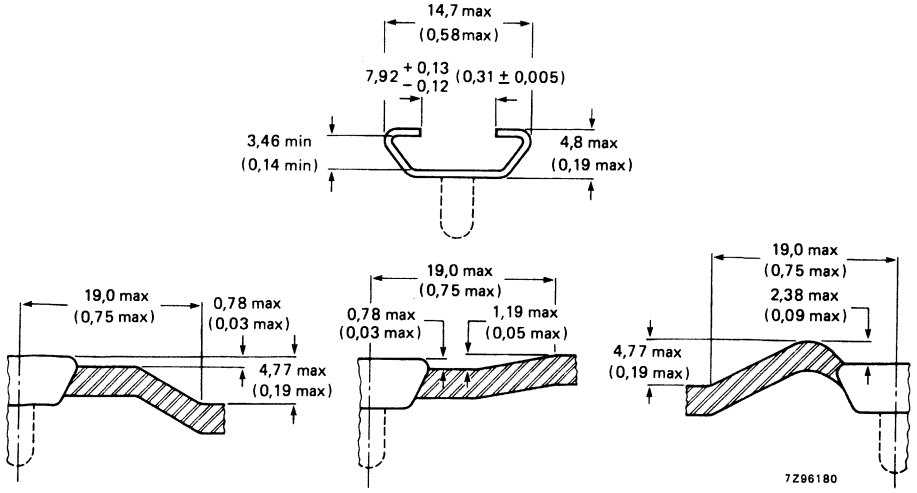

REFERENCE LINE GAUGE GR90CJ4

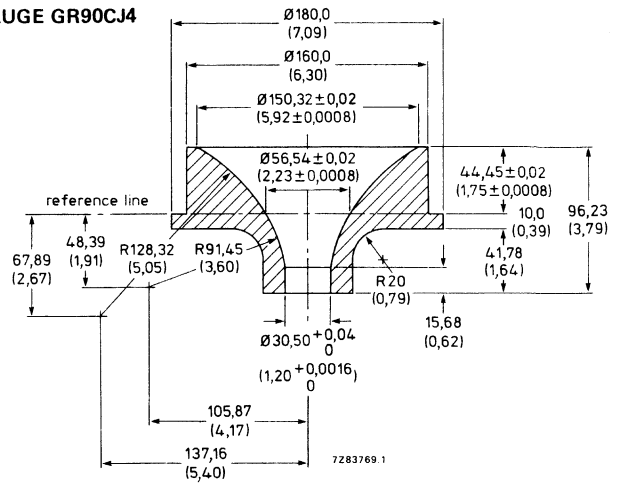

10-PIN BASE JEDEC B10-277

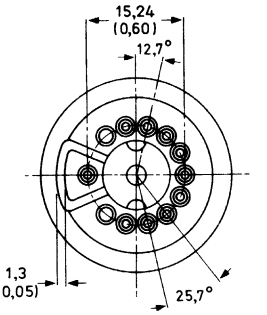

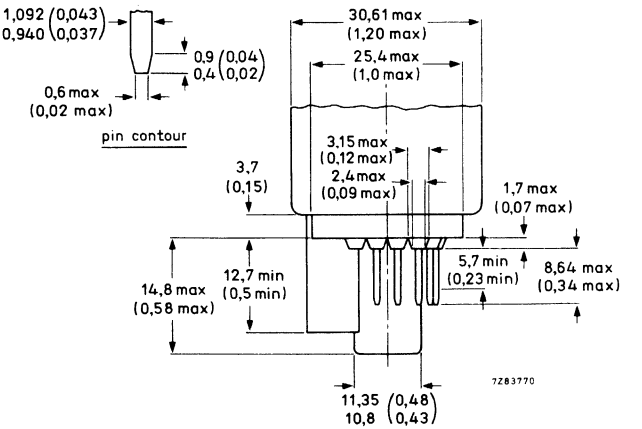

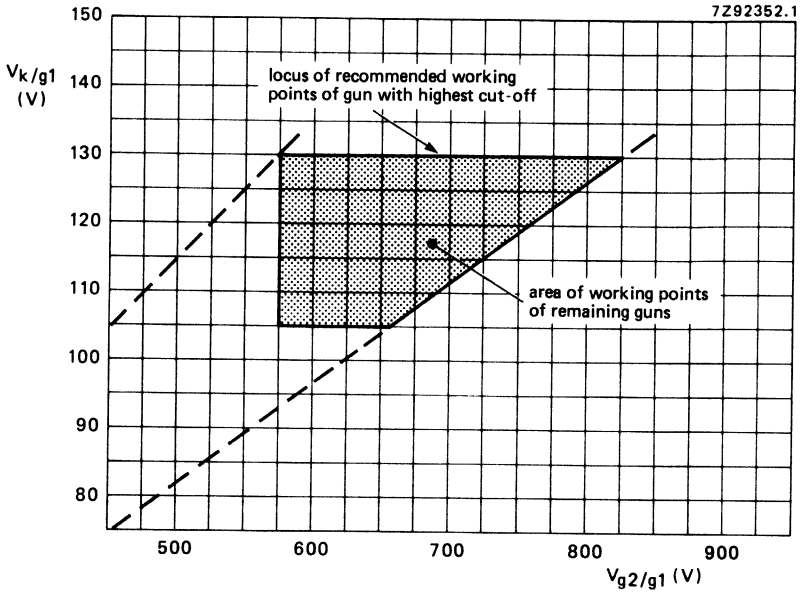

Spot cut-off design chart.

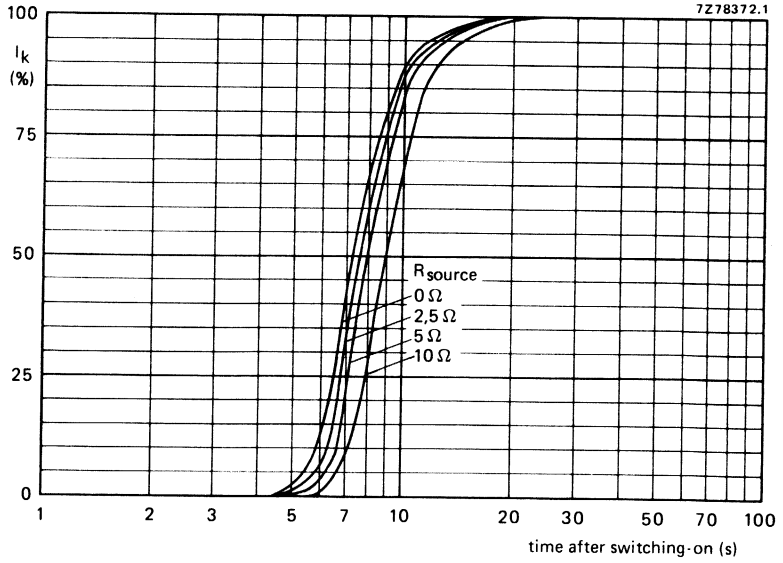

Cathode heating time to attain a certain percentage of the cathode current at equilibrium conditions.

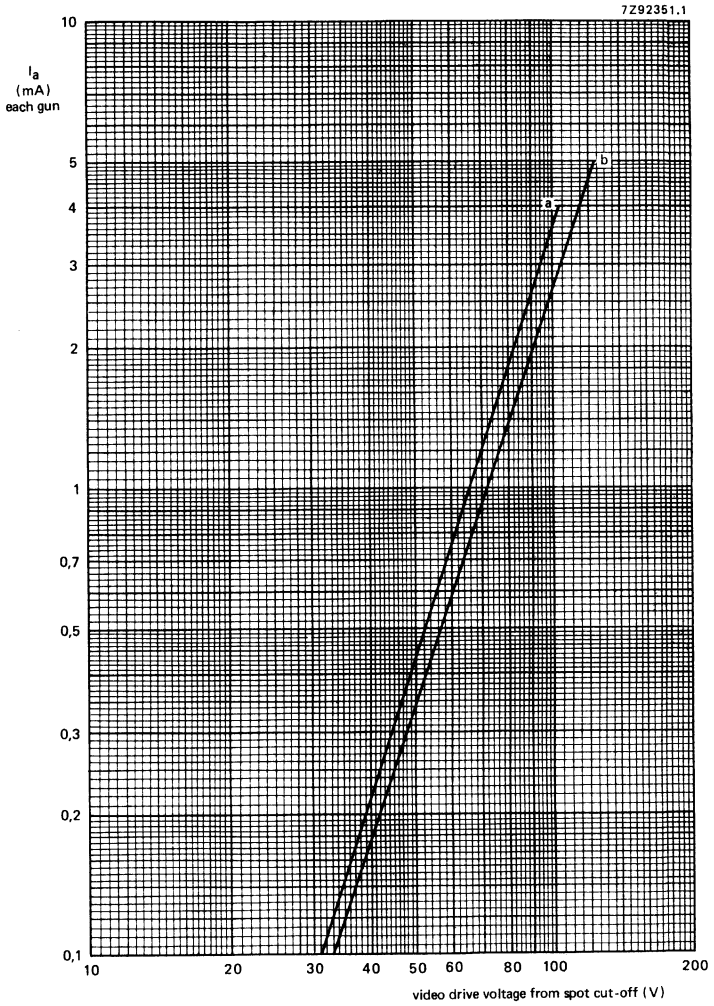

Typical cathode drive characteristic.

V_f = 6,3 V;

$V_{a,g4}$ = 30 kV;

V_{g3} adjusted for focus;

V_{g2} (each gun) adjusted to provide spot cut-off for V_k = 105 V (curve a) and V_k = 130 V (curve b).

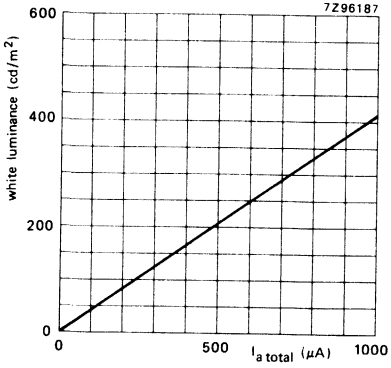

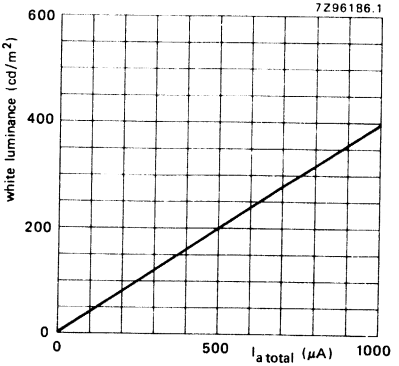

A51EBD00X

Luminance at the centre of the screen as a function of I_{total}.

$V_{a,g4}$ = 30 kV; V_f = 6,3 V; V_{g3} adjusted for optimum focus.
White-light output = 9300 K + 27 M.P.C.D.;
CIE co-ordinates x = 0,281, y = 0,311.
Raster size = 409,3 x 309,6 mm² (16,11 x 12,19 in²).

Luminance at the centre of the screen as a function of I_{total}.

$V_{a,g4}$ = 30 kV; V_f = 6,3 V; V_{g3} adjusted for optimum focus.
White-light output = 6500 K + 7 M.P.C.D.;
CIE co-ordinates x = 0,313, y = 0,329.
Raster size = 409,3 x 309,6 mm² (16,11 x 12,19 in²).

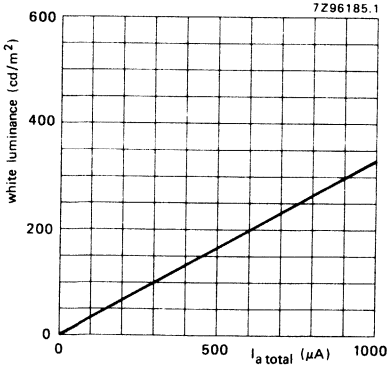

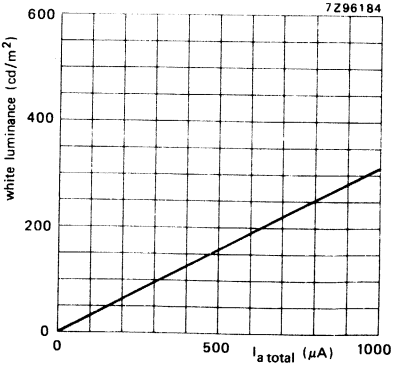

A51EBD10X

Luminance at the centre of the screen as a function of I_{total}.

$V_{a,g4}$ = 30 kV; V_f = 6,3 V; V_{g3} adjusted for optimum focus.
White-light output = 9300 K + 27 M.P.C.D.;
CIE co-ordinates x = 0,281, y = 0,311.
Raster size = 409,3 x 309,6 mm² (16,11 x 12,19 in²).

Luminance at the centre of the screen as a function of I_{total}.

$V_{a,g4}$ = 30 kV; V_f = 6,3 V; V_{g3} adjusted for optimum focus.
White-light output = 6500 K + 7 M.P.C.D.;
CIE co-ordinates x = 0,313, y = 0,329.
Raster size = 409,3 x 309,6 mm² (16,11 x 12,19 in²).

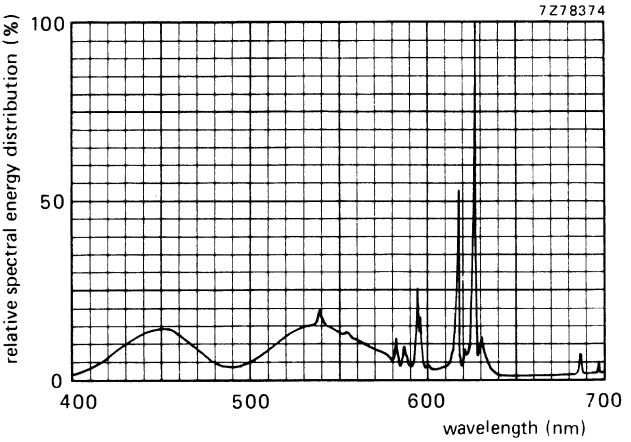

Simultaneous excitation of red, green and blue phosphor, measured in a tube, to produce white of x = 0,281, y = 0,311. Exact shape of the peaks depends on the resolution of the measuring apparatus.

Colour co-ordinates:	x	y
red	0,635	0,340
green	0,315	0,600
blue	0,150	0,060

90° FLAT SQUARE COLOUR PICTURE TUBE ASSEMBLIES

- Factory preset tube/coil assemblies
- Self-converging and raster correction free
- 51 cm, 90° colour picture tube A51EBD . . X
- Hybrid saddle toroidal deflection unit of the AT6030 series

QUICK REFERENCE DATA

Deflection angle	90°
Minimum useful screen diagonal	51 cm
Overall length	444 mm
Neck diameter	29,1 mm

AVAILABLE ASSEMBLIES

assembly type	assembly components
A51EBD00X40	tube A51EBD00X + deflection unit AT6030, type 1
A51EBD10X40	tube A51EBD10X + deflection unit AT6030, type 1

MECHANICAL DATA

Dimensions in mm

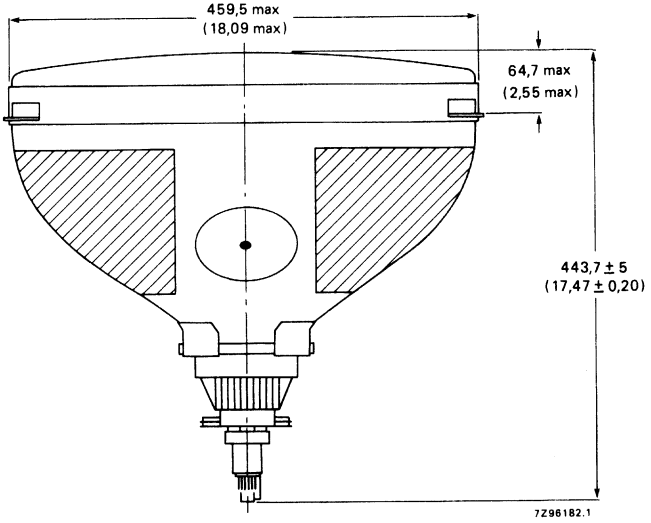

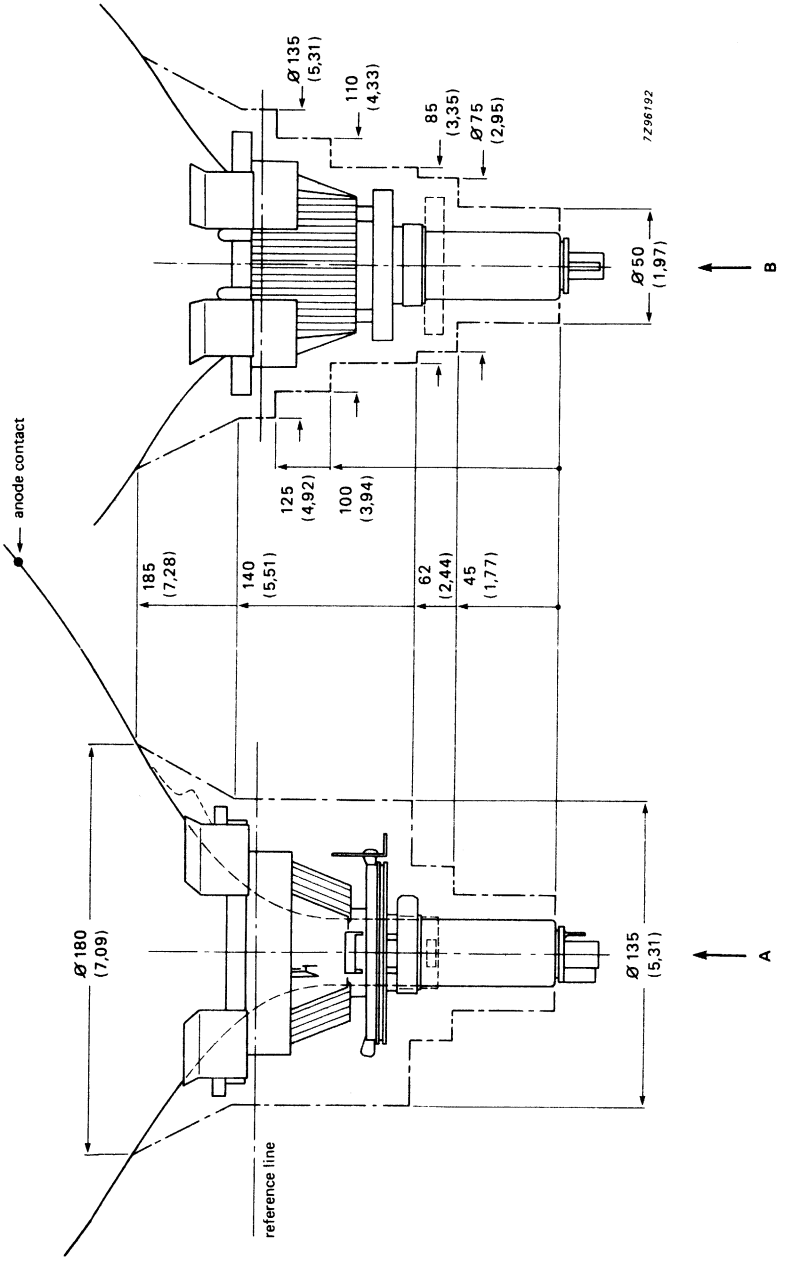

Yoke clearance.

ELECTRICAL DATA OF DEFLECTION UNIT

Line deflection coils	
inductance at 1 V (r.m.s.), 1 kHz	2,0 mH ± 4%
resistance at 25 °C	2,35 Ω ± 10%
magnetic flux	5,70 mWb ± 2,5%
Line deflection current, edge to edge, at 25 kV	2,85 A (p-p)
Field deflection coils	
inductance at 1 V (r.m.s.), 1 kHz	19,5 mH ± 10%
resistance at 25 °C	9,7 Ω ± 7%
Field deflection current, edge to edge, at 25 kV	1,09 A (p-p)
Cross-talk	a voltage of 10 V, 15625 Hz applied to the line coils causes no more than 0,2 V across the field coils (damping resistors included)
Insulation resistance at 1 kV (d.c.)	
between line and field coils	> 500 MΩ
between line coil and core clamp	> 500 MΩ
between field coil and core clamp	> 10 MΩ

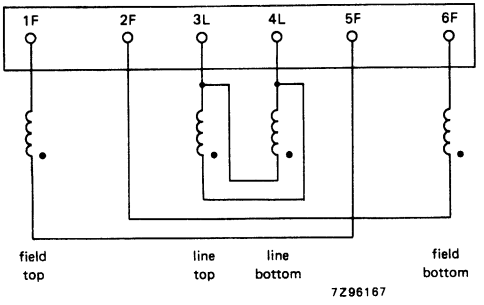

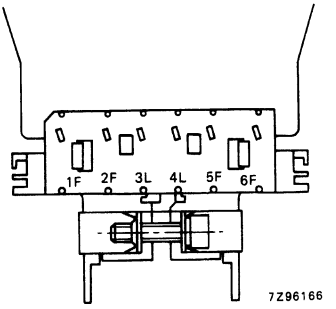

Connection diagram and top view of terminals of deflection unit AT6030, type 1. The beginning of the windings is indicated with ●.

FLAT SQUARE HIBRICON COLOUR PICTURE TUBES

- Flat and square screen
- 90° deflection
- In-line, hi-bi potential A R T* gun
- 29,1 mm neck diameter
- Mask with corner suspension
- Hibricon screen with pigmented phosphors featuring high brightness and increased contrast performance
- Quick-heating low-power cathodes
- Soft flash
- Slotted shadow mask optimized for minimum moiré at 525 lines system
- Internal magnetic shield
- Internal multipole
- Reinforced envelope for push-through mounting
- The tube is supplied with a matched hybrid saddle toroidal deflection unit of the AT6030 series; it forms a self-converging and raster correction free assembly

QUICK REFERENCE DATA

Deflection angle	90°
Minimum useful screen diagonal	51 cm
Overall length	444 mm
Neck diameter	29,1 mm
Heating	6,3 V, 310 mA
Focusing voltage	31% of anode voltage

Types A51EBS00X and A51EBS10X are identical, except for the light transmission of the face glass at centre: 64,5% for A51EBS00X, and 52,3% for A51EBS10X.

* Aberration Reducing Triode.

GENERAL DATA

1. ELECTRICAL

Electron guns		unitized triple-aperture electrodes; aberration reducing triode
Heating		
heater voltage	V_f	6,3 V
heater current	I_f	310 mA
Focusing method		electrostatic
Focus lens		hi-bi-potential
Convergence method		magnetic
Deflection method		magnetic
Deflection angles (approx.)		
diagonal		90 deg
horizontal		78 deg
vertical		60 deg
Direct interelectrode capacitances (approx.)		
grid 1 to all other electrodes	C_{g1}	17 pF
all cathodes to all other electrodes	C_k	15 pF
each cathode to all other electrodes	C_{kR}, C_{kG}, C_{kB}	5 pF
grid 3 to all other electrodes	C_{g3}	6 pF
grid 2 to all other electrodes	C_{g2}	4,5 pF
anode to external conductive coating, including rim band	$C_{a(m+m')}$	$<$ 2200 pF $>$ 1600 pF
Resistance between rimband and external conductive coating		$\geqslant$ 50 MΩ

2. OPTICAL

Screen	metal-backed vertical phosphor stripes; phosphor lines follow glass contour
Screen finish	high polish
Useful screen dimensions	
diagonal	min. 510,0 mm (20,08 in)
horizontal axis	min. 409,3 mm (16,11 in)
vertical axis	min. 309,6 mm (12,19 in)
area	min. 1253 cm² (194,22 in²)
Positional accuracy of the screen with respect to the glass contour	see Figure on the next page
Phosphors	
red	pigmented europium activated rare earth
green	sulphide type
blue	pigmented sulphide type
Persistence	medium short

Colour co-ordinates	x	y
red	0,635	0,340
green	0,315	0,600
blue	0,150	0,060

A = 171,7 mm (6,76 in)
B = 223,7 mm (8,81 in)
C = 115,6 mm (4,55 in)
D = 173,9 mm (6,85 in)
E = 23,5 mm (0,93 in)

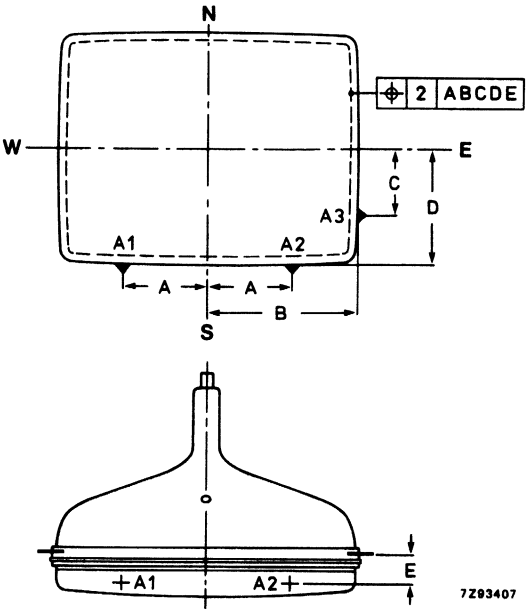

Centre-to-centre distance of vertical identical colour phosphor stripes, at screen centre	approx. 0,69 mm (0,027 in)
Light transmission of face glass at centre	
A51EBS00X	64,5%
A51EBS10X	52,3%

3. MECHANICAL (see also the figures on pages 12, 13 and 14)

Overall length	443,7 ± 5 mm (17,47 ± 0,20 in)
Neck diameter	$29{,}1\ ^{+1{,}4}_{-0{,}7}$ mm ($1{,}15\ ^{+0{,}06}_{-0{,}03}$ in) *
Bulb dimensions	
diagonal	max. 546,1 mm (21,5 in)
width	max. 455,6 mm (17,9 in)
height	max. 359,6 mm (14,16 in)
Base designation	JEDEC B10-277
Anode contact designation	recessed small cavity cap (JEDEC no. J1-21; IEC 67-III-2)
Bulb	
funnel	EIAJ-J540F1
panel	to be established
Implosion protection	reinforced envelope for push-through
Mass	15 kg (33 lbs)
Mounting position	anode contact on top

* In the region of 78,5 mm (3,09 in) from the neck end, the maximum diameter is 30 mm (1,18 in).

RATINGS AND ELECTRICAL DATA

1. LIMITING VALUES (Design maximum rating system unless otherwise stated)

Unless otherwise specified, voltage values are for each gun and values are positive with respect to grid 1.

Anode voltage	$V_{a,g4}$	max.	30 kV	notes 1 and 2
		min.	20 kV	note 3
Long-term average current for three guns	I_a	max.	1000 μA	note 4
Grid 3 (focusing electrode) voltage	V_{g3}	max.	11 kV	
Grid 2 voltage	V_{g2}	max.	1200 V	note 5
Cathode voltage				
positive	V_k	max.	400 V	
positive operating cut-off	V_k	max.	200 V	
negative	$-V_k$	max.	0 V	
negative peak	$-V_{kp}$	max.	2 V	
Cathode to heater voltage				
positive	V_{kf}	max.	250 V	
positive peak	V_{kfp}	max.	300 V	note 1
negative	$-V_{kf}$	max.	135 V	
negative peak	$-V_{kfp}$	max.	180 V	note 1
Heater voltage	V_f	6,3 V	+ 5% −10%	notes 1 and 6

Notes

1. Absolute maximum rating system.
2. During adjustment on the production line this value is likely to be surpassed considerably. It is therefore strongly recommended to first make the necessary adjustments for normal operation without picture tube.
3. Operation of the tube at lower voltages impairs the luminance and resolution, and could impair convergence.
4. The short-term average anode current should be limited by circuitry to 1500 μA.
5. During adjustment on the production line max. 1500 V is permitted.
6. For maximum cathode life it is recommended that the heater supply be designed for 6,3 V at zero beam current.

2. EQUIPMENT DESIGN RANGES

Unless otherwise specified, values are for each gun and voltage values are positive with respect to grid 1.

For anode voltages between 20 kV and 30 kV:

Grid 3 (focusing electrode) voltage	V_{g3}	29% to 33% of anode voltage
Grid 2 voltage and cathode voltage for visual extinction of undeflected focused spot	V_{g2}, V_k	see cut-off design chart, page 19; note 1
Maximum ratio of cathode voltage highest gun to lowest gun in any tube		1,25
Video drive characteristics		see graphs on page 20; note 2
Grid 3 current	I_{g3}	−2 to + 2 μA
Grid 2 current	I_{g2}	−2 to + 2 μA
Grid 1 current, under cut-off condition	I_{g1}	−2 to + 2 μA

	white D 6500K + 7 M.P.C.D			9300K + 27 M.P.C.D.		
To produce white of the following CIE co-ordinates	x 0,313			0,281		
	y 0,329			0,311		
Percentage of total anode current supplied by each gun (typical)	red	green	blue	red	green	blue
	38,3	35,8	25,9%	27,9	39,1	33,0%
Ratio of anode current	min.	typ.	max.	min.	typ.	max.
red to blue	1,1	1,5	1,9	0,6	0,9	1,2
red to green	0,8	1,1	1,4	0,5	0,7	1,0
blue to green	0,5	0,7	1,0	0,6	0,9	1,2

Notes

1. The common V_{g2} should be adjusted as follows:
   Set the cathode voltage, V_k, for each gun at 130 V. Increase the V_{g2} from about 575 V to the value at which the raster of one of the guns becomes just visible. Now decrease the V_k of the remaining guns so that the rasters of these guns also become visible.
2. For optimum picture performance it is recommended that the cathodes are not driven below +1 V.

3. EXAMPLE OF USE OF DESIGN RANGES

Unless otherwise specified, voltage values are for each gun and are positive with respect to grid 1.

Anode voltage	$V_{a,g4}$	27,5 kV	
Grid 3 (focusing electrode) voltage	V_{g3}	8,0 to 9,1 kV	
Grid 2 voltage when circuit design utilizes cathode voltage of 130 V for visual extinction of focused spot	V_{g2}	575 to 825 V	
Heater voltage, under operating conditions	V_f	6,3 V	note 1

	A51EBS00X	A51EBS10X	
Luminance at the centre of the screen L	204 cd/m² (59,64 foot lambert)	165 cd/m² (48,24 foot lambert)	note 2
	198 cd/m² (57,89 foot lambert)	160 cd/m² (46,78 foot lambert)	note 3

4. BEAM CORRECTIONS

Maximum centring error in any direction after colour purity, static convergence, and horizontal centre line correction, measured with deflection coils in nominal position: 4 mm (0,16 in)

5. LIMITING CIRCUIT VALUES

High voltage circuits

To minimize the possibility of damage to the circuit caused by a momentary internal arc, it is recommended that the high-voltage power supply and the grid 3 power supply be of the limited energy type.

Grid 3 circuit resistance	R_{g3}	max.	70 MΩ
Grid 1 to cathode circuit resistance (each gun)	R_{g1k}	max.	0,75 MΩ

Notes

1. The tube has quick-heating cathodes; if standby conditions are still required operate at 5,0 V.
2. Tube settings adjusted to produce white of 9300K + 27 M.P.C.D. (x = 0,281, y = 0,311), focused raster, current density 0,4 $\mu A/cm^2$.
3. Tube settings adjusted to produce white of 6500K + 7 M.P.C.D. (x = 0,313, y = 0,329), focused raster, current density 0,4 $\mu A/cm^2$.

6. DEGAUSSING

The picture tube has an internal magnetic shield. This shield and the shadow mask with its suspension system may be provided with an automatic degaussing system, consisting of two coils covering top and bottom cone parts, or one large coil.

For proper degaussing an initial magnetomotive force (m.m.f.) of 300 ampere-turns* is required in each of the coils. This m.m.f. has to be gradually decreased by appropriate degaussing circuitry. In the steady state, no significant m.m.f. should remain in the coils ($\leqslant$ 0,3 ampere-turns**).

If single-phase power rectification is employed in the t.v. circuitry, provision should be included to prevent asymmetric distortion of the a.c. voltage applied to the degaussing circuit due to high d.c. inrush currents.

Examples of a double-coil and of a single-coil system are given below.

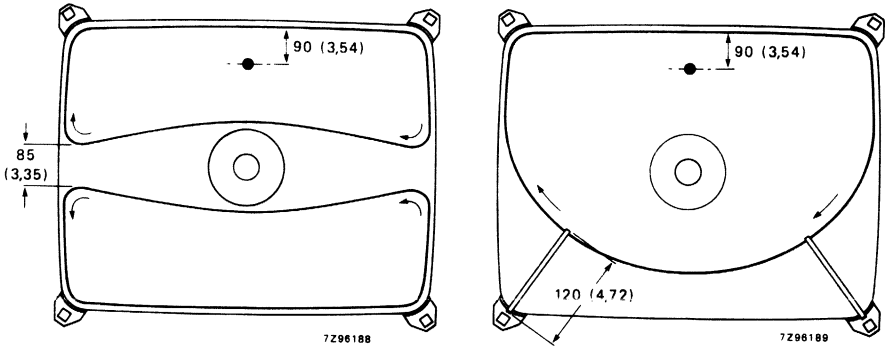

Position of degaussing coils on the picture tube.

Degaussing circuit using dual PTC thermistor 2322 662 98009; C = 100 nF, for double-coil system, optional for single-coil system.

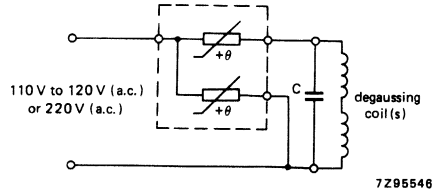

Data of degaussing coil

	double-coil system	single-coil system
Circumference	125 cm (49 in)	139 cm (54 in)
Number of turns	60	140
Copper-wire diameter	0,4 mm (0,016 in)	0,4 mm (0,016 in)
Aluminium-wire diameter	0,5 mm (0,02 in)	0,5 mm (0,02 in)
Resistance	22 Ω (two coils in series)	27 Ω

* For double-coil system; 700 ampere-turns for single-coil system.
** For double-coil system; $\leqslant$ 0,6 ampere-turns for single-coil system.

7. FLASHOVER PROTECTION

With the high voltage used with this tube (max. 30 kV) internal flashovers may occur. As a result of the Soft-Flash technology these flashover currents are limited to approx. 60 A offering higher set reliability, optimum circuit protection and component savings.
Primary protective circuitry using properly grounded spark gaps and series isolation resistors (preferably carbon composition) is still necessary to prevent tube damage. The spark gaps should be connected to all picture tube electrodes at the socket according to the figure below; they are not required on the heater pins. No other connections between the outer conductive coating and the chassis are permissible. The spark gaps should be designed for a breakdown voltage at the focusing electrode (g3) of 13,5 kV (1,5 x V_{g3} max. at $V_{a,g4}$ = 27,5 kV), and at the other electrodes of 1,5 to 2 kV.
The values of the series isolation resistors should be as high as possible (min. 1,5 kΩ) without causing deterioration of the circuit performance. The resistors should be able to withstand an instantaneous surge of 20 kV for the focusing circuit and 12 kV for the remaining circuits without arcing. Additional information is available on request.

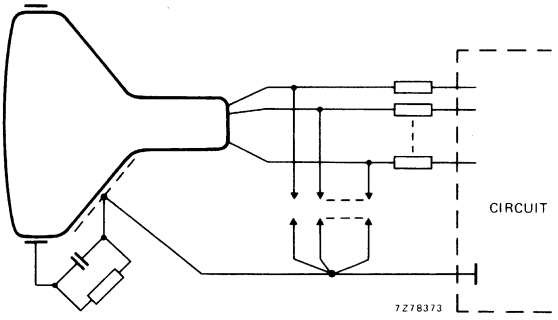

X-RADIATION LIMIT

Maximum anode voltage at which the X-radiation emitted will not exceed 0,5 mR/h at an anode current of 300 μA

entire tube	35,5 kV *
face-plate only	37 kV

Warning:

If the value for the tube face only is used as design criterion, adequate shielding must be provided in the receiver for the anode contact and/or certain portions of the tube funnel and panel skirt to insure that the X-radiation from the receiver is attenuated to a value equal to or lower than that specified for the face of the tube.

Maximum voltage difference between anode and focus electrode at which the X-radiation will not exceed 0,5 mR/h 30 kV

Warning:

If the voltage value above can be exceeded in the receiver, additional attenuation of the X-radiation through the tube neck may be required.

The X-radiation emitted from this picture tube, as measured in accordance with the procedure of JEDEC Publication No. 64D, will not exceed 0,5 mR/h throughout the useful tube life when operated within the 'Design maximum ratings'.

The tube should not be operated beyond its 'Design maximum ratings' stated above, but its X-radiation will not exceed 0,5 mR/h for anode voltage and current combinations given by the isoexposure-rate limits characteristics shown on the next page.

Operation above the values shown by the curve may result in failure of the television receiver to comply with the Federal Performance Standard of the U.S. for Television Receivers, Section 1020-10 of Part 1020 of Title 21, Code of Federal Regulation (PL90-602) as published in the Federal Register Volume 38, No. 198, Monday, October 15, 1973.

Maximum X-radiation as a function of anode voltage at 300 μA anode current is shown by the curve on the next page. X-radiation at a constant anode voltage varies linearly with anode current.

* This rating applies only if the anode connector used by the set maker provides the necessary attenuation to reduce the X-radiation from the anode contact by a factor equal to the difference between the anode button isoexposure-rate limit curve and the isoexposure-rate limit curve for the entire tube.

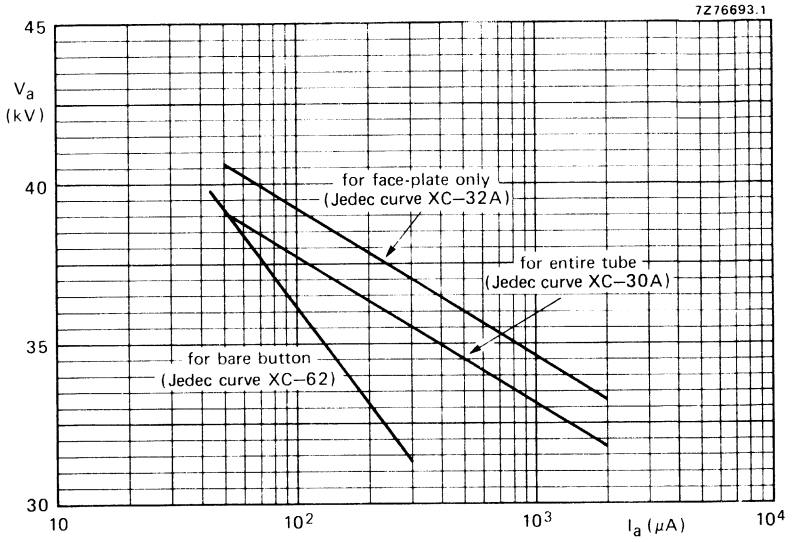

0,5 mR/h isoexposure-rate limit curve.

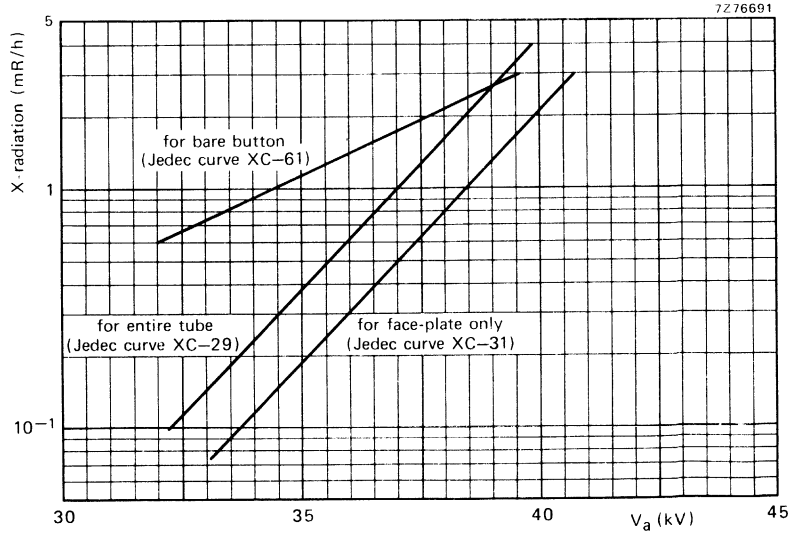

X-radiation limit curve at a constant anode current of 300 μA.

WARNINGS

X-radiation

Operation of this colour picture tube at abnormal conditions which exceed the 0,5 mR/h iso-dose rate curve shown on the preceding page may produce soft X-rays which may constitute a health hazard on prolonged exposure at close range unless adequate external screening is provided. Precautions must therefore be exercised during servicing of TV receivers employing this tube to assure that the anode voltage and other tube voltages are adjusted to the recommended values so that the 'Design maximum ratings' will not be exceeded.

Tube replacement

This picture tube employs integral X-radiation and implosion protection and must be replaced with a tube of the same type number or a recommended replacement to assure continued safety.

Shock hazard

The high voltage at which the tube is operated may be very dangerous. The design of the TV receiver should include safeguards to prevent the user from coming in contact with the high voltage. Extreme care should be taken in the servicing or adjustment of any high-voltage circuit.

Caution must be exercised during the replacement or servicing of the picture tube since a residual electrical charge may be contained on the high-voltage capacitor formed by the external and internal conductive coatings of the picture tube funnel. To remove any residual high-voltage charges from the picture tube, 'bleed-off the charge by shorting the anode contact button, located in the funnel of the picture tube, to the external conductive coating before handling the tube. Discharging the high voltage to isolated metal parts such as cabinets and control brackets may produce a shock hazard.

Tube handling

Picture tubes should be kept in the shipping box or similar protective container until just prior to installation. Wear heavy protective clothing, including gloves and safety goggles with side shields, in areas containing unpacked and unprotected tubes to prevent possible injury from flying glass in the event a tube breaks. Handle the picture tube with extreme care. Do not strike, scratch or subject the tube to more than moderate pressure. Particular care should be taken to prevent damage to the seal area.

The receiver mounting system should incorporate sufficient cushioning so that under normal conditions of shipment or handling an impact acceleration of more than 35g is never applied to the tube.

MECHANICAL DATA

The dimensions are given in mm, and in inches between brackets.

Notes are on page 15.

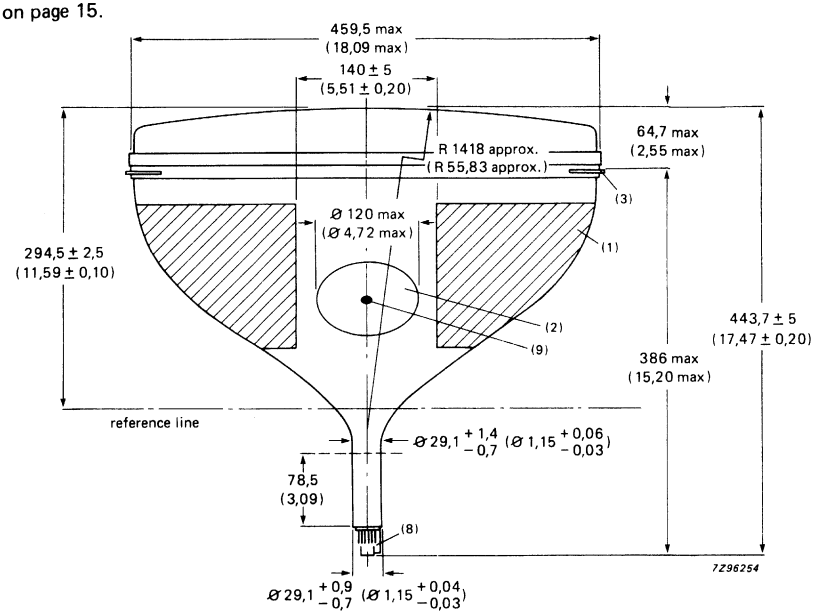

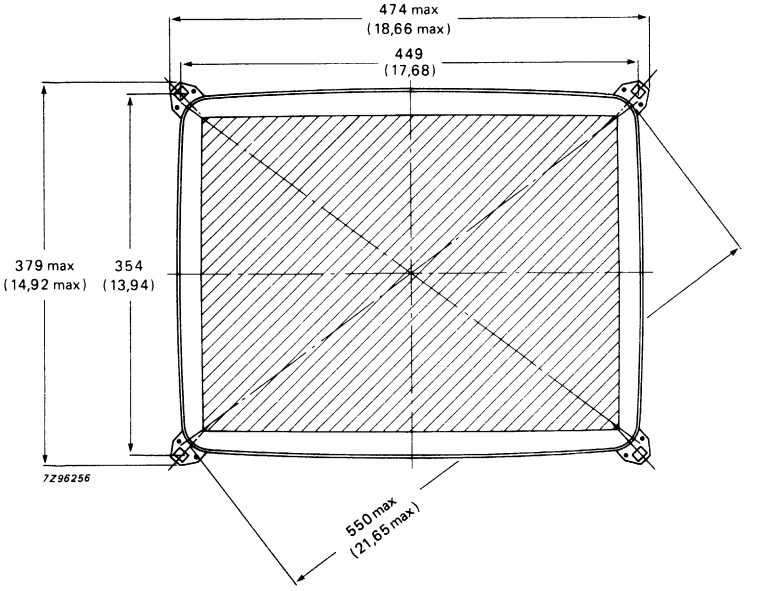

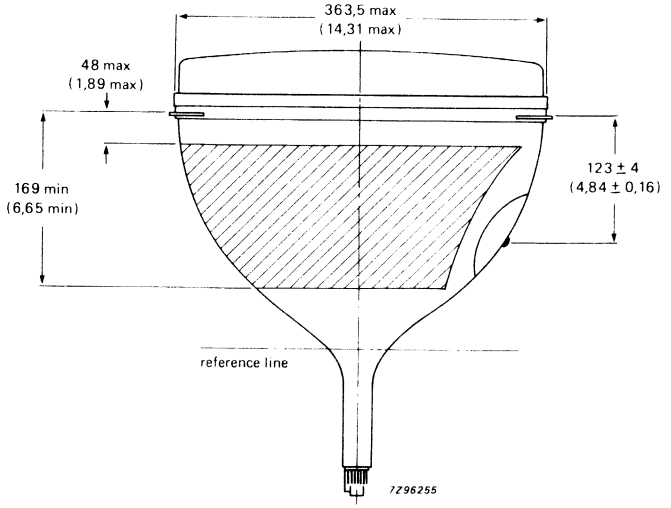
363,5 max
(14,31 max)
48 max
(1,89 max)
169 min
(6,65 min)
123 ± 4
(4,84 ± 0,16)
reference line
7Z96255

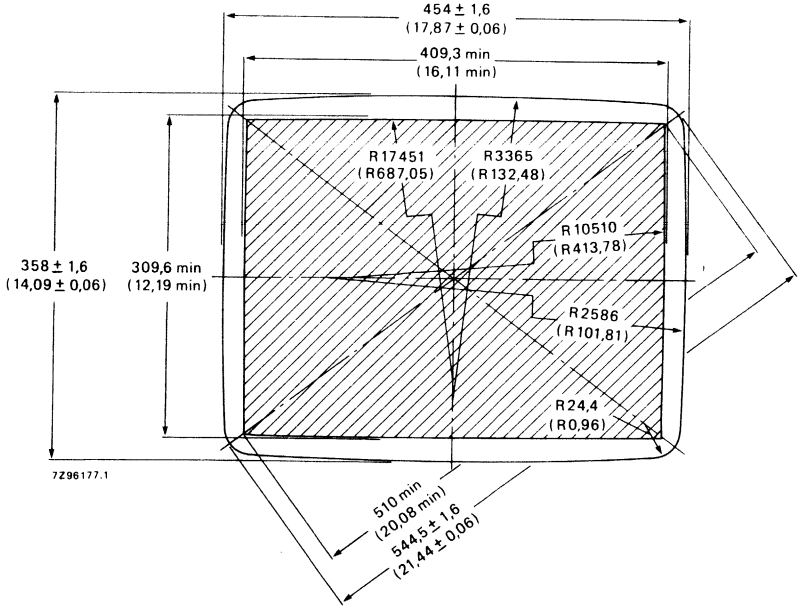
454 ± 1,6
(17,87 ± 0,06)
409,3 min
(16,11 min)
R17451
(R687,05)
R3365
(R132,48)
R10510
(R413,78)
358 ± 1,6
(14,09 ± 0,06)
309,6 min
(12,19 min)
R2586
(R101,81)
R24,4
(R0,96)
7Z96177.1
510 min
(20,08 min)
544,5 ± 1,6
(21,44 ± 0,06)

MECHANICAL DATA (continued)

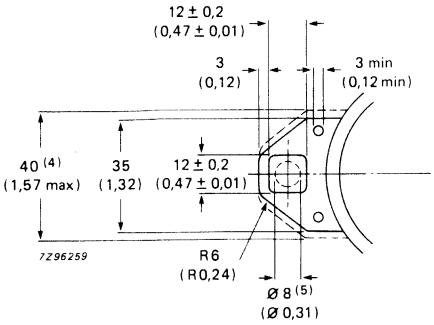

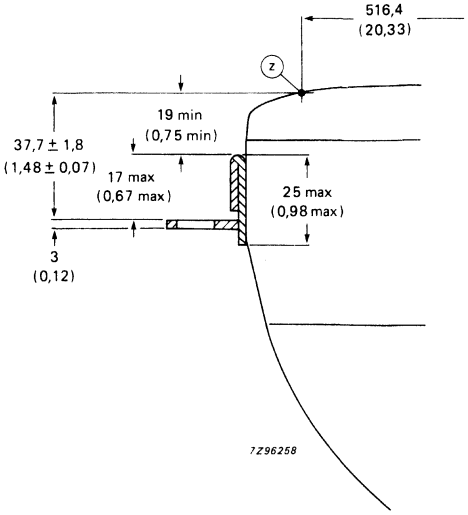

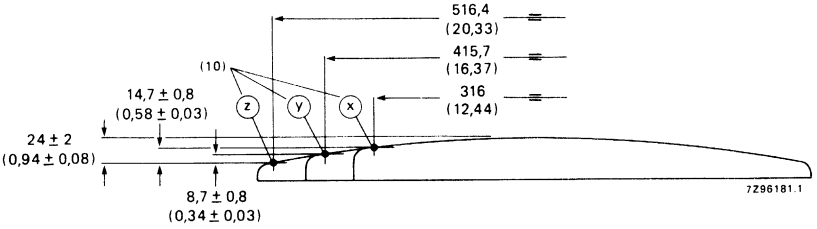

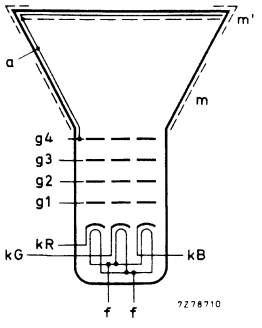

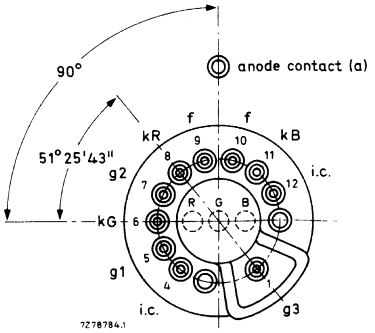

i.c. = internally connected
(not to be used)

Notes to outline drawings on the preceding pages

1. Configuration of outer conductive coating may be different but will contain the contact area as shown in the drawing.
2. To clean this area, wipe only with a soft lintless cloth.
3. The displacement of any lug with respect to the plane through the three other lugs is max. 1,3 mm (0,05 in). This deviation is incorporated in the tolerance of ± 1,8 mm (0,07 in).
4. Minimum space to be reserved for mounting lug.
5. The position of the mounting screw in the cabinet must be within a circle of 8 mm diameter drawn around the true geometrical positions, i.e. the corners of a rectangle of 354 mm (13,94 in) x 449 mm (17,68 in).
6. Not applicable.
7. Not applicable.
8. The socket for this base should not be rigidly mounted; it should have flexible leads and be allowed to move freely. After mounting of the tube in the cabinet note that the position of the base can fall within a circle, having a diameter of max. 50 mm (1,968 in), concentric with an imaginary tube axis.
9. Small cavity contact J1-21, IEC 67-III-2.
10. The X, Y and Z reference points are located on the outside surface of the face plate 3,2 mm (0,13 in) beyond the intersection of the minor, major and diagonal screen axis respectively, with the minimum published screen.

Sagittal heights with reference to screen centre at the edge of the minimum useful screen

coordinates		sagittal
x	y	height
mm	mm	mm
0	154,8	8,9
20	154,8	9,0
40	154,8	9,3
60	154,7	10,0
80	154,6	10,9
100	154,5	12,1
120	154,4	13,6
140	154,2	15,4
160	154,1	17,5
180	153,9	20,0
200	153,7	22,8
203,5	153,6	23,4
203,6	150	23,0
203,7	140	21,9
204,0	120	20,0
204,2	100	18,4
204,4	80	17,1
204,5	60	16,1
204,6	40	15,4
204,6	20	15,0
204,7	0	14,9

coordinates		sagittal
x	y	height
inch	inch	inch
0	6,09	0,35
0,79	6,09	0,35
1,57	6,09	0,37
2,36	6,09	0,39
3,15	6,09	0,43
3,94	6,08	0,48
4,72	6,08	0,54
5,51	6,07	0,61
6,30	6,07	0,69
7,09	6,06	0,79
7,87	6,05	0,90
8,01	6,05	0,92
8,02	5,91	0,91
8,02	5,51	0,86
8,03	4,72	0,79
8,04	3,94	0,72
8,05	3,15	0,67
8,05	2,36	0,63
8,06	1,57	0,61
8,06	0,79	0,59
8,06	0	0,59

Maximum cone contour

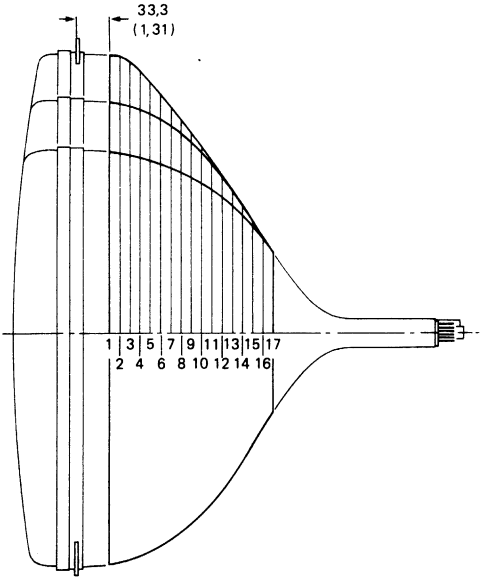

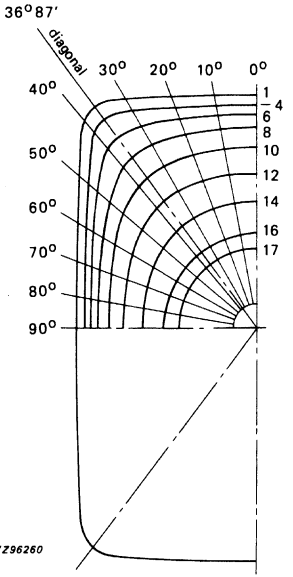

Dimensions in mm

section	nom. distance from section 1	max. distance from centre										
		0°	10°	20°	30°	diag.	40°	50°	60°	70°	80°	90°
1	0	225,7	228,9	239,1	257,6	271,8	267,2	227,9	203,1	187,9	179,6	177,0
2	10	224,6	227,7	237,7	255,9	270,0	265,3	226,7	201,9	186,8	178,6	175,9
3	20	221,8	224,8	234,3	251,1	264,3	259,6	222,9	198,9	184,2	176,1	173,5
4	30	218,1	220,9	229,6	244,5	254,7	250,6	217,9	195,1	180,9	173,1	170,6
5	40	213,8	216,4	224,1	236,5	243,1	239,6	212,0	190,9	177,3	169,9	167,5
6	50	208,7	211,0	217,7	227,5	231,3	228,4	205,6	186,3	173,6	166,5	164,2
7	60	202,6	204,5	210,0	217,5	219,5	217,0	198,5	181,0	169,3	162,6	160,5
8	70	195,1	196,8	201,3	206,9	207,6	205,4	190,3	175,1	164,4	158,3	156,3
9	80	186,2	187,6	191,4	195,6	195,4	193,5	181,3	168,4	158,9	153,3	151,5
10	90	175,6	176,9	180,1	183,3	182,8	181,1	171,4	160,7	152,5	147,6	146,0
11	100	163,6	164,6	167,4	169,9	169,2	167,9	160,4	151,9	145,2	141,0	139,6
12	110	150,3	151,3	153,8	155,7	154,7	153,6	147,9	141,7	136,6	133,4	132,3
13	120	136,4	137,3	139,3	140,4	139,5	138,6	134,5	130,3	126,8	124,6	123,9
14	130	122,1	122,8	124,4	124,9	124,0	123,3	120,7	118,2	116,1	114,7	114,3
15	140	107,5	107,7	108,2	108,6	108,4	108,2	107,0	105,7	104,5	103,8	103,5
16	150	92,6	92,3	92,3	92,6	92,8	92,9	92,9	92,6	92,1	91,6	91,4
17	159,5	78,1	78,1	78,1	78,1	78,1	78,1	78,1	78,1	78,1	78,1	78,1

Dimensions in inches

section	nom. distance from section 1	max. distance from centre										
		0°	10°	20°	30°	diag.	40°	50°	60°	70°	80°	90°
1	0	8,89	9,01	9,41	10,14	10,70	10,52	8,97	8,00	7,40	7,07	6,97
2	0,39	8,84	8,96	9,36	10,07	10,63	10,44	8,93	7,95	7,35	7,03	6,93
3	0,79	8,73	8,85	9,22	9,89	10,41	10,22	8,78	7,83	7,25	6,93	6,83
4	1,18	8,59	8,70	9,04	9,63	10,03	9,87	8,58	7,68	7,12	6,81	6,72
5	1,57	8,42	8,52	8,82	9,31	9,57	9,43	8,35	7,52	6,98	6,69	6,59
6	1,97	8,22	8,31	8,57	8,96	9,11	8,99	8,09	7,33	6,83	6,56	6,46
7	2,36	7,98	8,05	8,27	8,56	8,64	8,54	7,81	7,13	6,67	6,40	6,32
8	2,76	7,68	7,75	7,93	8,15	8,17	8,09	7,49	6,89	6,47	6,23	6,15
9	3,15	7,33	7,39	7,54	7,70	7,69	7,62	7,14	6,63	6,26	6,04	5,96
10	3,54	6,91	6,96	7,09	7,22	7,20	7,13	6,75	6,33	6,00	5,81	5,75
11	3,94	6,44	6,48	6,59	6,69	6,66	6,61	6,31	5,98	5,72	5,55	5,50
12	4,33	5,92	5,96	6,06	6,13	6,09	6,05	5,82	5,58	5,38	5,25	5,21
13	4,72	5,37	5,41	5,48	5,53	5,49	5,46	5,30	5,13	4,99	4,91	4,88
14	5,12	4,81	4,83	4,90	4,92	4,88	4,85	4,75	4,65	4,57	4,52	4,50
15	5,51	4,23	4,24	4,26	4,28	4,27	4,26	4,21	4,16	4,11	4,09	4,07
16	5,91	3,65	3,63	3,63	3,65	3,65	3,66	3,66	3,65	3,63	3,61	3,60
17	6,28	3,07	3,07	3,07	3,07	3,07	3,07	3,07	3,07	3,07	3,07	3,07

Cavity cap JEDEC J1-21, IEC 67-III-2

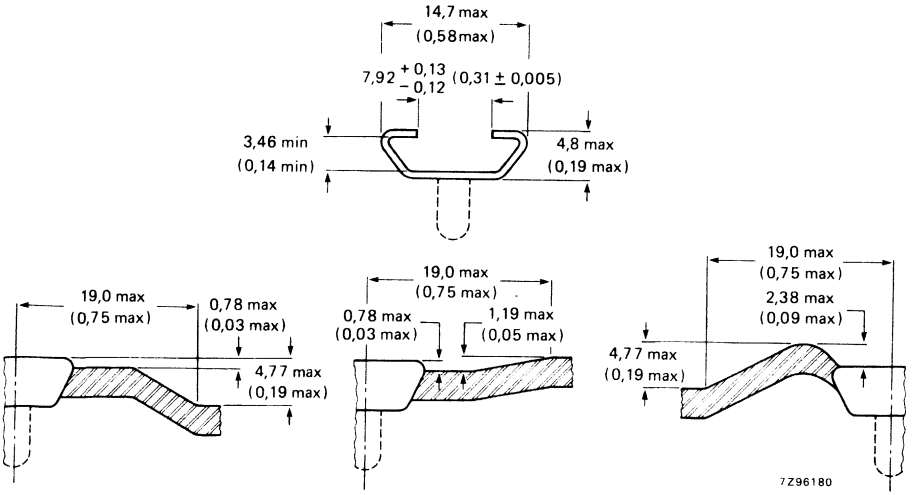

REFERENCE LINE GAUGE GR90CJ4

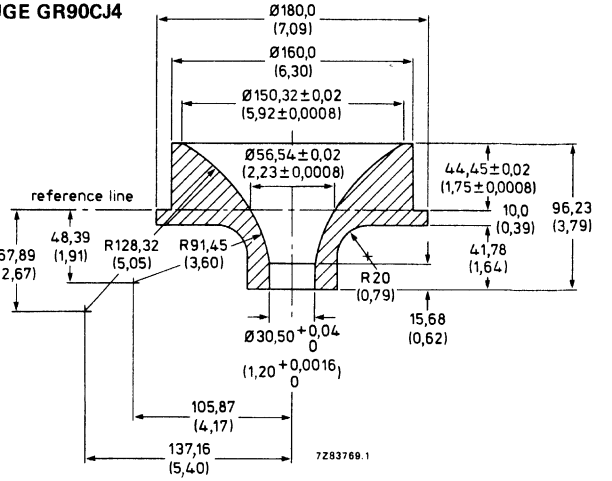

10-PIN BASE JEDEC B10-277

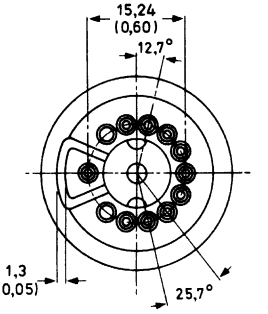

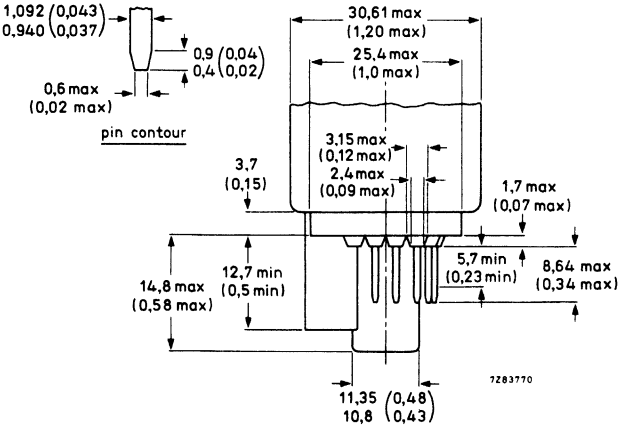

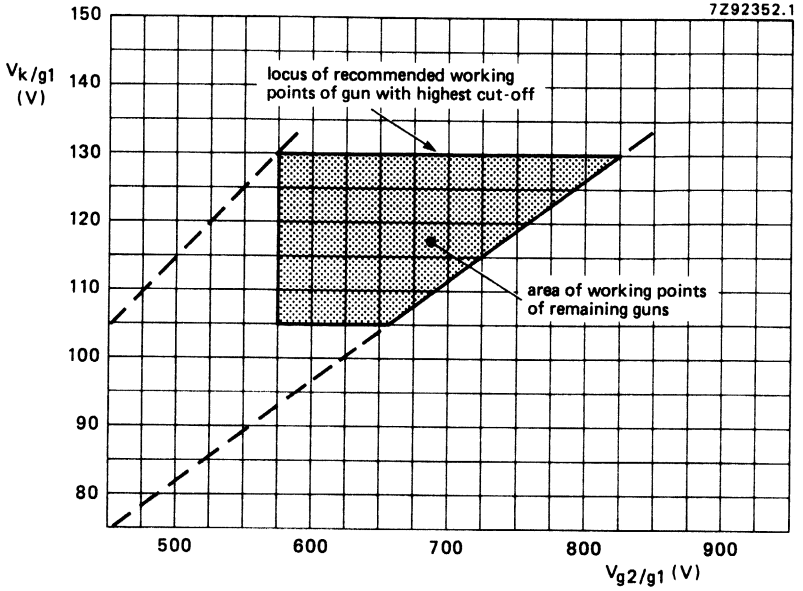

Spot cut-off design chart.

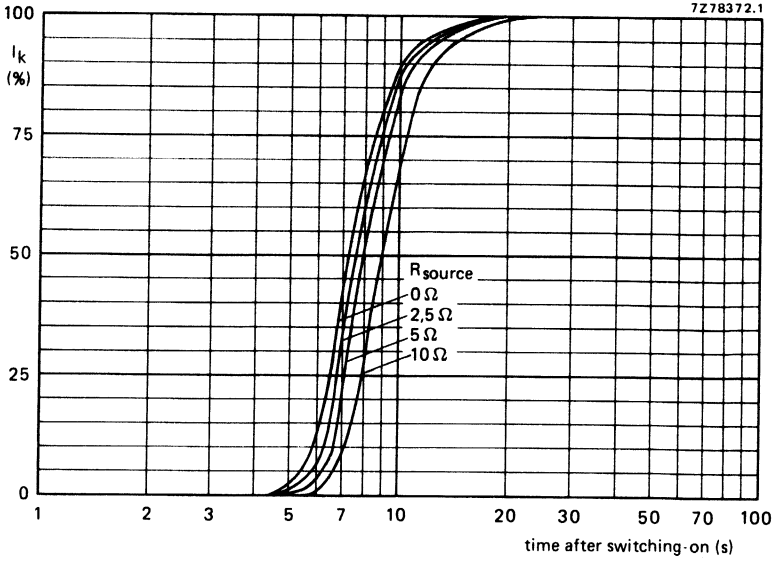

Cathode heating time to attain a certain percentage of the cathode current at equilibrium conditions.

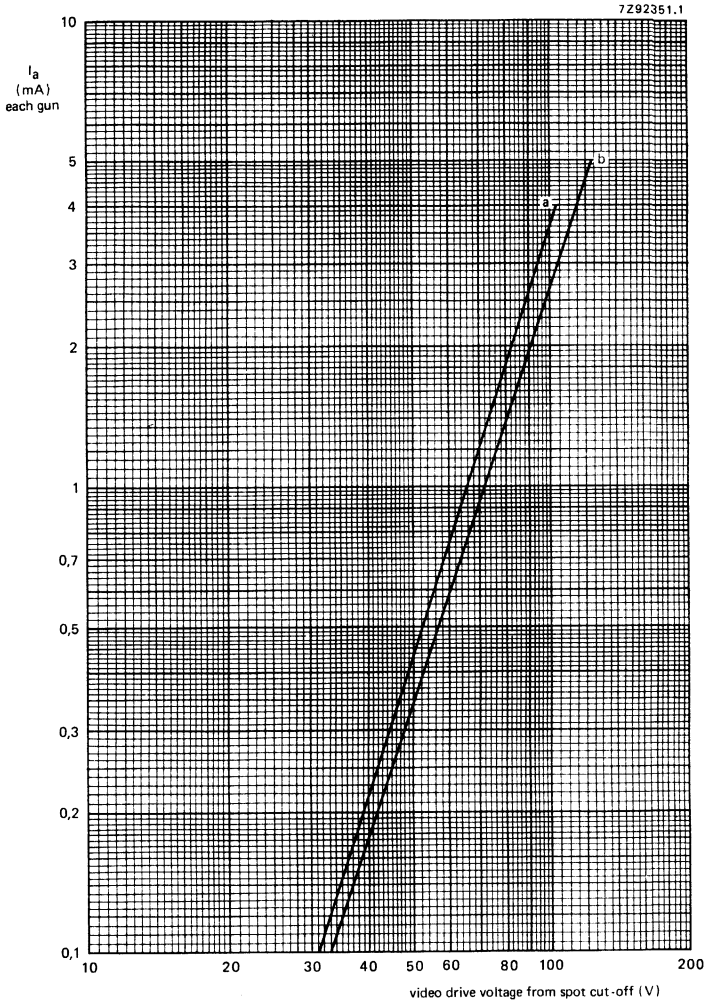

Typical cathode drive characteristic.

V_f = 6,3 V;

$V_{a,g4}$ = 30 kV;

V_{g3} adjusted for focus;

V_{g2} (each gun) adjusted to provide spot cut-off for V_k = 105 V (curve a) and V_k = 130 V (curve b).

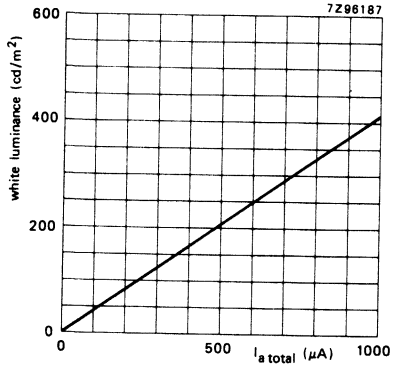

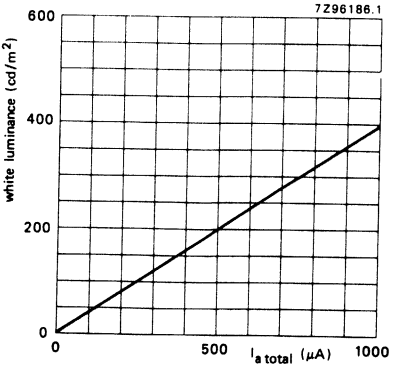

A51EBS00X

Luminance at the centre of the screen as a function of I_{total}.

$V_{a,g4}$ = 30 kV; V_f = 6,3 V; V_{g3} adjusted for optimum focus.
White-light output = 9300 K + 27 M.P.C.D.;
CIE co-ordinates x = 0,281, y = 0,311.
Raster size = 409,3 x 309,6 mm² (16,11 x 12,19 in²).

Luminance at the centre of the screen as a function of I_{total}.

$V_{a,g4}$ = 30 kV; V_f = 6,3 V; V_{g3} adjusted for optimum focus.
White-light output = 6500 K + 7 M.P.C.D.;
CIE co-ordinates x = 0,313, y = 0,329.
Raster size = 409,3 x 309,6 mm² (16,11 x 12,19 in²).

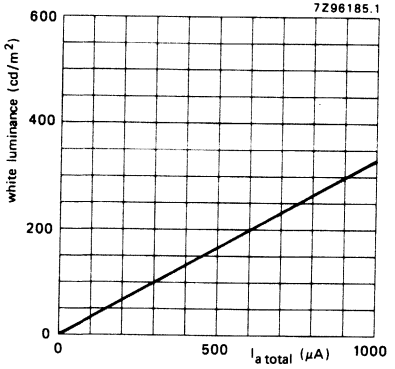

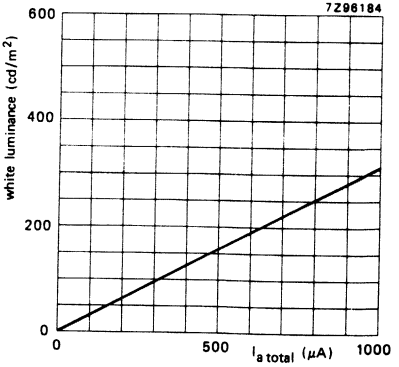

A51EBS10X

Luminance at the centre of the screen as a function of I_{total}.

$V_{a,g4}$ = 30 kV; V_f = 6,3 V; V_{g3} adjusted for optimum focus.
White-light output = 9300 K + 27 M.P.C.D.;
CIE co-ordinates x = 0,281, y = 0,311.
Raster size = 409,3 x 309,6 mm² (16,11 x 12,19 in²).

Luminance at the centre of the screen as a function of I_{total}.

$V_{a,g4}$ = 30 kV; V_f = 6,3 V; V_{g3} adjusted for optimum focus.
White-light output = 6500 K + 7 M.P.C.D.;
CIE co-ordinates x = 0,313, y = 0,329.
Raster size = 409,3 x 309,6 mm² (16,11 x 12,19 in²).

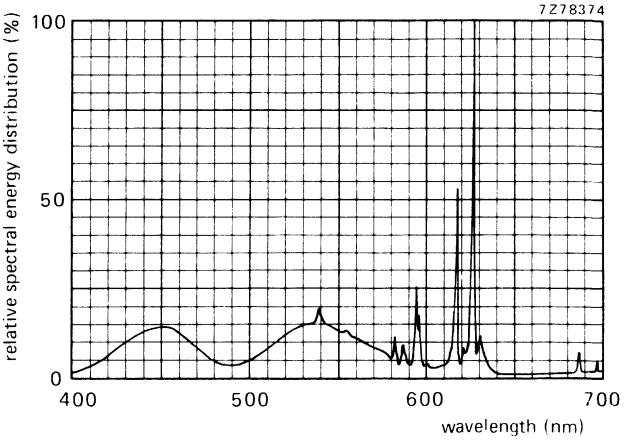

Simultaneous excitation of red, green and blue phosphor, measured in a tube, to produce white of x = 0,281, y = 0,311. Exact shape of the peaks depends on the resolution of the measuring apparatus.

Colour co-ordinates:	x	y
red	0,635	0,340
green	0,315	0,600
blue	0,150	0,060

90° FLAT SQUARE COLOUR PICTURE TUBE ASSEMBLIES

- Factory preset tube/coil assemblies
- Self-converging and raster correction free
- 51 cm, 90° colour picture tube A51EBS . . X
- Hybrid saddle toroidal deflection unit of the AT6030 series

QUICK REFERENCE DATA

Deflection angle	90°
Minimum useful screen diagonal	51 cm
Overall length	444 mm
Neck diameter	29,1 mm

AVAILABLE ASSEMBLIES

assembly type	assembly components
A51EBS00X40	tube A51EBS00X + deflection unit AT6030, type 1
A51EBS10X40	tube A51EBS10X + deflection unit AT6030, type 1

MECHANICAL DATA

Dimensions in mm

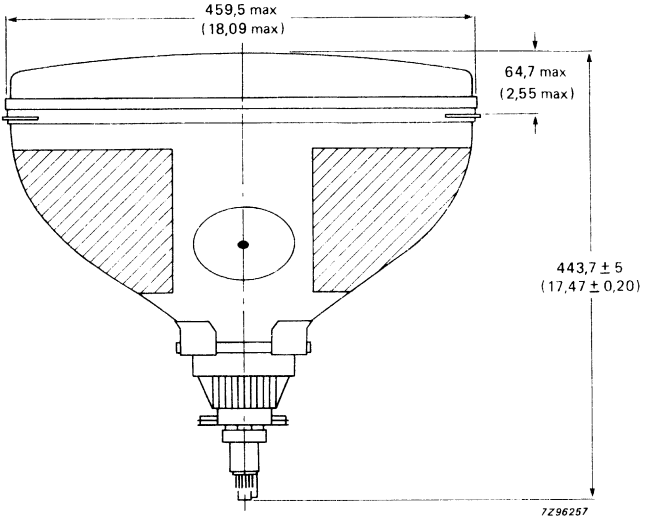

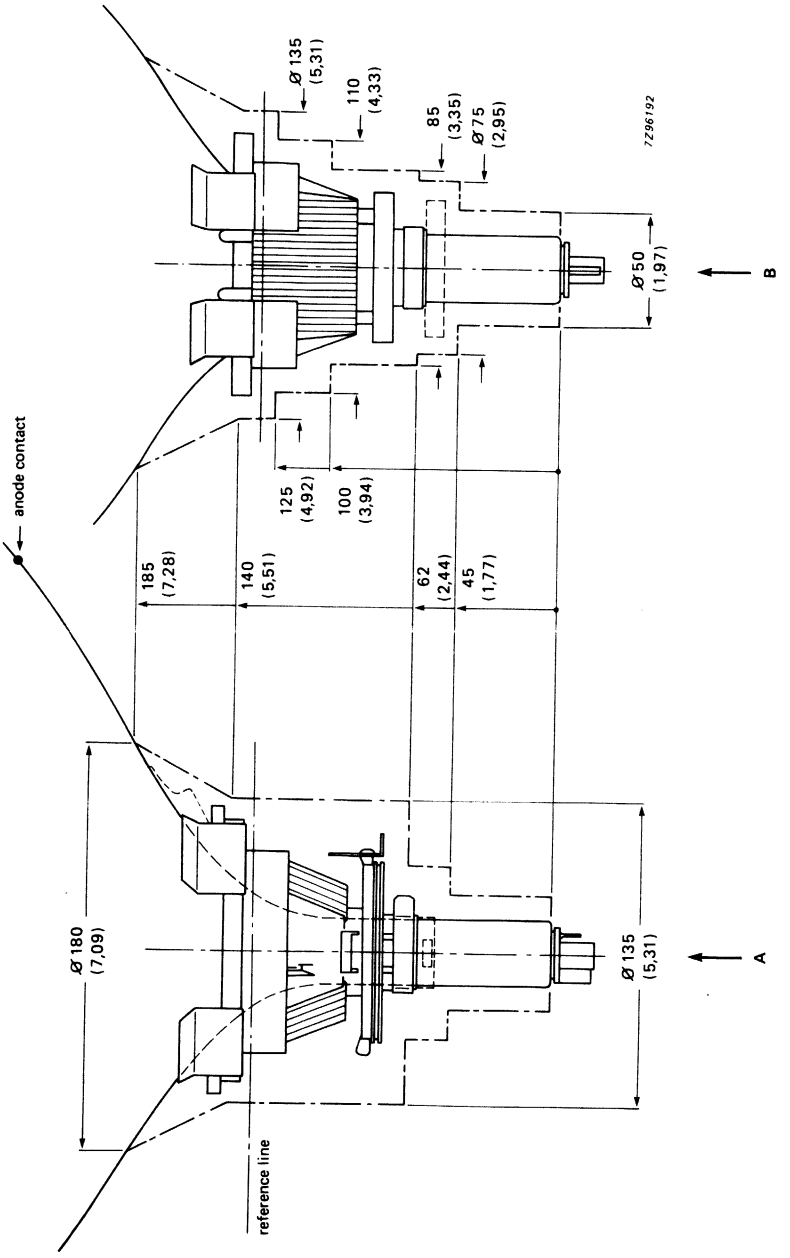

Yoke clearance.

ELECTRICAL DATA OF DEFLECTION UNIT

Line deflection coils	
inductance at 1 V (r.m.s.), 1 kHz	2,0 mH ± 4%
resistance at 25 °C	2,35 Ω ± 10%
magnetic flux	5,70 mWb ± 2,5%
Line deflection current, edge to edge, at 25 kV	2,85 A (p-p)
Field deflection coils	
inductance at 1 V (r.m.s.), 1 kHz	19,5 mH ± 10%
resistance at 25 °C	9,7 Ω ± 7%
Field deflection current, edge to edge, at 25 kV	1,09 A (p-p)
Cross-talk	a voltage of 10 V, 15625 Hz applied to the line coils causes no more than 0,2 V across the field coils (damping resistors included)
Insulation resistance at 1 kV (d.c.)	
between line and field coils	> 500 MΩ
between line coil and core clamp	> 500 MΩ
between field coil and core clamp	> 10 MΩ

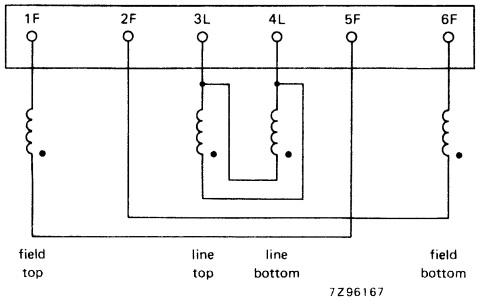

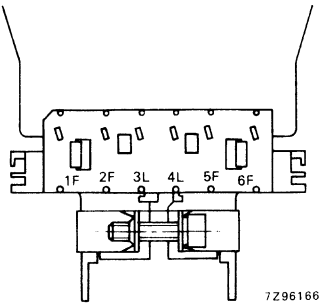

Connection diagram and top view of terminals of deflection unit AT6030, type 1. The beginning of the windings is indicated with ●.

FLAT SQUARE HIBRICON COLOUR PICTURE TUBES

- Flat and square screen
- 90° deflection
- In-line, hi-bi potential A R T* gun
- 29,1 mm neck diameter
- Mask with corner suspension
- Hibricon screen with pigmented phosphors featuring high brightness and increased contrast performance
- Quick-heating low-power cathodes
- Soft flash
- Slotted shadow mask optimized for minimum moiré at 525 lines system
- Internal magnetic shield
- Internal multipole
- Reinforced envelope for push-through mounting
- The tube is supplied with a matched hybrid saddle toroidal deflection unit of the AT6030 series; it forms a self-converging and raster correction free assembly

QUICK REFERENCE DATA

Deflection angle	90°
Minimum useful screen diagonal	51 cm
Overall length	444 mm
Neck diameter	29,1 mm
Heating	6,3 V, 310 mA
Focusing voltage	31% of anode voltage

Types A51EBS20X and A51EBS30X are identical, except for the light transmission of the face glass at centre: 64,5% for A51EBS20X, and 52,3% for A51EBS30X.

* Aberration Reducing Triode.

GENERAL DATA

1. ELECTRICAL

Electron guns		unitized triple-aperture electrodes; aberration reducing triode
Heating		
heater voltage	V_f	6,3 V
heater current	I_f	310 mA
Focusing method		electrostatic
Focus lens		hi-bi-potential
Convergence method		magnetic
Deflection method		magnetic
Deflection angles (approx.)		
diagonal		90 deg
horizontal		78 deg
vertical		60 deg
Direct interelectrode capacitances (approx.)		
grid 1 to all other electrodes	C_{g1}	17 pF
all cathodes to all other electrodes	C_k	15 pF
each cathode to all other electrodes	C_{kR}, C_{kG}, C_{kB}	5 pF
grid 3 to all other electrodes	C_{g3}	6 pF
grid 2 to all other electrodes	C_{g2}	4,5 pF
anode to external conductive coating, including rim band	$C_{a(m+m')}$	$<$ 2200 pF $>$ 1600 pF
Resistance between rimband and external conductive coating		$\geqslant$ 50 MΩ

2. OPTICAL

Screen	metal-backed vertical phosphor stripes; phosphor lines follow glass contour
Screen finish	high polish
Useful screen dimensions	
diagonal	min. 510,0 mm (20,08 in)
horizontal axis	min. 409,3 mm (16,11 in)
vertical axis	min. 309,6 mm (12,19 in)
area	min. 1253 cm^2 (194,22 in^2)
Positional accuracy of the screen with respect to the glass contour	see Figure on the next page
Phosphors	
red	pigmented europium activated rare earth
green	sulphide type
blue	pigmented sulphide type
Persistence	medium short

Colour co-ordinates	x	y
red	0,635	0,340
green	0,315	0,600
blue	0,150	0,060

A = 171,7 mm (6,76 in)
B = 223,7 mm (8,81 in)
C = 115,6 mm (4,55 in)
D = 173,9 mm (6,85 in)
E = 23,5 mm (0,93 in)

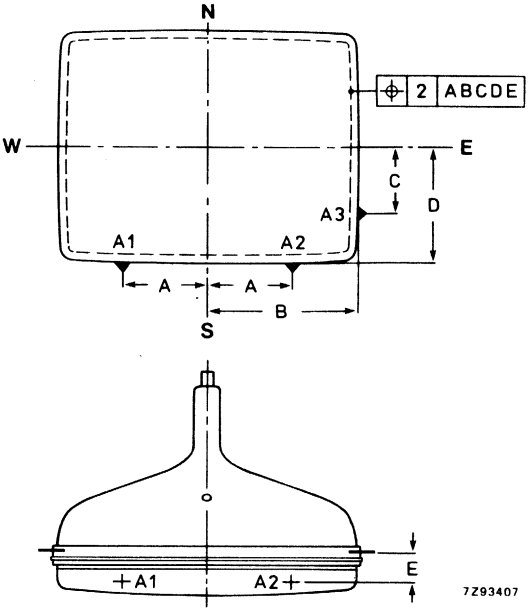

Centre-to-centre distance of vertical identical colour phosphor stripes, at screen centre	approx. 0,69 mm (0,027 in)
Light transmission of face glass at centre	
A51EBS20X	64,5%
A51EBS30X	52,3%

3. MECHANICAL (see also the figures on pages 12, 13 and 14)

Overall length	443,7 ± 5 mm (17,47 ± 0,20 in)
Neck diameter	$29{,}1\ ^{+1{,}4}_{-0{,}7}$ mm ($1{,}15\ ^{+0{,}06}_{-0{,}03}$ in) *
Bulb dimensions	
diagonal	max. 546,1 mm (21,5 in)
width	max. 455,6 mm (17,9 in)
height	max. 359,6 mm (14,16 in)
Base designation	JEDEC B10-277
Anode contact designation	recessed small cavity cap (JEDEC no. J1-21; IEC 67-III-2)
Bulb	
funnel	EIAJ-J540F1
panel	to be established
Implosion protection	reinforced envelope for push-through
Mass	15 kg (33 lbs)
Mounting position	anode contact on top

* In the region of 78,5 mm (3,09 in) from the neck end, the maximum diameter is 30 mm (1,18 in).

RATINGS AND ELECTRICAL DATA

1. LIMITING VALUES (Design maximum rating system unless otherwise stated)

Unless otherwise specified, voltage values are for each gun and values are positive with respect to grid 1.

Anode voltage	$V_{a,g4}$	max. min.	30 kV 20 kV	notes 1 and 2 note 3
Long-term average current for three guns	I_a	max.	1000 μA	note 4
Grid 3 (focusing electrode) voltage	V_{g3}	max.	11 kV	
Grid 2 voltage	V_{g2}	max.	1200 V	note 5
Cathode voltage				
positive	V_k	max.	400 V	
positive operating cut-off	V_k	max.	200 V	
negative	$-V_k$	max.	0 V	
negative peak	$-V_{kp}$	max.	2 V	
Cathode to heater voltage				
positive	V_{kf}	max.	250 V	
positive peak	V_{kfp}	max.	300 V	note 1
negative	$-V_{kf}$	max.	135 V	
negative peak	$-V_{kfp}$	max.	180 V	note 1
Heater voltage	V_f		6,3 V $^{+5\%}_{-10\%}$	notes 1 and 6

Notes

1. Absolute maximum rating system.
2. During adjustment on the production line this value is likely to be surpassed considerably. It is therefore strongly recommended to first make the necessary adjustments for normal operation without picture tube.
3. Operation of the tube at lower voltages impairs the luminance and resolution, and could impair convergence.
4. The short-term average anode current should be limited by circuitry to 1500 μA.
5. During adjustment on the production line max. 1500 V is permitted.
6. For maximum cathode life it is recommended that the heater supply be designed for 6,3 V at zero beam current.

2. EQUIPMENT DESIGN RANGES

Unless otherwise specified, values are for each gun and voltage values are positive with respect to grid 1.

For anode voltages between 20 kV and 30 kV:

Grid 3 (focusing electrode) voltage	V_{g3}	29% to 33% of anode voltage
Grid 2 voltage and cathode voltage for visual extinction of undeflected focused spot	V_{g2}, V_k	see cut-off design chart, page 19; note 1
Maximum ratio of cathode voltage highest gun to lowest gun in any tube		1,25
Video drive characteristics		see graphs on page 20; note 2
Grid 3 current	I_{g3}	-2 to $+2$ μA
Grid 2 current	I_{g2}	-2 to $+2$ μA
Grid 1 current, under cut-off condition	I_{g1}	-2 to $+2$ μA

	white D 6500K + 7 M.P.C.D			9300K + 27 M.P.C.D.		
To produce white of the following CIE co-ordinates	x 0,313			0,281		
	y 0,329			0,311		
Percentage of total anode current supplied by each gun (typical)	red	green	blue	red	green	blue
	38,3	35,8	25,9%	27,9	39,1	33,0%
Ratio of anode current	min.	typ.	max.	min.	typ.	max.
red to blue	1,1	1,5	1,9	0,6	0,9	1,2
red to green	0,8	1,1	1,4	0,5	0,7	1,0
blue to green	0,5	0,7	1,0	0,6	0,9	1,2

Notes

1. The common V_{g2} should be adjusted as follows:
   Set the cathode voltage, V_k, for each gun at 130 V. Increase the V_{g2} from about 575 V to the value at which the raster of one of the guns becomes just visible. Now decrease the V_k of the remaining guns so that the rasters of these guns also become visible.
2. For optimum picture performance it is recommended that the cathodes are not driven below +1 V.

3. EXAMPLE OF USE OF DESIGN RANGES

Unless otherwise specified, voltage values are for each gun and are positive with respect to grid 1.

Anode voltage	$V_{a,g4}$	27,5 kV	
Grid 3 (focusing electrode) voltage	V_{g3}	8,0 to 9,1 kV	
Grid 2 voltage when circuit design utilizes cathode voltage of 130 V for visual extinction of focused spot	V_{g2}	575 to 825 V	
Heater voltage, under operating conditions	V_f	6,3 V	note 1

	A51EBS20X	A51EBS30X	
Luminance at the centre of the screen L	204 cd/m² (59,64 foot lambert)	165 cd/m² (48,24 foot lambert)	note 2
	198 cd/m² (57,89 foot lambert)	160 cd/m² (46,78 foot lambert)	note 3

4. BEAM CORRECTIONS

Maximum centring error in any direction after colour purity, static convergence, and horizontal centre line correction, measured with deflection coils in nominal position: 4 mm (0,16 in)

5. LIMITING CIRCUIT VALUES

High voltage circuits

To minimize the possibility of damage to the circuit caused by a momentary internal arc, it is recommended that the high-voltage power supply and the grid 3 power supply be of the limited energy type.

Grid 3 circuit resistance	R_{g3}	max.	70 MΩ
Grid 1 to cathode circuit resistance (each gun)	R_{g1k}	max.	0,75 MΩ

Notes

1. The tube has quick-heating cathodes; if standby conditions are still required operate at 5,0 V.
2. Tube settings adjusted to produce white of 9300K + 27 M.P.C.D. (x = 0,281, y = 0,311), focused raster, current density 0,4 $\mu A/cm^2$.
3. Tube settings adjusted to produce white of 6500K + 7 M.P.C.D. (x = 0,313, y = 0,329), focused raster, current density 0,4 $\mu A/cm^2$.

6. DEGAUSSING

The picture tube has an internal magnetic shield. This shield and the shadow mask with its suspension system may be provided with an automatic degaussing system, consisting of two coils covering top and bottom cone parts, or one large coil.

For proper degaussing an initial magnetomotive force (m.m.f.) of 300 ampere-turns* is required in each of the coils. This m.m.f. has to be gradually decreased by appropriate degaussing circuitry. In the steady state, no significant m.m.f. should remain in the coils ($\leqslant$ 0,3 ampere-turns**).

If single-phase power rectification is employed in the t.v. circuitry, provision should be included to prevent asymmetric distortion of the a.c. voltage applied to the degaussing circuit due to high d.c. inrush currents.

Examples of a double-coil and of a single-coil system are given below.

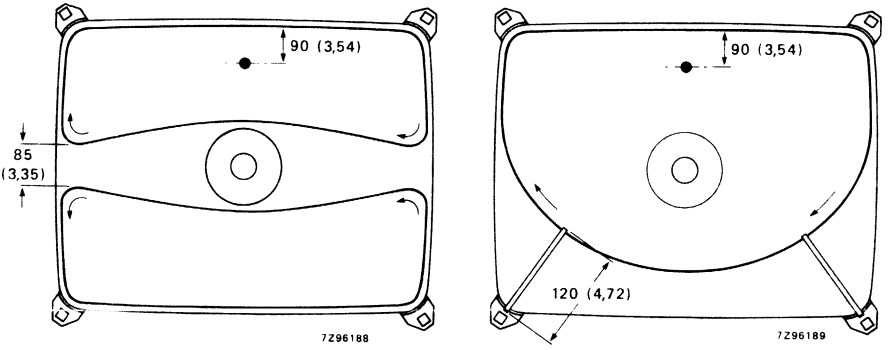

Position of degaussing coils on the picture tube.

Degaussing circuit using dual PTC thermistor 2322 662 98009; C = 100 nF, for double-coil system, optional for single-coil system.

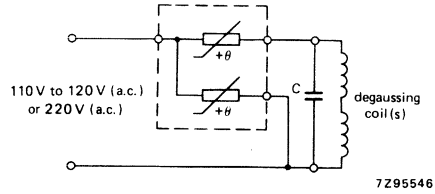

Data of degaussing coil

	double-coil system	single-coil system
Circumference	125 cm (49 in)	139 cm (54 in)
Number of turns	60	140
Copper-wire diameter	0,4 mm (0,016 in)	0,4 mm (0,016 in)
Aluminium-wire diameter	0,5 mm (0,02 in)	0,5 mm (0,02 in)
Resistance	22 Ω (two coils in series)	27 Ω

* For double-coil system; 700 ampere-turns for single-coil system.
** For double-coil system; $\leqslant$ 0,6 ampere-turns for single-coil system.

7. FLASHOVER PROTECTION

With the high voltage used with this tube (max. 30 kV) internal flashovers may occur. As a result of the Soft-Flash technology these flashover currents are limited to approx. 60 A offering higher set reliability, optimum circuit protection and component savings.

Primary protective circuitry using properly grounded spark gaps and series isolation resistors (preferably carbon composition) is still necessary to prevent tube damage. The spark gaps should be connected to all picture tube electrodes at the socket according to the figure below; they are not required on the heater pins. No other connections between the outer conductive coating and the chassis are permissible. The spark gaps should be designed for a breakdown voltage at the focusing electrode (g3) of 13,5 kV (1,5 x V_{g3} max. at $V_{a,g4}$ = 27,5 kV), and at the other electrodes of 1,5 to 2 kV.

The values of the series isolation resistors should be as high as possible (min. 1,5 kΩ) without causing deterioration of the circuit performance. The resistors should be able to withstand an instantaneous surge of 20 kV for the focusing circuit and 12 kV for the remaining circuits without arcing. Additional information is available on request.

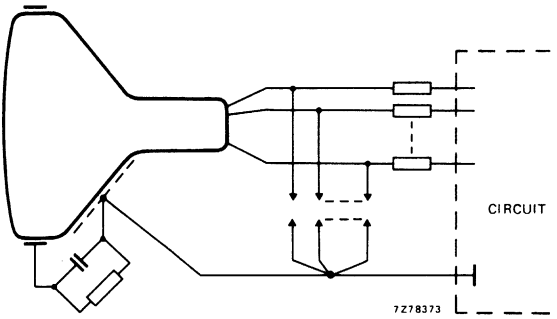

X-RADIATION LIMIT

Maximum anode voltage at which the X-radiation emitted will not exceed 0,5 mR/h at an anode current of 300 μA

entire tube	35,5 kV *
face-plate only	37 kV

Warning:

If the value for the tube face only is used as design criterion, adequate shielding must be provided in the receiver for the anode contact and/or certain portions of the tube funnel and panel skirt to insure that the X-radiation from the receiver is attenuated to a value equal to or lower than that specified for the face of the tube.

Maximum voltage difference between anode and focus electrode at which the X-radiation will not exceed 0,5 mR/h 30 kV

Warning:

If the voltage value above can be exceeded in the receiver, additional attenuation of the X-radiation through the tube neck may be required.

The X-radiation emitted from this picture tube, as measured in accordance with the procedure of JEDEC Publication No. 64D, will not exceed 0,5 mR/h throughout the useful tube life when operated within the 'Design maximum ratings'.

The tube should not be operated beyond its 'Design maximum ratings' stated above, but its X-radiation will not exceed 0,5 mR/h for anode voltage and current combinations given by the isoexposure-rate limits characteristics shown on the next page.

Operation above the values shown by the curve may result in failure of the television receiver to comply with the Federal Performance Standard of the U.S. for Television Receivers, Section 1020-10 of Part 1020 of Title 21, Code of Federal Regulation (PL90-602) as published in the Federal Register Volume 38, No. 198, Monday, October 15, 1973.

Maximum X-radiation as a function of anode voltage at 300 μA anode current is shown by the curve on the next page. X-radiation at a constant anode voltage varies linearly with anode current.

* This rating applies only if the anode connector used by the set maker provides the necessary attenuation to reduce the X-radiation from the anode contact by a factor equal to the difference between the anode button isoexposure-rate limit curve and the isoexposure-rate limit curve for the entire tube.

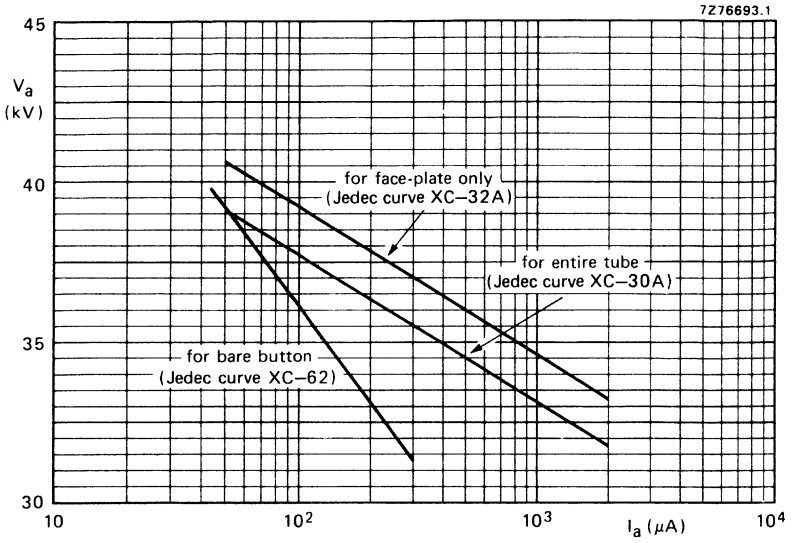

0,5 mR/h isoexposure-rate limit curve.

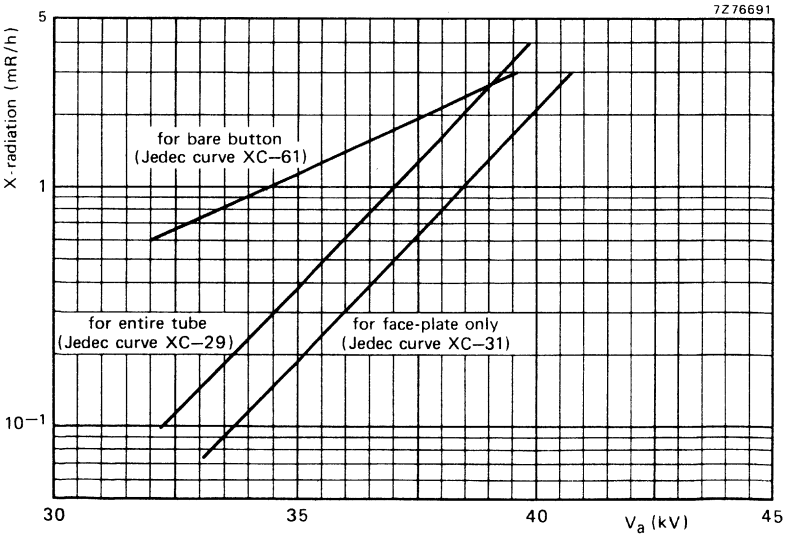

X-radiation limit curve at a constant anode current of 300 μA.

WARNINGS

X-radiation

Operation of this colour picture tube at abnormal conditions which exceed the 0,5 mR/h iso-dose rate curve shown on the preceding page may produce soft X-rays which may constitute a health hazard on prolonged exposure at close range unless adequate external screening is provided. Precautions must therefore be exercised during servicing of TV receivers employing this tube to assure that the anode voltage and other tube voltages are adjusted to the recommended values so that the 'Design maximum ratings' will not be exceeded.

Tube replacement

This picture tube employs integral X-radiation and implosion protection and must be replaced with a tube of the same type number or a recommended replacement to assure continued safety.

Shock hazard

The high voltage at which the tube is operated may be very dangerous. The design of the TV receiver should include safeguards to prevent the user from coming in contact with the high voltage. Extreme care should be taken in the servicing or adjustment of any high-voltage circuit.

Caution must be exercised during the replacement or servicing of the picture tube since a residual electrical charge may be contained on the high-voltage capacitor formed by the external and internal conductive coatings of the picture tube funnel. To remove any residual high-voltage charges from the picture tube, 'bleed-off the charge by shorting the anode contact button, located in the funnel of the picture tube, to the external conductive coating before handling the tube. Discharging the high voltage to isolated metal parts such as cabinets and control brackets may produce a shock hazard.

Tube handling

Picture tubes should be kept in the shipping box or similar protective container until just prior to installation. Wear heavy protective clothing, including gloves and safety goggles with side shields, in areas containing unpacked and unprotected tubes to prevent possible injury from flying glass in the event a tube breaks. Handle the picture tube with extreme care. Do not strike, scratch or subject the tube to more than moderate pressure. Particular care should be taken to prevent damage to the seal area.

The receiver mounting system should incorporate sufficient cushioning so that under normal conditions of shipment or handling an impact acceleration of more than 35g is never applied to the tube.

MECHANICAL DATA

The dimensions are given in mm, and in inches between brackets.

Notes are on page 15.

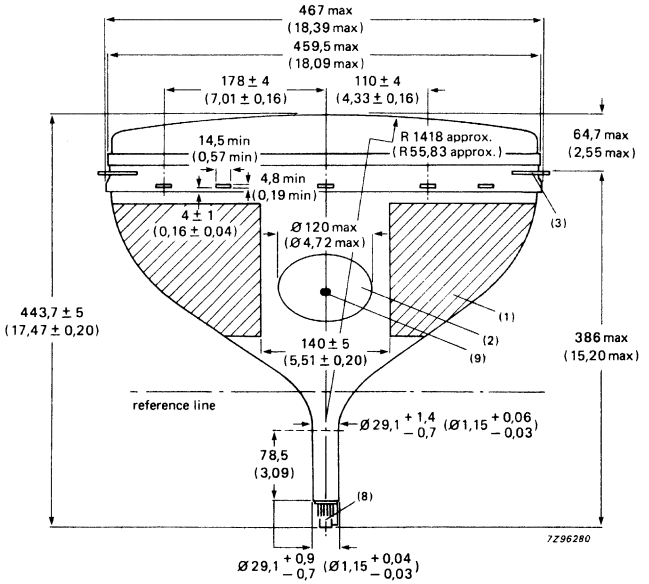

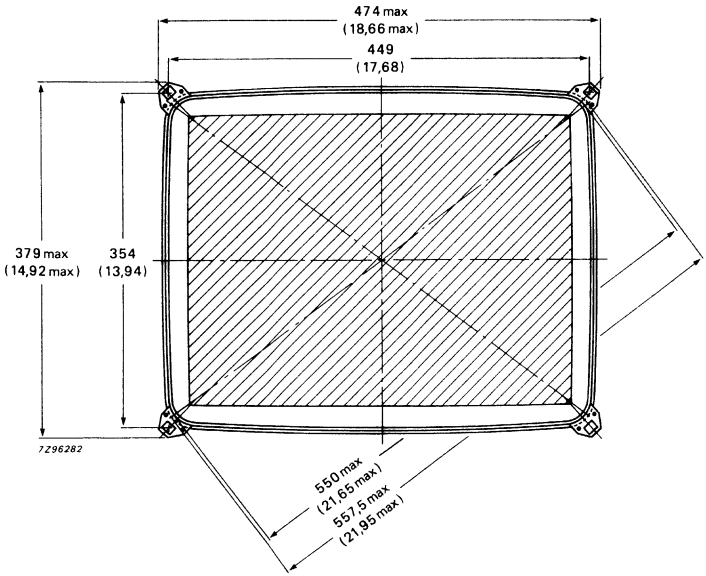

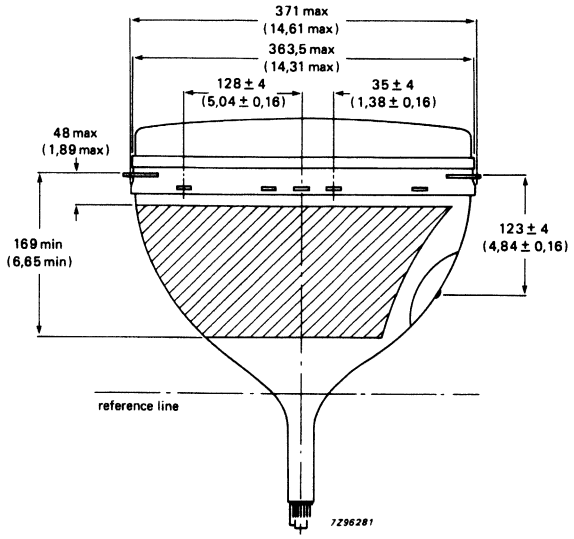
371 max
(14,61 max)
363,5 max
(14,31 max)
128 ± 4
(5,04 ± 0,16)
35 ± 4
(1,38 ± 0,16)
48 max
(1,89 max)
169 min
(6,65 min)
123 ± 4
(4,84 ± 0,16)
reference line
7Z96281

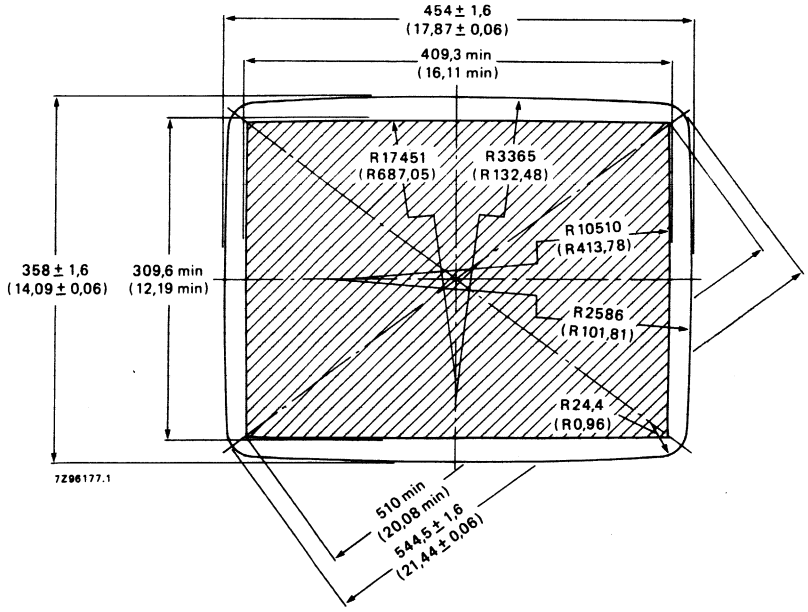
454 ± 1,6
(17,87 ± 0,06)
409,3 min
(16,11 min)
R17451
(R687,05)
R3365
(R132,48)
R10510
(R413,78)
R2586
(R101,81)
R24,4
(R0,96)
358 ± 1,6
(14,09 ± 0,06)
309,6 min
(12,19 min)
7Z96177.1
510 min
(20,08 min)
544,5 ± 1,6
(21,44 ± 0,06)

MECHANICAL DATA (continued)

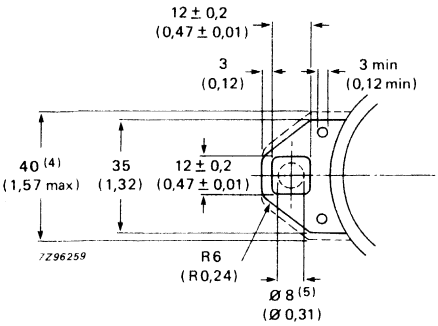

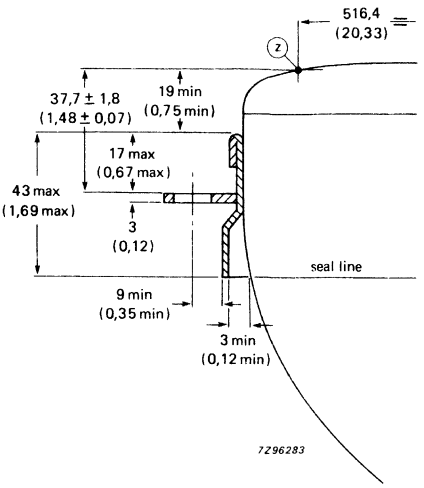

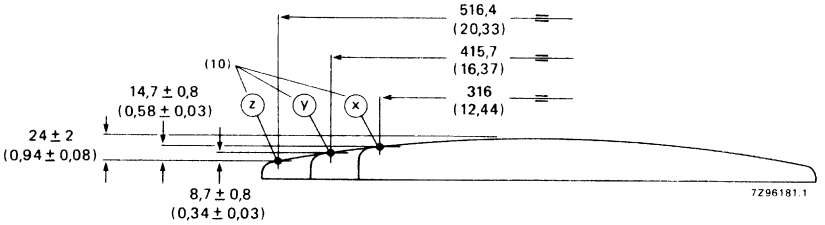

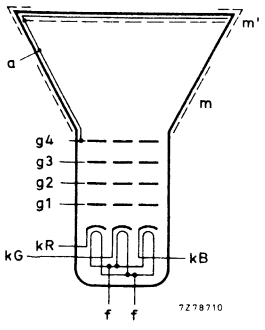

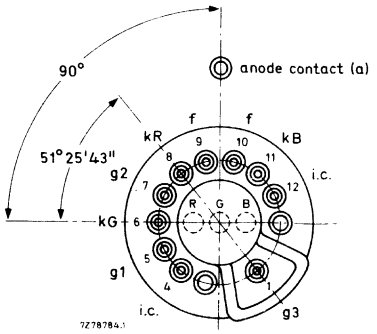

i.c. = internally connected
(not to be used)

Notes to outline drawings on the preceding pages

1. Configuration of outer conductive coating may be different but will contain the contact area as shown in the drawing.
2. To clean this area, wipe only with a soft lintless cloth.
3. The displacement of any lug with respect to the plane through the three other lugs is max. 1,3 mm (0,05 in). This deviation is incorporated in the tolerance of ± 1,8 mm (0,07 in).
4. Minimum space to be reserved for mounting lug.
5. The position of the mounting screw in the cabinet must be within a circle of 8 mm diameter drawn around the true geometrical positions, i.e. the corners of a rectangle of 354 mm (13,94 in) x 449 mm (17,68 in).
6. Not applicable.
7. Not applicable.
8. The socket for this base should not be rigidly mounted; it should have flexible leads and be allowed to move freely. After mounting of the tube in the cabinet note that the position of the base can fall within a circle, having a diameter of max. 50 mm (1,968 in), concentric with an imaginary tube axis.
9. Small cavity contact J1-21, IEC 67-III-2.
10. The X, Y and Z reference points are located on the outside surface of the face plate 3,2 mm (0,13 in) beyond the intersection of the minor, major and diagonal screen axis respectively, with the minimum published screen.

Sagittal heights with reference to screen centre at the edge of the minimum useful screen

coordinates		sagittal
x	y	height
mm	mm	mm
0	154,8	8,9
20	154,8	9,0
40	154,8	9,3
60	154,7	10,0
80	154,6	10,9
100	154,5	12,1
120	154,4	13,6
140	154,2	15,4
160	154,1	17,5
180	153,9	20,0
200	153,7	22,8
203,5	153,6	23,4
203,6	150	23,0
203,7	140	21,9
204,0	120	20,0
204,2	100	18,4
204,4	80	17,1
204,5	60	16,1
204,6	40	15,4
204,6	20	15,0
204,7	0	14,9

coordinates		sagittal
x	y	height
inch	inch	inch
0	6,09	0,35
0,79	6,09	0,35
1,57	6,09	0,37
2,36	6,09	0,39
3,15	6,09	0,43
3,94	6,08	0,48
4,72	6,08	0,54
5,51	6,07	0,61
6,30	6,07	0,69
7,09	6,06	0,79
7,87	6,05	0,90
8,01	6,05	0,92
8,02	5,91	0,91
8,02	5,51	0,86
8,03	4,72	0,79
8,04	3,94	0,72
8,05	3,15	0,67
8,05	2,36	0,63
8,06	1,57	0,61
8,06	0,79	0,59
8,06	0	0,59

Maximum cone contour

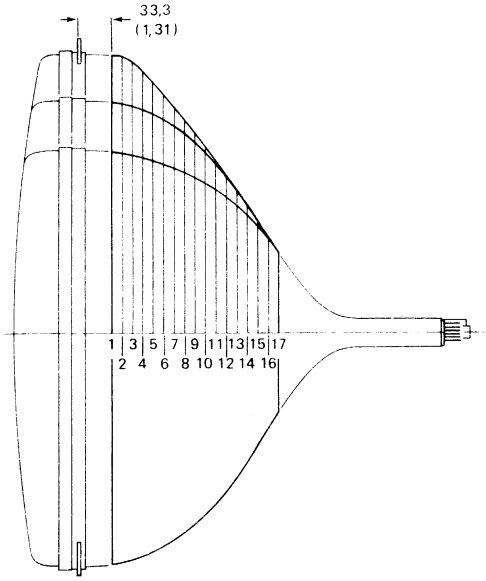

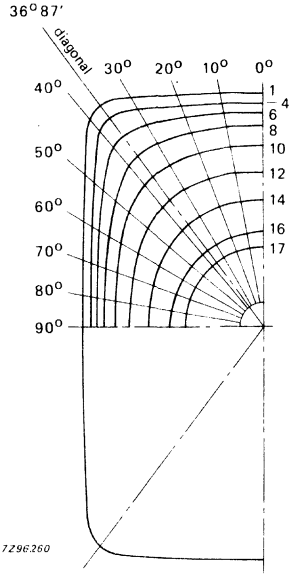

Dimensions in mm

section	nom. distance from section 1	max. distance from centre										
		0°	10°	20°	30°	diag.	40°	50°	60°	70°	80°	90°
1	0	225,7	228,9	239,1	257,6	271,8	267,2	227,9	203,1	187,9	179,6	177,0
2	10	224,6	227,7	237,7	255,9	270,0	265,3	226,7	201,9	186,8	178,6	175,9
3	20	221,8	224,8	234,3	251,1	264,3	259,6	222,9	198,9	184,2	176,1	173,5
4	30	218,1	220,9	229,6	244,5	254,7	250,6	217,9	195,1	180,9	173,1	170,6
5	40	213,8	216,4	224,1	236,5	243,1	239,6	212,0	190,9	177,3	169,9	167,5
6	50	208,7	211,0	217,7	227,5	231,3	228,4	205,6	186,3	173,6	166,5	164,2
7	60	202,6	204,5	210,0	217,5	219,5	217,0	198,5	181,0	169,3	162,6	160,5
8	70	195,1	196,8	201,3	206,9	207,6	205,4	190,3	175,1	164,4	158,3	156,3
9	80	186,2	187,6	191,4	195,6	195,4	193,5	181,3	168,4	158,9	153,3	151,5
10	90	175,6	176,9	180,1	183,3	182,8	181,1	171,4	160,7	152,5	147,6	146,0
11	100	163,6	164,6	167,4	169,9	169,2	167,9	160,4	151,9	145,2	141,0	139,6
12	110	150,3	151,3	153,8	155,7	154,7	153,6	147,9	141,7	136,6	133,4	132,3
13	120	136,4	137,3	139,3	140,4	139,5	138,6	134,5	130,3	126,8	124,6	123,9
14	130	122,1	122,8	124,4	124,9	124,0	123,3	120,7	118,2	116,1	114,7	114,3
15	140	107,5	107,7	108,2	108,6	108,4	108,2	107,0	105,7	104,5	103,8	103,5
16	150	92,6	92,3	92,3	92,6	92,8	92,9	92,9	92,6	92,1	91,6	91,4
17	159,5	78,1	78,1	78,1	78,1	78,1	78,1	78,1	78,1	78,1	78,1	78,1

Dimensions in inches

section	nom. distance from section 1	max. distance from centre										
		0°	10°	20°	30°	diag.	40°	50°	60°	70°	80°	90°
1	0	8,89	9,01	9,41	10,14	10,70	10,52	8,97	8,00	7,40	7,07	6,97
2	0,39	8,84	8,96	9,36	10,07	10,63	10,44	8,93	7,95	7,35	7,03	6,93
3	0,79	8,73	8,85	9,22	9,89	10,41	10,22	8,78	7,83	7,25	6,93	6,83
4	1,18	8,59	8,70	9,04	9,63	10,03	9,87	8,58	7,68	7,12	6,81	6,72
5	1,57	8,42	8,52	8,82	9,31	9,57	9,43	8,35	7,52	6,98	6,69	6,59
6	1,97	8,22	8,31	8,57	8,96	9,11	8,99	8,09	7,33	6,83	6,56	6,46
7	2,36	7,98	8,05	8,27	8,56	8,64	8,54	7,81	7,13	6,67	6,40	6,32
8	2,76	7,68	7,75	7,93	8,15	8,17	8,09	7,49	6,89	6,47	6,23	6,15
9	3,15	7,33	7,39	7,54	7,70	7,69	7,62	7,14	6,63	6,26	6,04	5,96
10	3,54	6,91	6,96	7,09	7,22	7,20	7,13	6,75	6,33	6,00	5,81	5,75
11	3,94	6,44	6,48	6,59	6,69	6,66	6,61	6,31	5,98	5,72	5,55	5,50
12	4,33	5,92	5,96	6,06	6,13	6,09	6,05	5,82	5,58	5,38	5,25	5,21
13	4,72	5,37	5,41	5,48	5,53	5,49	5,46	5,30	5,13	4,99	4,91	4,88
14	5,12	4,81	4,83	4,90	4,92	4,88	4,85	4,75	4,65	4,57	4,52	4,50
15	5,51	4,23	4,24	4,26	4,28	4,27	4,26	4,21	4,16	4,11	4,09	4,07
16	5,91	3,65	3,63	3,63	3,65	3,65	3,66	3,66	3,65	3,63	3,61	3,60
17	6,28	3,07	3,07	3,07	3,07	3,07	3,07	3,07	3,07	3,07	3,07	3,07

Cavity cap JEDEC J1-21, IEC 67-III-2

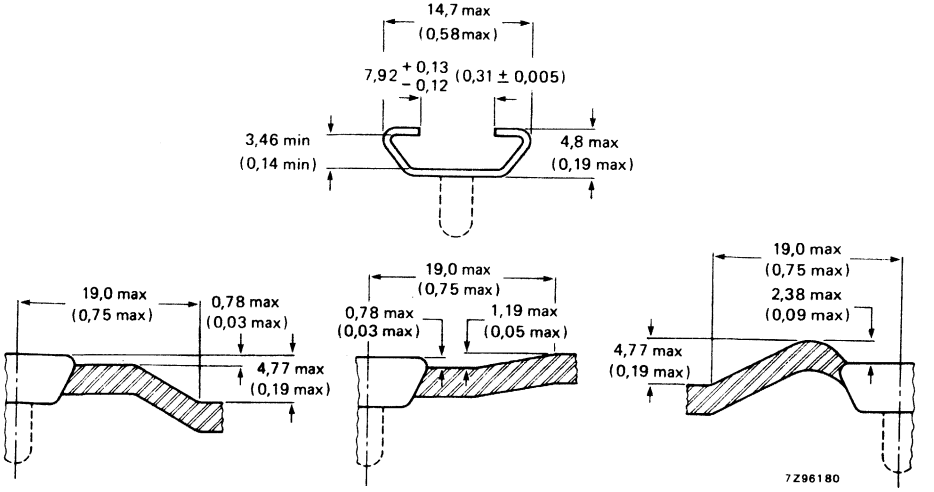

REFERENCE LINE GAUGE GR90CJ4

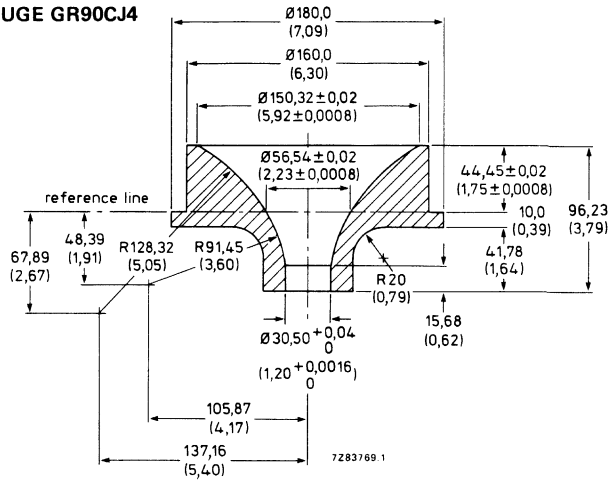

10-PIN BASE JEDEC B10-277

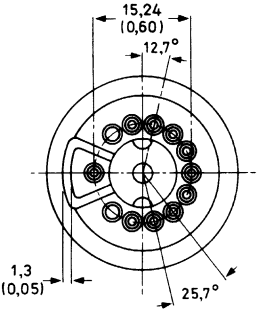

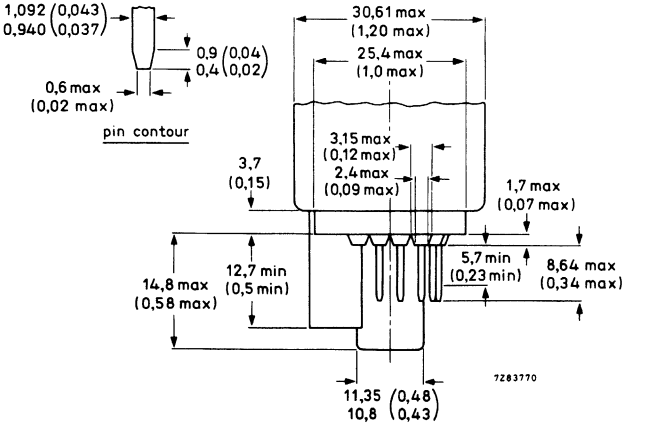

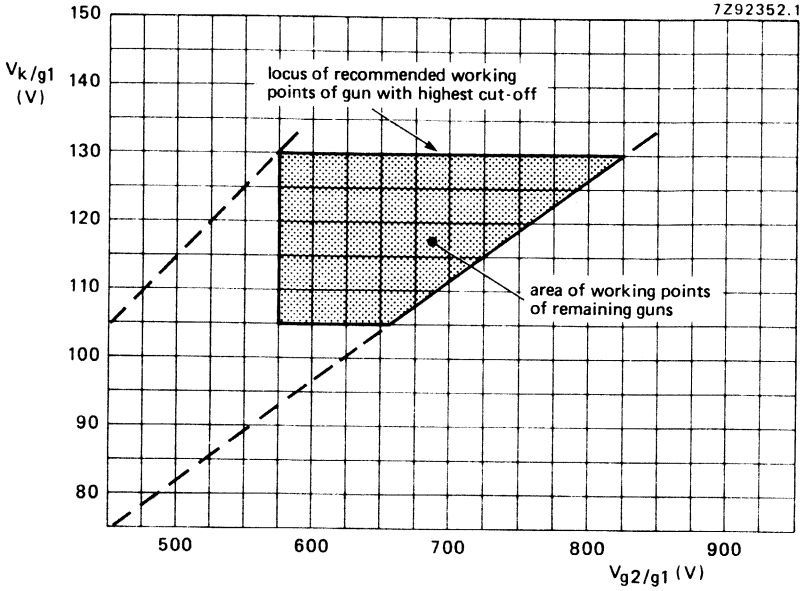

Spot cut-off design chart.

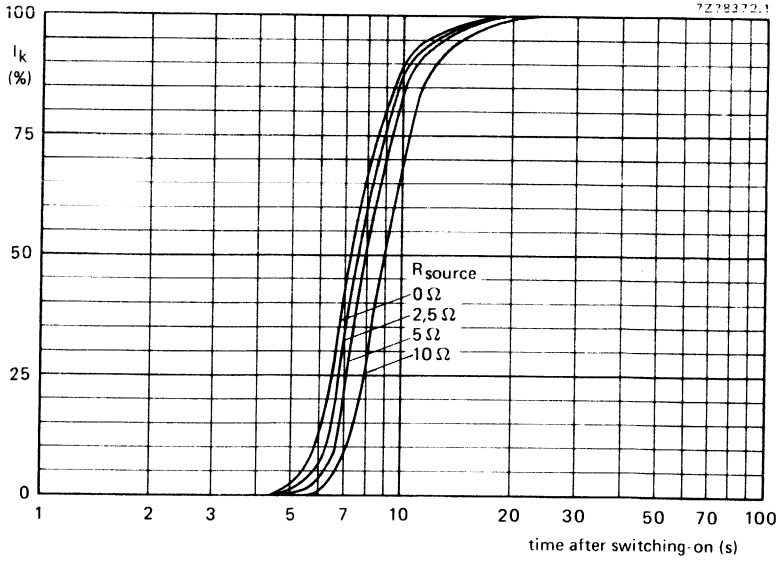

Cathode heating time to attain a certain percentage of the cathode current at equilibrium conditions.

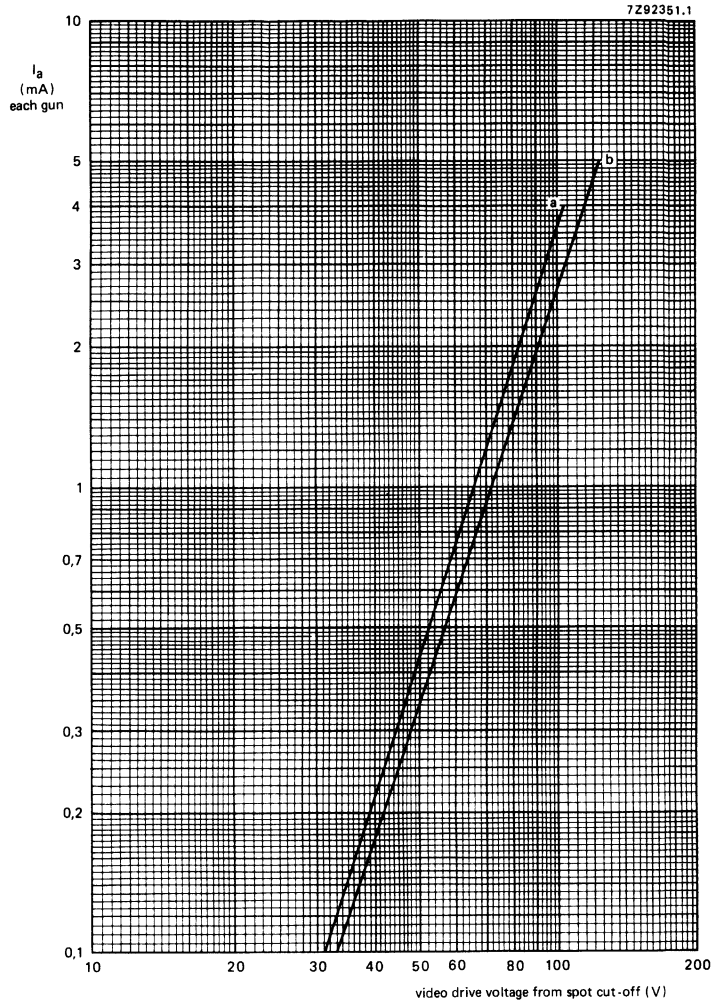

Typical cathode drive characteristic.

V_f = 6,3 V;

$V_{a,g4}$ = 30 kV;

V_{g3} adjusted for focus;

V_{g2} (each gun) adjusted to provide spot cut-off for V_k = 105 V (curve a) and V_k = 130 V (curve b).

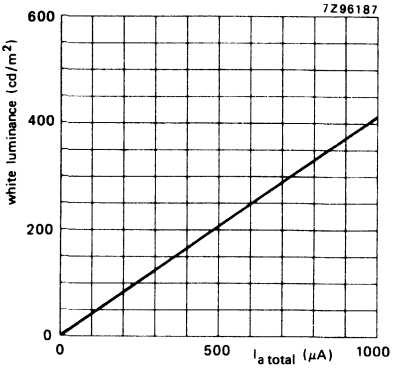

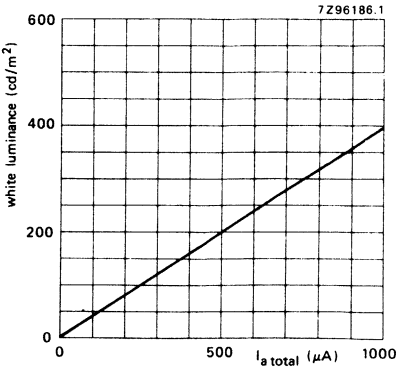

A51EBS20X

Luminance at the centre of the screen as a function of I_{total}.

$V_{a,g4}$ = 30 kV; V_f = 6,3 V; V_{g3} adjusted for optimum focus.
White-light output = 9300 K + 27 M.P.C.D.;
CIE co-ordinates x = 0,281, y = 0,311.
Raster size = 409,3 x 309,6 mm² (16,11 x 12,19 in²).

Luminance at the centre of the screen as a function of I_{total}.

$V_{a,g4}$ = 30 kV; V_f = 6,3 V; V_{g3} adjusted for optimum focus.
White-light output = 6500 K + 7 M.P.C.D.;
CIE co-ordinates x = 0,313, y = 0,329.
Raster size = 409,3 x 309,6 mm² (16,11 x 12,19 in²).

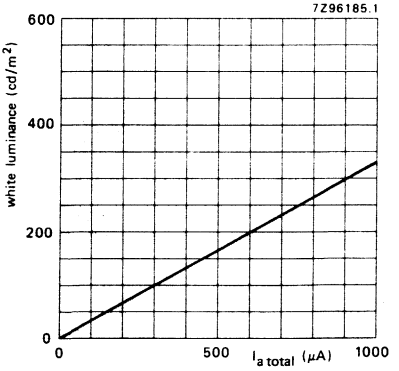

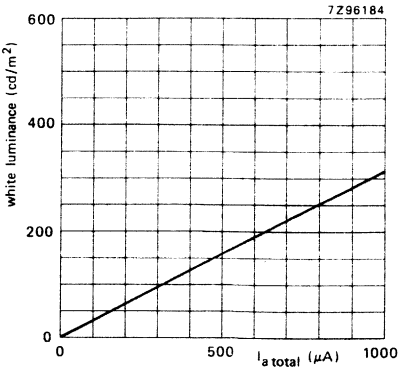

A51EBS30X

Luminance at the centre of the screen as a function of I_{total}.

$V_{a,g4}$ = 30 kV; V_f = 6,3 V; V_{g3} adjusted for optimum focus.
White-light output = 9300 K + 27 M.P.C.D.;
CIE co-ordinates x = 0,281, y = 0,311.
Raster size = 409,3 x 309,6 mm² (16,11 x 12,19 in²).

Luminance at the centre of the screen as a function of I_{total}.

$V_{a,g4}$ = 30 kV; V_f = 6,3 V; V_{g3} adjusted for optimum focus.
White-light output = 6500 K + 7 M.P.C.D.,
CIE co-ordinates x = 0,313, y = 0,329.
Raster size = 409,3 x 309,6 mm² (16,11 x 12,19 in²).

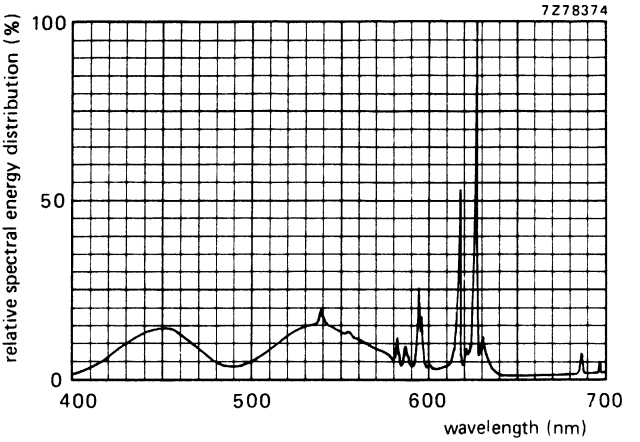

Simultaneous excitation of red, green and blue phosphor, measured in a tube, to produce white of x = 0,281, y = 0,311. Exact shape of the peaks depends on the resolution of the measuring apparatus.

Colour co-ordinates:	x	y
red	0,635	0,340
green	0,315	0,600
blue	0,150	0,060

90° FLAT SQUARE COLOUR PICTURE TUBE ASSEMBLIES

- Factory preset tube/coil assemblies
- Self-converging and raster correction free
- 51 cm, 90° colour picture tube A51EBS . . X
- Hybrid saddle toroidal deflection unit of the AT6030 series

QUICK REFERENCE DATA

Deflection angle	90°
Minimum useful screen diagonal	51 cm
Overall length	444 mm
Neck diameter	29,1 mm

AVAILABLE ASSEMBLIES

assembly type	assembly components
A51EBS20X40	tube A51EBS20X + deflection unit AT6030, type 1
A51EBS30X40	tube A51EBS30X + deflection unit AT6030, type 1

MECHANICAL DATA

Dimensions in mm

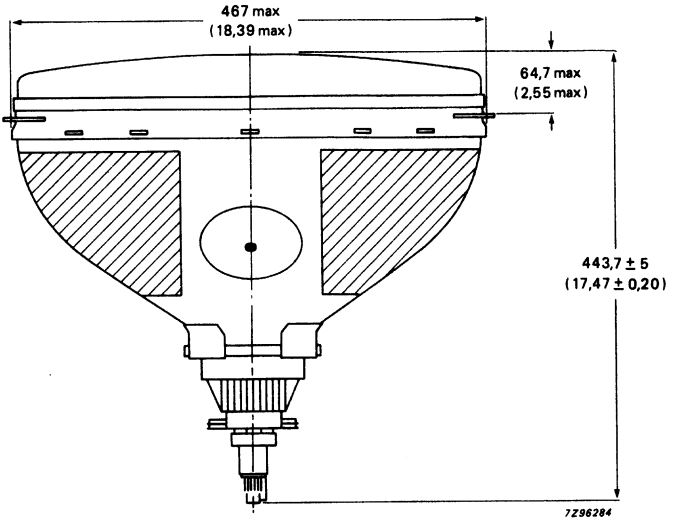

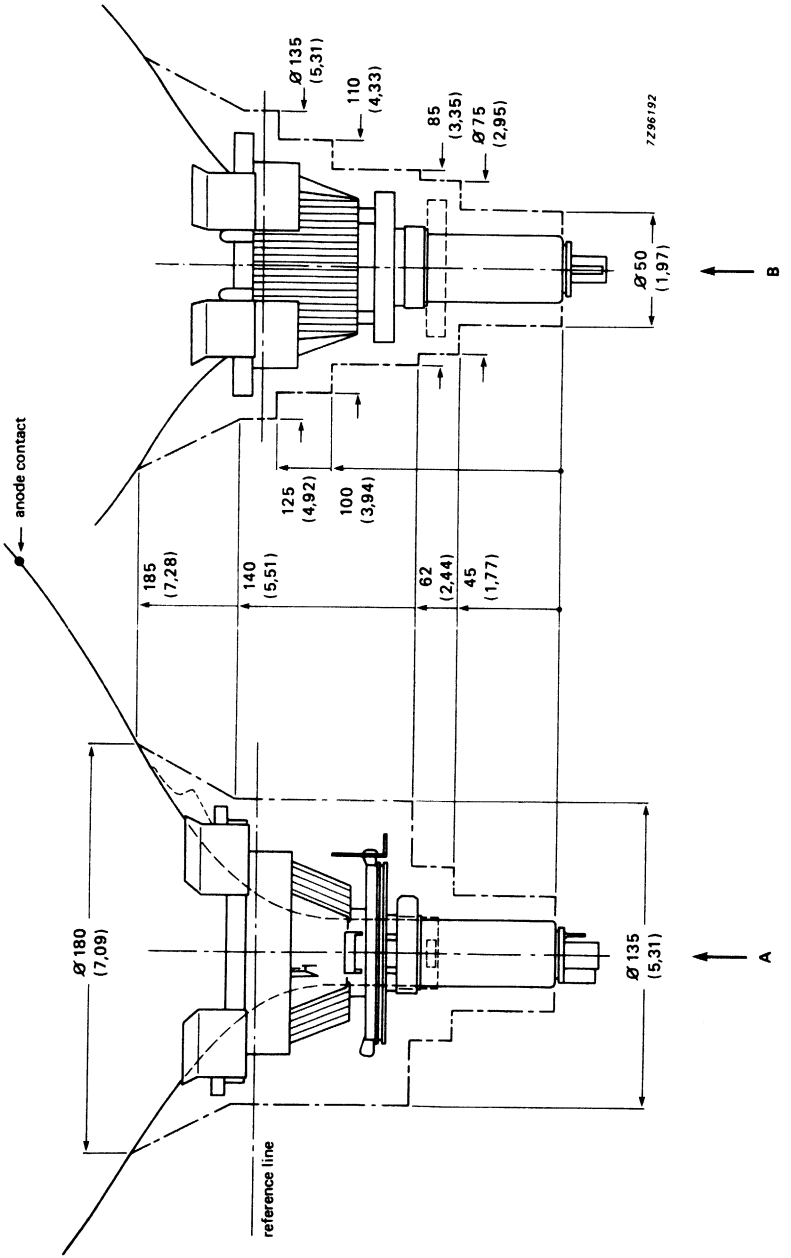

Yoke clearance.

ELECTRICAL DATA OF DEFLECTION UNIT

Line deflection coils	
inductance at 1 V (r.m.s.), 1 kHz	2,0 mH ± 4%
resistance at 25 °C	2,35 Ω ± 10%
magnetic flux	5,70 mWb ± 2,5%
Line deflection current, edge to edge, at 25 kV	2,85 A (p-p)
Field deflection coils	
inductance at 1 V (r.m.s.), 1 kHz	19,5 mH ± 10%
resistance at 25 °C	9,7 Ω ± 7%
Field deflection current, edge to edge, at 25 kV	1,09 A (p-p)
Cross-talk	a voltage of 10 V, 15625 Hz applied to the line coils causes no more than 0,2 V across the field coils (damping resistors included)
Insulation resistance at 1 kV (d.c.)	
between line and field coils	> 500 MΩ
between line coil and core clamp	> 500 MΩ
between field coil and core clamp	> 10 MΩ

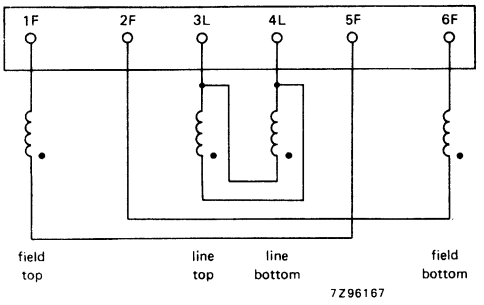

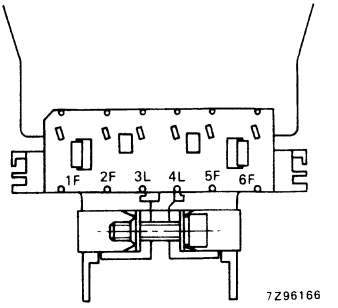

Connection diagram and top view of terminals of deflection unit AT6030, type 1. The beginning of the windings is indicated with ●.

COLOUR PICTURE TUBE

QUICK REFERENCE DATA

Temperature compensated shadow-mask designed for minimum moiré	
High white luminance at unity current ratio	
Face diagonal	56 cm
Deflection angle	110°
Neck diameter	36,5 mm
Envelope	reinforced; suitable for push-through
Magnetic shield	internal
Focusing	bi-potential
Deflection	magnetic
Convergence	magnetic
Heating	6,3 V, 730 mA
Light transmission of face glass	54,5 %
Quick heating cathode	with a typical tube a legible picture will appear within approx. 5 s

MECHANICAL DATA

Overall length	387,3 to 400,3 mm
Neck diameter	36,5 mm
Diagonal } of bulb	max. 566,2 mm
Horizontal axis } of bulb	max. 486,3 mm
Vertical axis } of bulb	max. 381,8 mm
Useful screen	
diagonal	min. 533 mm
horizontal axis	min. 447 mm
vertical axis	min. 337 mm
Base	12 pin base IEC 67-I-47a, type 2
Anode contact	Small cavity contact J1-21, IEC 67-III-2

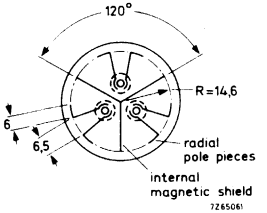

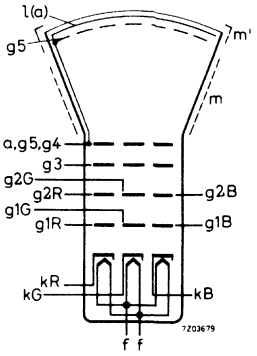

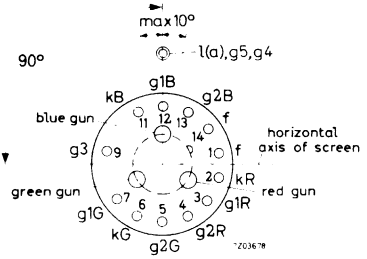

TYPICAL OPERATING CONDITIONS

Final accelerator voltage	$V_{a,g5,g4}$	25 kV
Grid 3 (focusing electrode) voltage	V_{g3}	4,2 to 5 kV
Grid 2 voltage for a spot cut-off at $V_{g1} = -105$ V	V_{g2}	212 to 495 V
Grid 1 voltage for spot cut-off at $V_{g2} = 300$ V	V_{g1}	−70 to −140 V

20AX COLOUR PICTURE TUBE

Replacement type A56-510X.

Replaces A56-500X

20AX Hi-Bri COLOUR PICTURE TUBE

QUICK REFERENCE DATA

Deflection angle	110°
Face diagonal	56 cm
Overall length	37 cm
Neck diameter	36,5 mm
Envelope	reinforced; suitable for push-through
Magnetic shield	internal
Focusing	bi-potential
Deflection	magnetic
Heating	6,3 V, 720 mA
Light transmission of face glass	68%
Quick heating cathode	with a typical tube a legible picture will appear within approx. 5 s

Inherently self-converging system with deflection unit AT1083/01

MECHANICAL DATA

Overall length	373,8 ± 6,5 mm
Neck diameter	$36{,}5\ ^{+1{,}6}_{-0}$ mm
Bulb dimensions	
diagonal	max. 566,2 mm
width	max. 486,3 mm
height	max. 381,8 mm
Useful screen dimensions	
diagonal	min. 530,6 mm
horizontal axis	min. 444,2 mm
vertical axis	min. 334,2 mm
Base	12-pin base IEC 67-I-47a, type 2
Anode contact	small cavity contact J1-21, IEC 67-III-2

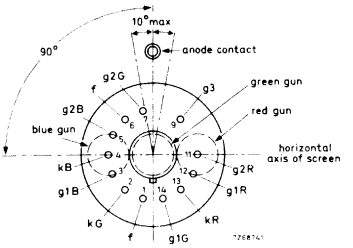

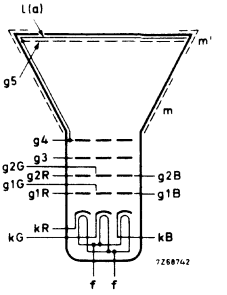

TYPICAL OPERATING CONDITIONS

The voltages are specified with respect to grid 1.

Final accelerator voltage	$V_{a,g5,g4}$	25 kV
Grid 3 (focusing electrode) voltage	V_{g3}	4,0 to 4,8 kV
Grid 2 voltage for a spot-cut-off voltage V_k = 140 V	V_{g2}	465 to 705 V
Cathode voltage for spot cut-off at V_{g2} = 555 V	V_k	110 to 165 V

30AX COLOUR PICTURE TUBE

- Automatic snap-in raster orientation
- Push-on axial purity positioning
- Internal magneto-static beam alignment
- Hi-Bi gun with quadrupole cathode lens
- Self-aligning, self-converging assembly with low power consumption, when combined with deflection unit AT 1860
- North-south pin-cushion distortion-free
- 110° deflection
- Hi-Bri screen
- Pigmented phosphors: enhanced contrast
- Phosphor lines follow glass contour
- In-line gun
- Standard 36,5 mm neck
- Soft-Flash technology
- Slotted shadow mask optimized for minimum moiré
- Fine pitch over entire screen
- Quick-heating cathodes
- Internal magnetic shield
- Anti-crackle coating
- Reinforced envelope for push-through mounting

QUICK REFERENCE DATA

Deflection angle	110°
Face diagonal	56 cm
Overall length	38 cm
Neck diameter	36,5 mm
Heating	6,3 V, 720 mA
Focusing voltage	28% of anode voltage

ELECTRON-OPTICAL DATA

Electron gun system	in line with separate grids
Focusing method	electrostatic
Focus lens	hi-bi potential
Deflection method	magnetic
Deflection angles	
diagonal	110°
horizontal	97°
vertical	77°

ELECTRICAL DATA

Capacitances				
anode to external conductive coating	C_a, g5, g4/m	max.	1800	pF
		min.	1300	pF
anode to metal rimband	C_a, g5, g4/m'		250	pF
grid of any gun to all other electrodes	$C_{g\,1R}$, $C_{g\,1G}$, $C_{g\,1B}$		7	pF
cathodes of all guns (connected in parallel) to all other electrodes	C_k		12	pF
cathode of any gun to all other electrodes	C_{kR}, C_{kG}, C_{kB}		4	pF
grid 3 (focusing electrode) to all other electrodes	C_{g3}		7	pF
Resistance between rimband and external conductive coating		min.	50	MΩ
Heating: indirect by a.c. (preferably mains or line frequency) or d.c.				
heater voltage	V_f		6,3	V
heater current	I_f		720	mA

OPTICAL DATA

Screen	metal-backed vertical phosphor stripes; phosphor lines follow glass contour
Screen finish	satinized
Useful screen dimensions	
diagonal	min. 530,6 mm
horizontal axis	min. 444,2 mm
vertical axis	min. 334,2 mm
→ area	min. 1458 cm^2
Positional accuracy of the screen with respect to the glass contour	see Figure on the next page
Phosphors	
red	pigmented europium activated rare earth
green	sulphide type
blue	pigmented sulphide type

A = 180,3 mm
B = 237,0 mm
C = 123,0 mm
D = 179,6 mm
E = 30,8 mm

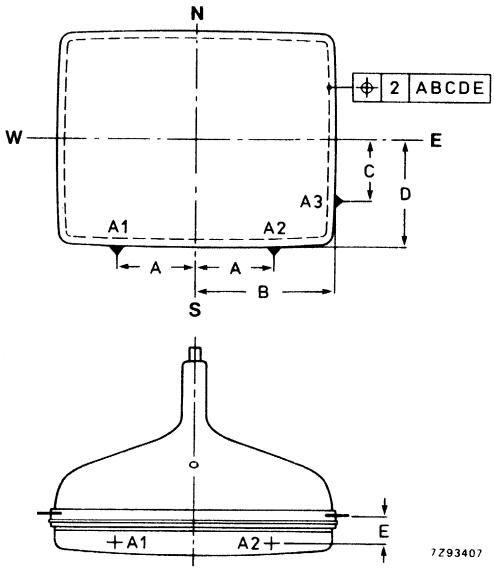

		x	y
Colour co-ordinates			
red		0,635	0,340
green		0,315	0,600
blue		0,150	0,060
Centre-to-centre distance of identical colour phosphor stripes		approx. 0,8 mm	
Light transmission of face glass		64%	
Luminance at the centre of the screen	L	160 cd/m^2 *	

MECHANICAL DATA (see also the figures on the following pages)

Overall length	383,8 ± 6 mm
Neck diameter	$36{,}5\ ^{+\ 1{,}3}_{-\ 0}$ mm
Base	12-pin base IEC 67-I-47a, type 2
Anode contact	cavity cap JEDEC J1-21, IEC 67-III-2
Mounting position	anode contact on top
Rimband	provided with 18 slots to accommodate clips for mounting of degaussing coils
Net mass	approx. 14,5 kg

Handling

During shipment and handling the tube should not be subjected to accelerations greater than 350 m/s^2 in any direction.

* Tube settings adjusted to produce white D (x = 0,313, y = 0,329), focused raster, current density 0,4 μA/cm^2.

MECHANICAL DATA (continued)

Dimensions in mm

Notes are given after the drawings.

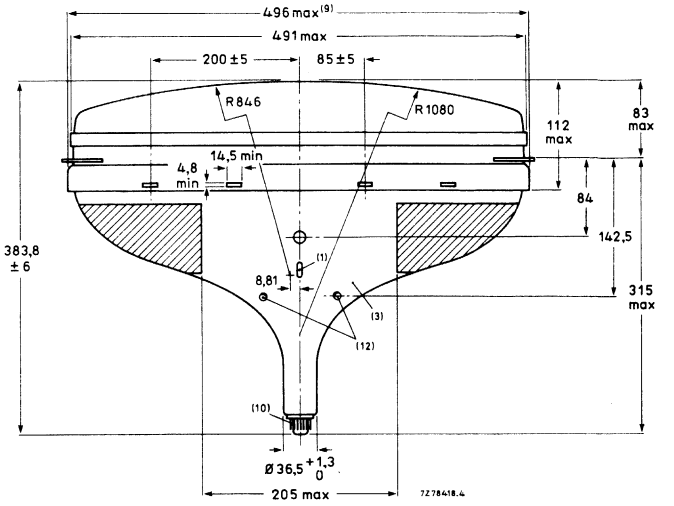

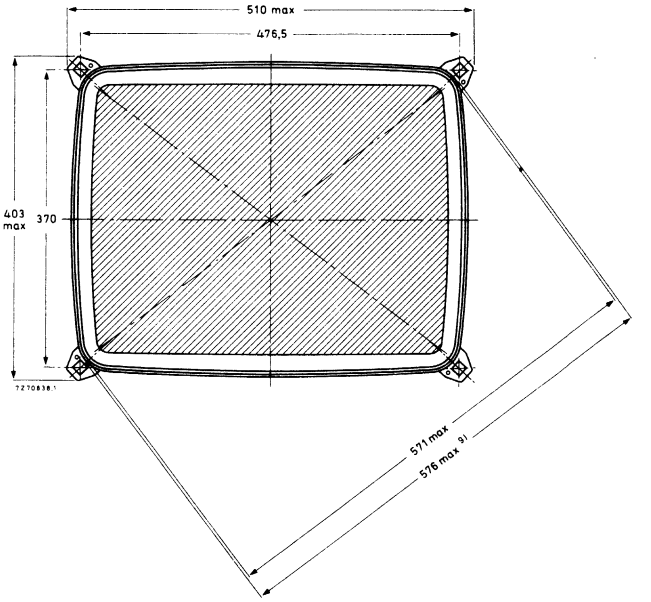

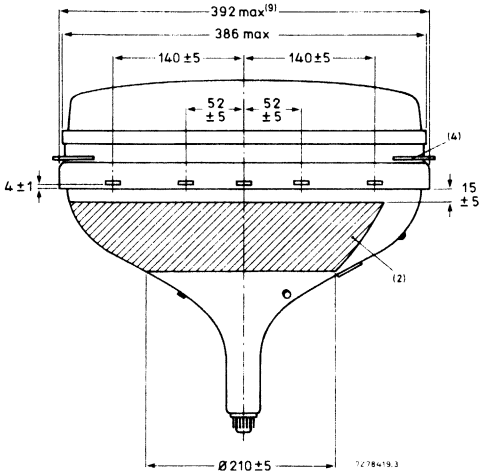

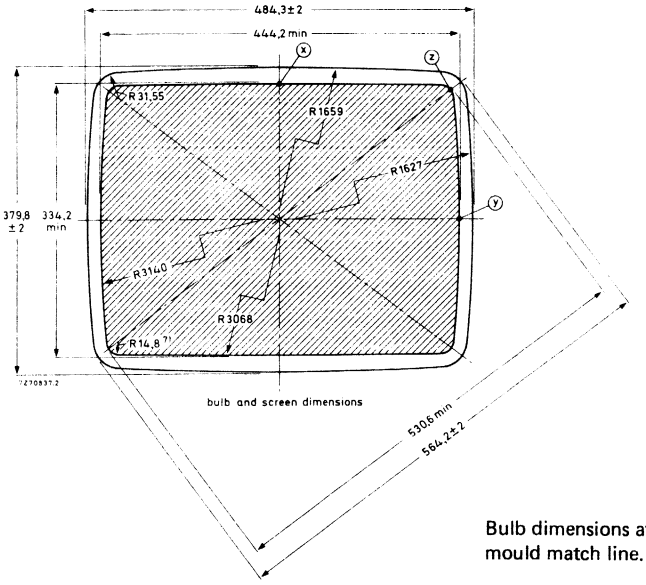

Bulb dimensions at mould match line.

MECHANICAL DATA (continued)

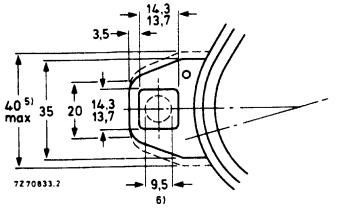

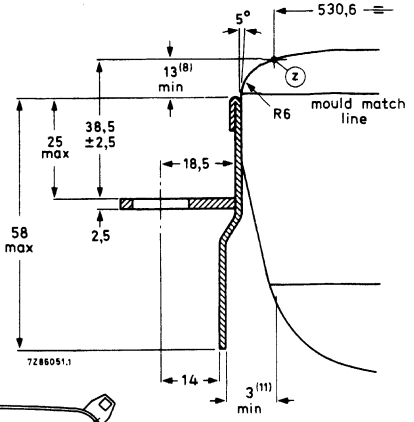

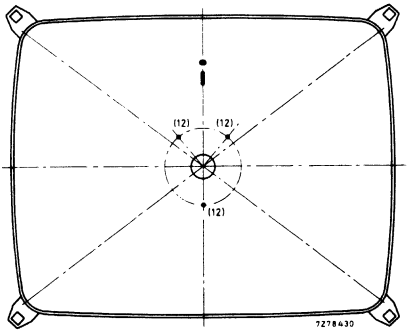

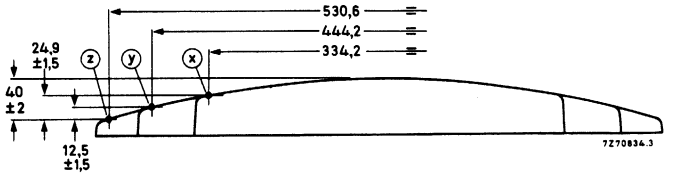

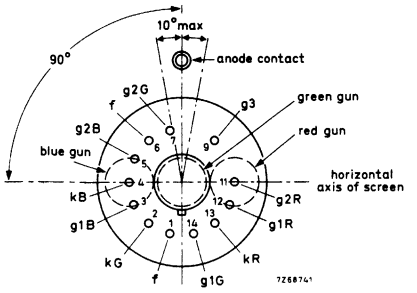

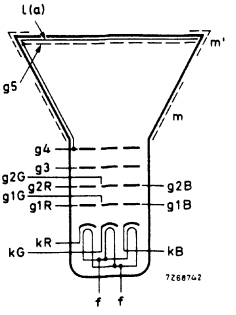

Notes to outline drawings on the preceding pages

1. This ridge can be used as an orientation for the deflection unit.
2. Configuration of outer conductive coating may be different, but will contain the contact area as shown in the drawing.
3. To clean this area wipe only with a soft lintless cloth.
4. The displacement of any lug with respect to the plane through the three other lugs is max. 2 mm.
5. Minimum space to be reserved for mounting lug.
6. The position of the mounting screw in the cabinet must be within a circle of 9,5 mm diameter drawn around the true geometrical positions, i.e. the corners of a rectangle of 476,5 mm x 370 mm.
7. Co-ordinates for radius R = 14,8 mm: x = 203,9 mm, y = 145,5 mm.
8. Distance from point z to any hardware.
9. Maximum dimensions in plane of lugs.
10. The socket for this base should not be rigidly mounted; it should have flexible leads and be allowed to move freely. Bottom circumference of the base will fall within a circle concentric with the tube axis and having a diameter of 55 mm.
    The mass of the mating socket with circuitry should not be more than 150 g; maximum permissible torque is 40 mNm.
11. Minimum distance between glass and rimband in plane of centre line of the apertures.
12. Centring bosses for deflection unit.

Sagittal heights with reference to screen centre at the edge of the minimum useful screen

coordinates		sagittal
x	y	height
mm	mm	mm
0*	166,9	16,1
20	166,9	16,3
40	166,7	16,9
60	166,3	18,0
80	165,9	19,4
100	165,3	21,3
120	164,5	23,6
140	163,7	26,4
160	162,7	29,6
180	161,6	33,3
200	160,3	37,5
215,9**	153,8	40,2
216,0	140	37,7
217,6	120	35,0
219,9	100	32,8
220,0	80	31,0
220,8	60	29,6
221,4	40	28,6
221,8	20	28,0
221,9▲	0	27,0

* Point (x).
** Diagonal.
▲ Point (y).

12-pin base, IEC 67-I-47a, type 2

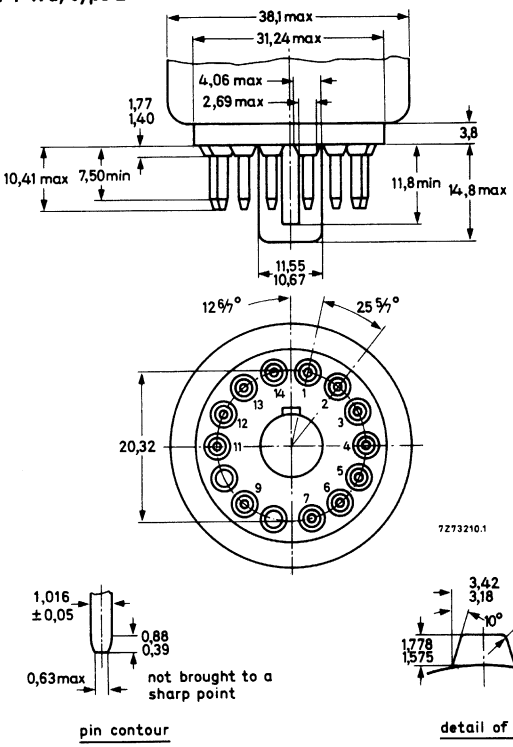

Cavity cap JEDEC J1-21, IEC 67-III-2

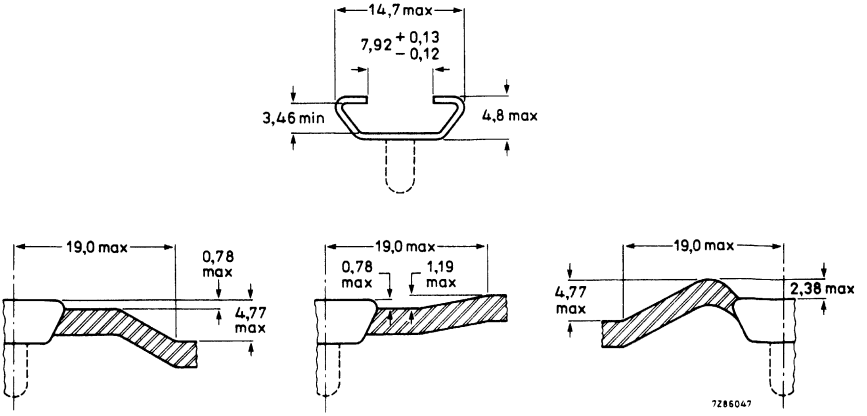

Maximum cone contour

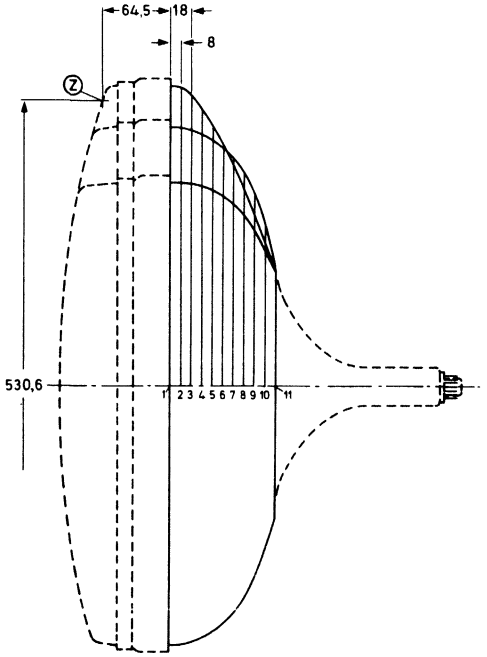

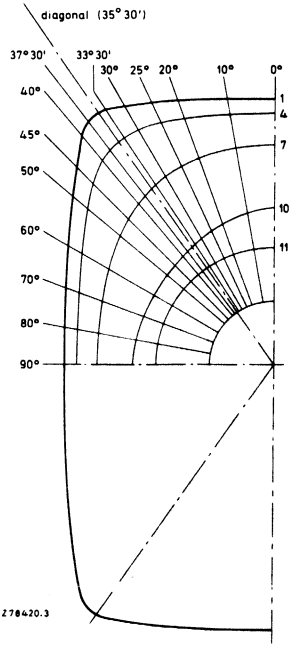

section	distance from centre (max. values)															
	nom. distance from section 1	0°	10°	20°	25°	30°	33° 30'	diag.	37° 30'	40°	45°	50°	60°	70°	80°	90°
1		248,0	251,2	261,3	269,3	279,5	286,8	288,0	286,8	281,7	262,3	245,9	222,0	207,0	198,7	196,0
2	8	244,4	247,6	257,6	265,4	275,3	282,3	283,3	282,0	276,8	257,8	241,6	218,0	203,2	195,0	192,4
3	18	240,5	243,6	252,9	259,6	267,0	271,2	271,3	269,7	265,3	250,6	236,6	214,2	199,6	191,4	188,8
4	28	235,0	237,8	245,5	250,2	254,4	255,7	255,0	253,3	249,9	239,5	228,3	208,6	194,8	186,9	184,3
5	38	227,7	229,9	235,2	237,8	239,1	238,7	237,6	236,0	233,3	225,8	217,3	201,0	188,8	181,6	179,2
6	48	218,2	219,6	222,2	222,9	222,3	220,8	219,6	218,1	215,8	210,1	203,6	190,9	180,9	174,7	172,6
7	58	206,4	206,8	206,8	205,9	204,0	202,2	200,9	199,5	197,5	193,2	188,4	179,2	171,6	166,8	165,2
8	68	191,6	190,9	188,5	186,6	184,1	182,2	181,0	179,8	178,2	175,0	171,7	165,7	160,8	157,7	156,6
9	78	172,5	170,9	166,8	164,4	161,9	160,1	159,1	158,2	157,0	154,8	152,9	149,7	145,6	146,5	146,2
10	88	147,0	144,8	140,5	138,3	136,3	135,0	134,3	133,6	132,9	131,7	130,8	130,0	130,3	131,3	132,0
11	97,1	110,0	110,0	110,0	110,0	110,0	110,0	110,0	110,0	110,0	110,0	110,0	110,0	110,0	110,0	110,0

RECOMMENDED OPERATING CONDITIONS (cathode drive)

The voltages are specified with respect to grid 1.

Anode voltage	$V_{a, g5, g4}$	25 kV
Grid 3 (focusing electrode) voltage	V_{g3}	6,5 to 7,45 kV

A. Operation at equal spot cut-off voltage V_k = 140 V

Grid 2 voltage (V_{g2}) adjusted for each gun separately; V_{g2} range 590 to 800 V.

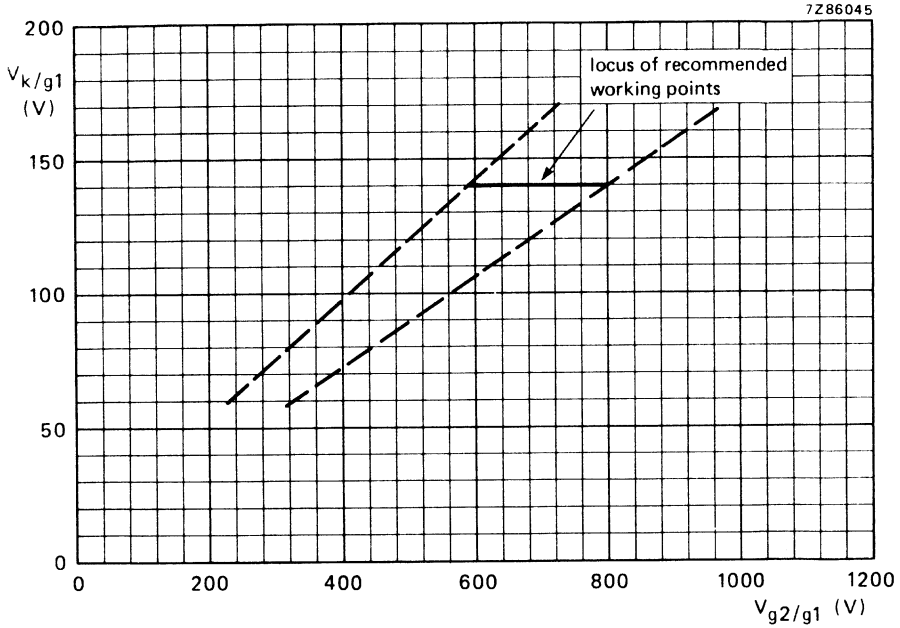

Spot cut-off design chart.

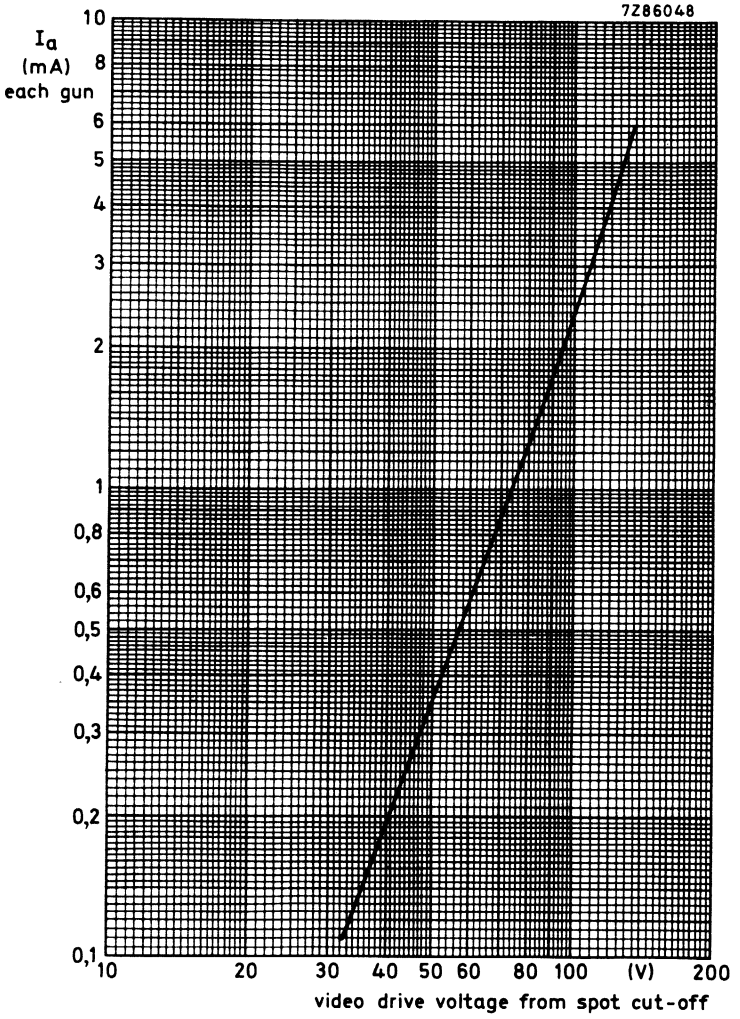

Typical cathode drive characteristic.

V_f = 6,3 V;

$V_{a,\ g5,\ g4}$ = 25 kV;

V_{g3} adjusted for focus;

V_{g2} (each gun) adjusted to provide spot cut-off for V_k = 140 V.

B. Operation at equal grid 2 voltage

Grid 2 voltage (V_{g2}) adjusted for highest gun spot cut-off voltage V_k = 150 V.

Remaining guns adjusted for spot cut-off by means of cathode voltage.

V_{g2} range 630 to 860 V.
V_k range 120 to 150 V.

Adjustment procedure:

Set the cathode voltage (V_k) for each gun at 150 V; increase the grid 2 voltage (V_{g2}) from approx. 600 V to the value at which one of the colours becomes just visible. Now decrease the cathode voltage of the remaining guns so that the other colours also become visible.

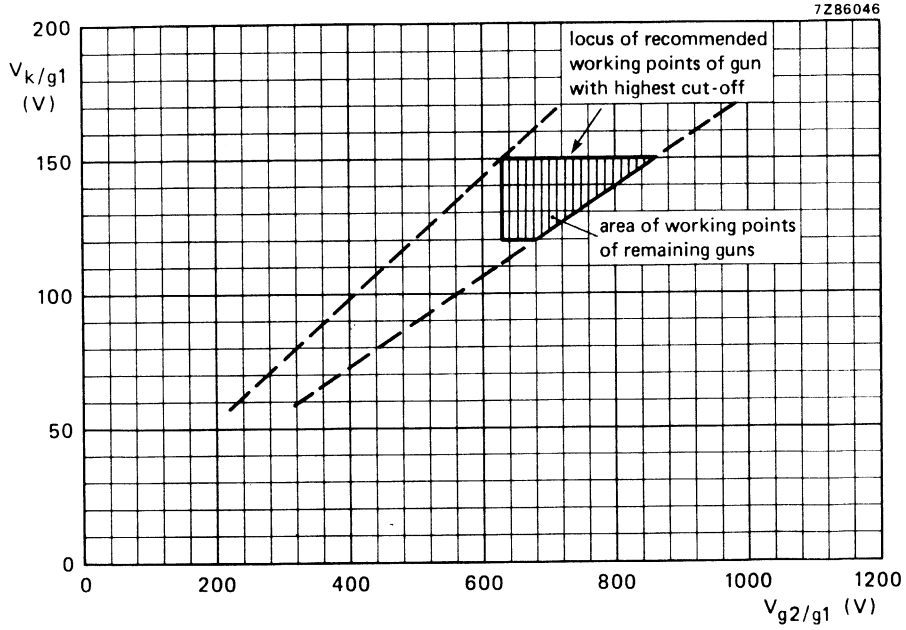

Spot cut-off design chart.

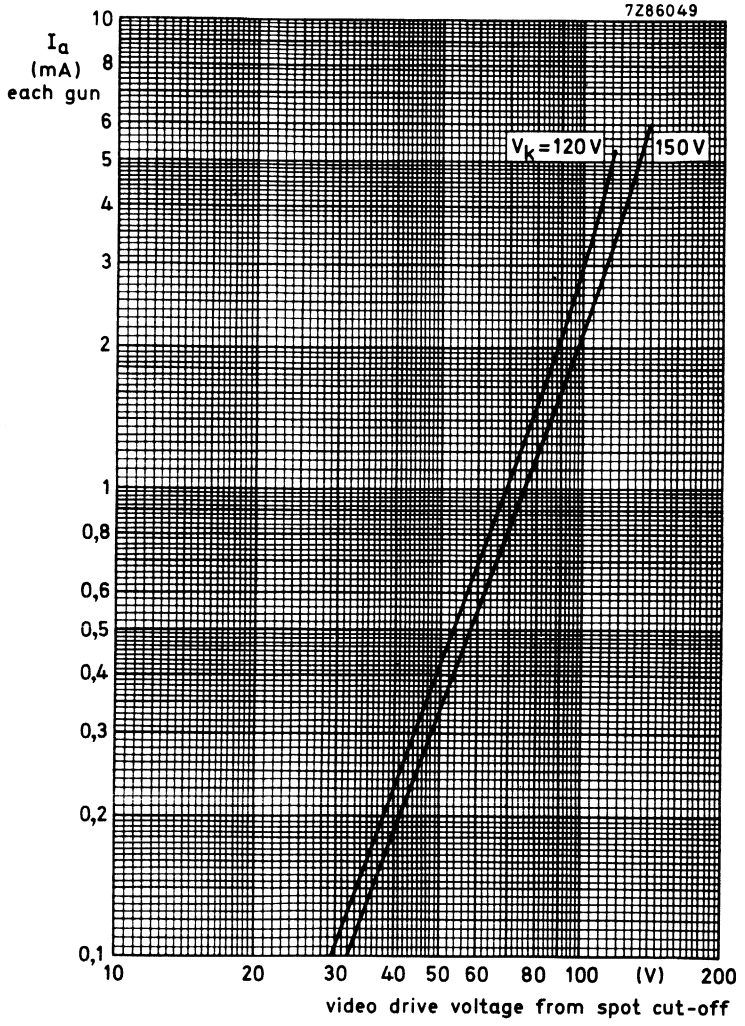

Typical cathode drive characteristic.

V_f = 6,3 V;

$V_{a,\ g5,\ g4}$ = 25 kV;

V_{g3} adjusted for focus;

V_{g2} (each gun) adjusted to provide spot cut-off for V_k = 120 V and 150 V.

EQUIPMENT DESIGN VALUES (each gun if applicable)

The values are valid for anode voltages between 22,5 and 27,5 kV.

The voltages are specified with respect to grid 1.

Grid 3 (focusing electrode) voltage	V_{g3}	26 to 29,8% of anode voltage
Difference in cut-off voltage between guns in one tube	ΔV_k	lowest value is min. 80% of highest value
Heater voltage	V_f	6,3 V at zero beam current
Grid 3 (focusing electrode) current	I_{g3}	−5 to + 5 μA
Grid 2 current	I_{g2}	−5 to + 5 μA
Grid 1 current at V_k = 140 V	I_{g1}	−5 to + 5 μA

To produce white D, CIE co-ordinates x = 0,313, y = 0,329.

Percentage of the total anode current supplied by each gun (typical)

red gun	38,3%
green gun	35,8%
blue gun	25,9%

Ratio of anode current	min.	av.	max.
red gun to green gun	0,7	1,1	1,4
red gun to blue gun	1,1	1,5	2,0
blue gun to green gun	0,5	0,7	1,0

BEAM CENTRING

Maximum centring error in any direction	4,5 mm

LIMITING VALUES (each gun if applicable)

Design maximum rating system unless otherwise stated.

The voltages are specified with respect to grid 1.

Anode voltage	$V_{a, g5, g4}$	max. min.	27,5 kV 22,5 kV		notes 1, 2, 3 note 4
Long-term average current for three guns	I_a	max.	1000	μA	note 5
Grid 3 (focusing electrode) voltage	V_{g3}	max.	9	kV	
Grid 2 voltage	V_{g2}	max.	1200	V	note 6
Cathode voltage					
positive	V_k	max.	400	V	
positive operating cut-off	V_k	max.	200	V	
negative	$-V_k$	max.	0	V	
negative peak	$-V_{kp}$	max.	2	V	
Cathode to heater voltage					
positive	V_{kf}	max.	250	V	
positive peak	V_{kfp}	max.	300	V	note 1
negative	$-V_{kf}$	max.	135	V	
negative peak	$-V_{kfp}$	max.	180	V	note 1
Heater voltage	V_f	6,3 V	+5 −10	% %	notes 1, 7

Notes

1. Absolute maximum rating system.
2. The X-ray dose rate remains below the acceptable value of 36 pA/kg (0,5 mR/h), measured with ionization chamber when the tube is used within its limiting values.
3. During adjustment on the production line this value is likely to be surpassed considerably. It is therefore strongly recommended to first make the necessary adjustments for normal operation without picture tube.
4. Operation of the tube at lower voltages impairs the luminance and resolution, and could impair convergence.
5. The short-term average anode current should be limited by circuitry to 1500 μA.
6. During adjustment on the production line max. 1500 V is permitted.
7. For maximum cathode life and optimum performance it is recommended that the heater supply be designed for 6,3 V at zero beam current.

FLASHOVER PROTECTION

High electric field strengths are present between the gun electrodes of picture tubes. Voltages between gun electrodes may reach values of 20 kV over approx. 1 mm. As a result of the Soft-Flash technology these flashover currents are limited to approx. 60 A offering higher set reliability, optimum circuit protection and component savings.

Primary protective circuitry using properly grounded spark gaps and series isolation resistors (preferably carbon composition) is still necessary to prevent tube damage and damage to the circuitry which is directly connected to the tube socket. The spark gaps should be connected to all picture tube electrodes at the socket according to the figure below; they are not required on the heater pins. No other connections between the outer conductive coating and the chassis are permissible. The spark gaps should be designed for a breakdown voltage at the focusing electrode (g3) of 10,5 kV, and at the other electrodes of 1,5 to 2 kV. The values of the series isolation resistors should be as high as possible (min. 1,5 kΩ) without causing deterioration of the circuit performance. The resistors should be able to withstand an instantaneous surge of 20 kV for the focusing circuit and 12 kV for the remaining circuits without arcing.

Additional information is available on request.

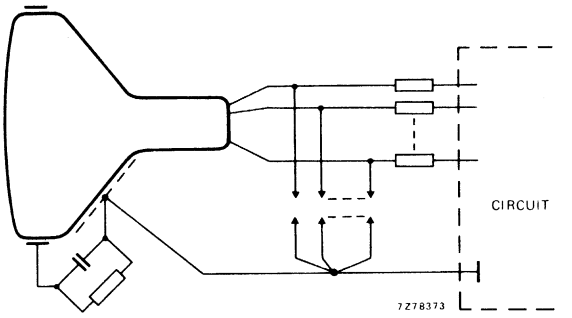

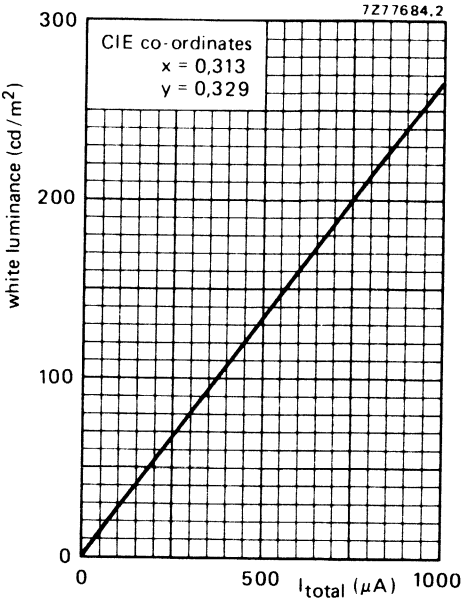

Luminance at the centre of the screen as a function of I_{total}. Scanned area 444,2 mm x 334,2 mm.

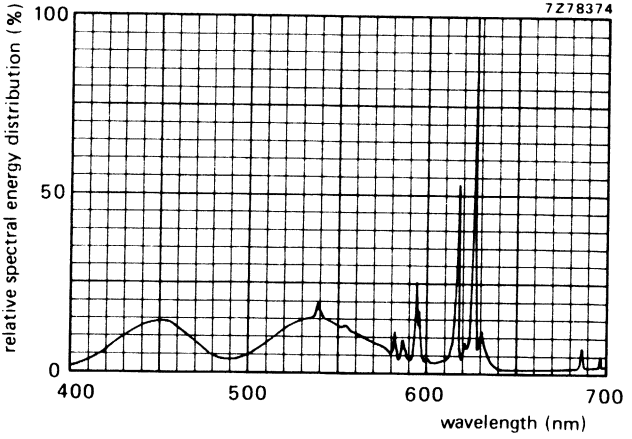

Simultaneous excitation of red, green and blue phosphor, measured in a tube, to produce white of x = 0,313, y = 0,329. Exact shape of the peaks depends on the resolution of the measuring apparatus.

Colour co-ordinates:	x	y
red	0,635	0,340
green	0,315	0,600
blue	0,150	0,060

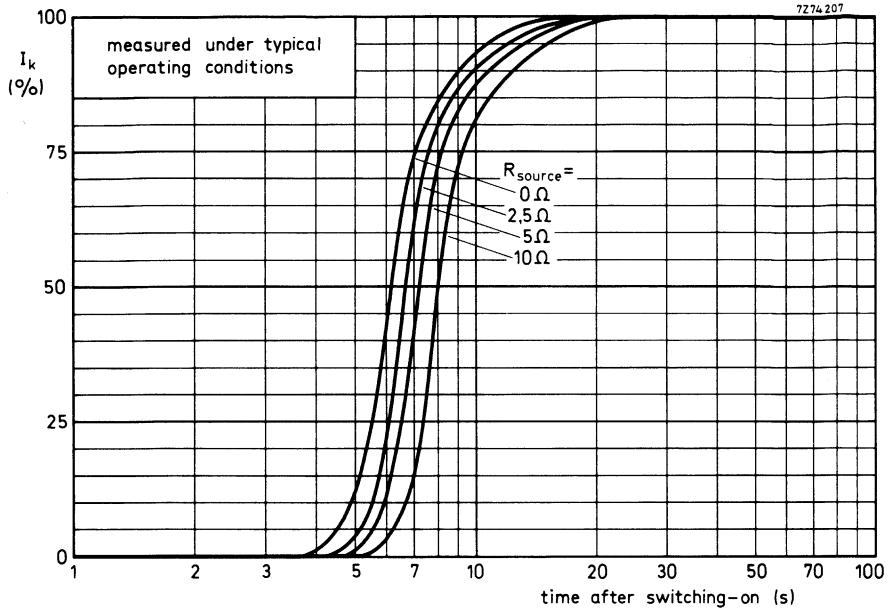

Cathode heating time to attain a certain percentage of the cathode current at equilibrium conditions.

DEGAUSSING

The picture tube is provided with an internal magnetic shield. This shield and the shadow mask with its suspension system may be provided with an automatic degaussing system, consisting of two coils covering top and bottom cone parts.

For proper degaussing an initial magnetomotive force (m.m.f.) of 250 ampere-turns is required in each of the coils. This m.m.f. has to be gradually decreased by appropriate circuitry. To prevent beam landing disturbances by line-frequency currents induced in the degaussing coils, these coils should be shunted by a capacitor of sufficiently high value. In the steady state, no significant m.m.f. should remain in the coils ($\leqslant$ 0,25 ampere-turns).

If single-phase power rectification is employed in the TV circuitry, provision should be included to prevent asymmetric distortion of the a.c. voltage applied to the degaussing circuit due to high d.c. inrush currents.

To ease the mounting of the coils, the rimband is provided with rectangular holes. An example is given below.

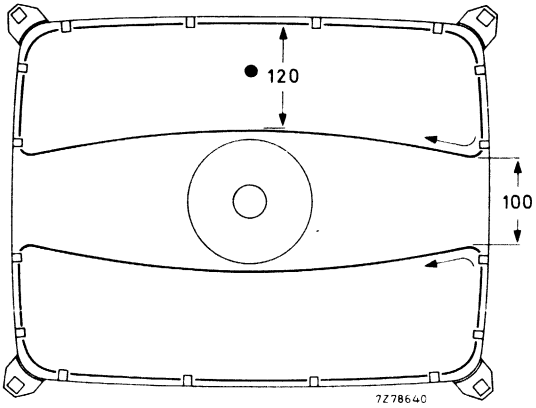

Position of degaussing coils on the picture tube.

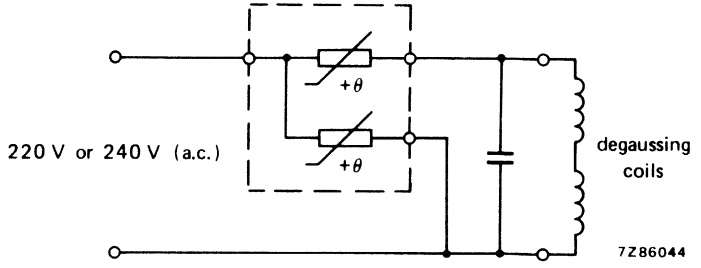

Degaussing circuit using dual PTC thermistor 2322 662 98009.

Data of each degaussing coil

Circumference	120 cm
Number of turns	50
Copper-wire diameter	0,35 mm
Aluminium-wire diameter	0,45 mm
Resistance	11 Ω

Replaced by AT1860

DEFLECTION UNIT

QUICK REFERENCE DATA

Picture tube	A56-540X
gun arrangement	in line
diagonal	56 cm (22 in)
neck diameter	36,5 mm
Deflection angle	110°
Line deflection current, edge to edge at 25 kV	5,0 A(p-p)
Inductance of line coils	1,5 mH
Field deflection current, edge to edge at 25 kV	1,95 A(p-p)
Resistance of field coils (potentiometer R1 included)	5,9 Ω

CONNECTIONS

(See also Fig. 2).

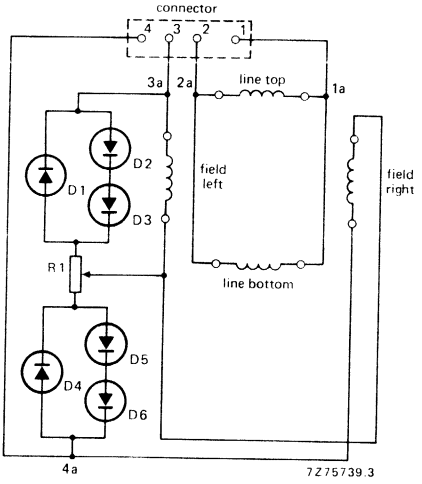

Fig. 1.

Notes:

- Contacts 1 and 1a must be connected to the live side of the line circuitry, contacts 3 and 3a must be connected to the life side of the field circuitry.
- Matching female Stocko connector: MKF 804-1-0-404.
- D1 to D6 = BAS11, BAX18, BAX18A, BAV10 or BAW62.
- R1 = 180 Ω.

MECHANICAL DATA

Outlines

Dimensions in mm

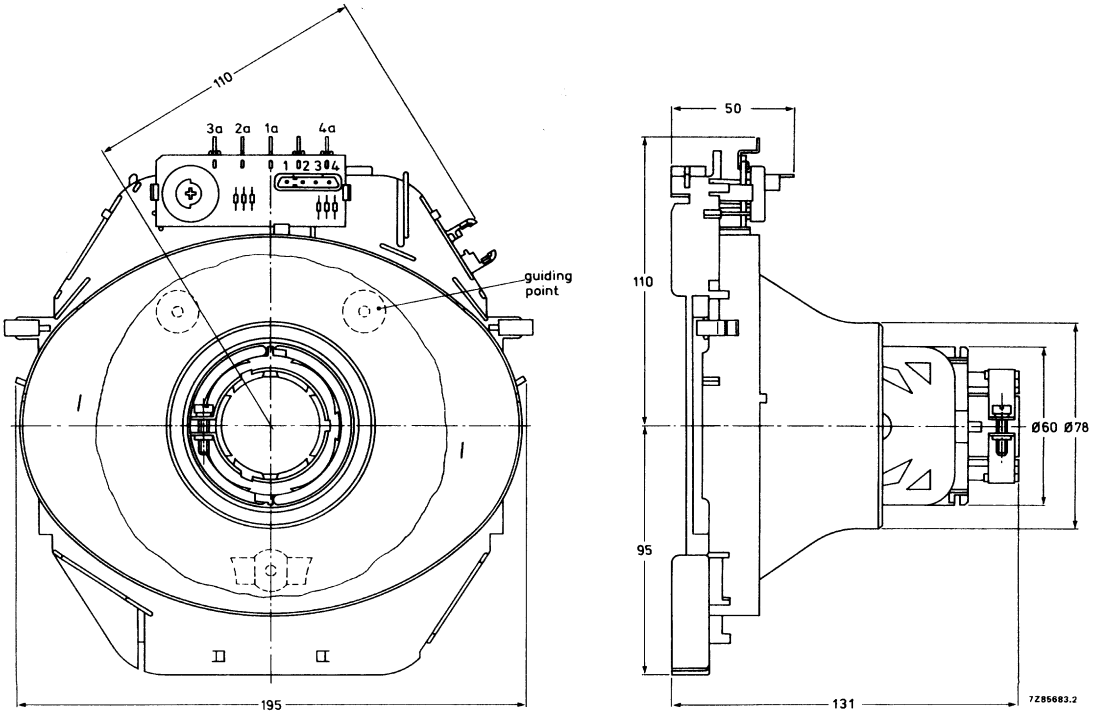

Fig. 2 Maximum dimensions.

DEFLECTION UNIT

QUICK REFERENCE DATA

Picture tube	A56-540X
gun arrangement	in line
diagonal	56 cm (22 in)
neck diameter	36,5 mm
Deflection angle	110°
Line deflection current, edge to edge at 25 kV	5,0 A(p-p)
Inductance of line coils	1,5 mH
Field deflection current, edge to edge at 25 kV	1,95 A(p-p)
Resistance of field coils (potentiometer R1 included)	5,9 Ω

APPLICATION

This deflection unit is for use with 110° in-line colour picture tube A56-540X, in conjunction with e.g.: diode-split line output transformer AT2076/70A and linearity control unit AT4042/42 or AT4042/30.

DESCRIPTION

The deflection unit consists of flangeless line and field deflection coils, a one piece ferrite ring and a one piece coil carrier.

Connection to the deflection coils can be made via a connector (contact pins 1 to 4) or solder tags 1a to 4a, see Fig. 1.

MECHANICAL DATA

Outlines

Dimensions in mm

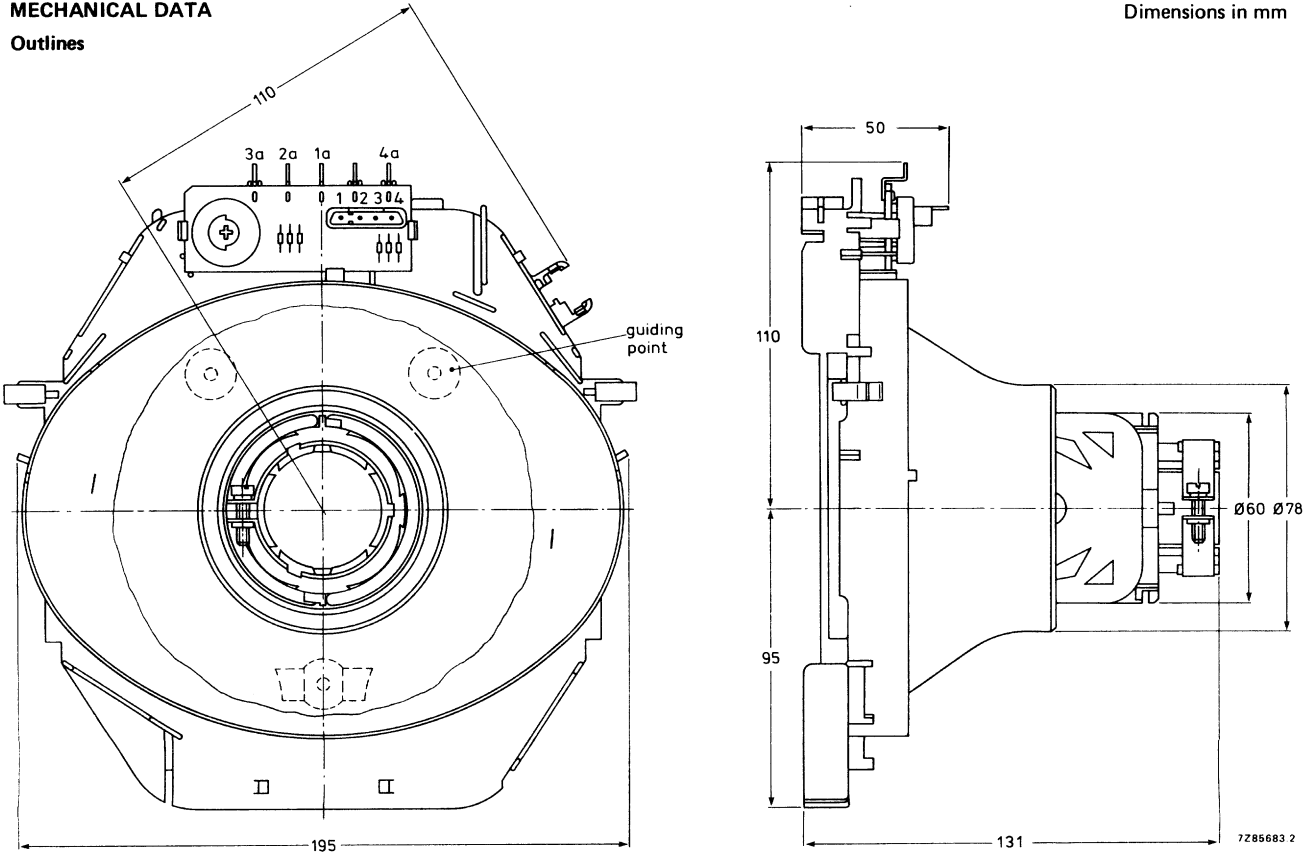

Fig. 1 Maximum dimensions.

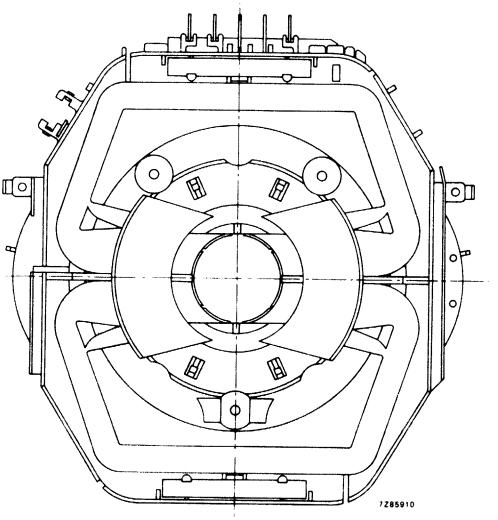

Fig. 1b. Front view.

The deflection unit fits a tube with a neck diameter of $36{,}5\ ^{+1{,}3}_{-0}$ mm.

Maximum operating temperature (average copper temperature measured with resistance method)	+ 90 °C
Storage temperature range	−20 to + 90 °C
Flame retardent	according to UL1413, category 94, V-1

Mounting

The deflection unit can simply be pushed on the neck of a picture tube.

Both on the neck of the tube and on the deflection unit, there are 3 reference surfaces to establish angular and axial positioning.

Once the unit is mounted the combination is perfectly aligned and requires no further adjustment for static convergence, colour purity and raster orientation.

The unit must be pressed against the reference surfaces on the cone of the picture tube with a force of 20 ± 5 N and fixed by tightening teh screw in the clamping ring at the rear with a torque of $1{,}0\ ^{+0{,}4}_{-0{,}2}$ Nm.

Maximum axial force exerted on the screw is 20 N.

ENVIRONMENTAL TEST SPECIFICATIONS

Vibration	IEC 68-2-6 (test Fc)
Shock	IEC 68-2-27 (test Ea; 35g)
Bump	IEC 68-2-29 (test Eb; 25g)
Cold	IEC 68-2-1 (test Ab)
Dry heat	IEC 68-2-2 (test Bb)
Damp heat, steady state	IEC 68-2-3 (test Ca)
Cyclic damp heat	IEC 68-2-30 (test Db)
Change of temperature	IEC 68-2-14 (test Nb)

ELECTRICAL DATA

Line coils	
Inductance at 1 V (r.m.s.), 1 kHz	1,5 mH ± 4%
Resistance at 25 °C	1,3 Ω ± 10%
Magnetic flux	7,6 mWb ± 5%
Line deflection current, edge to edge, at 25 kV	5,0 A(p-p)
Field coils	
Inductance at 1 V (r.m.s.), 1 kHz	10,0 mH ± 10%
Resistance at 25 °C (potentiometer R1 included)	5,9 Ω ± 7%
Field deflection current, edge to edge, at 25 kV	1,95 A(p-p)
Cross-talk	a voltage of 1 V, 15 kHz applied to the line coils causes no more than 20 mV across the field coils
Insulation resistance	
between line and field coils, at 3 kV (d.c.)	> 10 MΩ
between field coils and ferrite ring, at 300 V (d.c.)	> 10 MΩ

Connections

(See also Fig. 1).

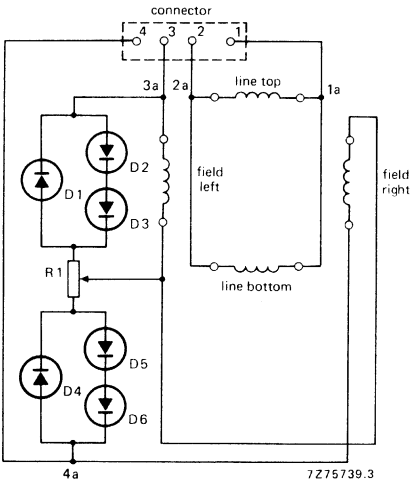

Fig. 2.

Notes:

- Contacts 1 and 1a must be connected to the live side of the line circuitry, contacts 3 and 3a must be connected to the live side of the field circuitry.
- Matching female Stocko connector: MKF 804-1-0-404.
- D1 to D6 = BAS11, BAX18, BAX18A, BAV10 or BAW62.
- R1 = 180 Ω.

FLAT SQUARE Hi-Bri COLOUR PICTURE TUBE

- Flat and square screen
- 110° deflection
- In-line, hi-bi potential A R T* gun with quadrupole cathode lens
- 29,1 mm neck diameter
- Mask with corner suspension
- Hi-Bri technology
- Pigmented phosphors
- Quick-heating low-power cathodes
- Soft-flash
- Slotted shadow mask optimized for minimum moiré at 625 lines systems
- Internal magnetic shield
- Internal multipole
- Reinforced envelope for push-through mounting
- Anti-crackle coating

QUICK REFERENCE DATA

Deflection angle	110°
Minimum useful screen diagonal	59 cm
Overall length	39 cm
Neck diameter	29,1 mm
Heating	6,3 V, 310 mA
Focusing voltage	31% of anode voltage

* Aberration Reducing Triode.

ELECTRON-OPTICAL DATA

Electron gun system	unitized triple-aperture electrodes; aberration reducing triode
Focusing method	electrostatic
Focus lens	hi-bi-potential
Deflection method	magnetic
Deflection angles	
diagonal	110°
horizontal	97°
vertical	77°

ELECTRICAL DATA

Capacitances			
anode to external conductive coating	$C_{a, g5, g4/m}$	max.	2000 pF
		min.	1600 pF
anode to metal rimband	$C_{a, g5, g4/m'}$		300 pF
cathodes of all guns (connected in parallel) to all other electrodes	C_k		15 pF
cathode of any gun to all other electrodes	C_{kR}, C_{kG}, C_{kB}		5 pF
grid 3 (focusing electrode) to all other electrodes	C_{g3}		6 pF
grid 1 to all other electrodes	C_{g1}		17 pF
grid 2 to all other electrodes	C_{g2}		4,5 pF
Resistance between rimband and external conductive coating		min.	50 MΩ
Heating: indirect by a.c. (preferably mains or line frequency) or d.c.			
heater voltage	V_f		6,3 V
heater current	I_f		310 mA

OPTICAL DATA

Screen	metal-backed vertical phosphor stripes; phosphor lines follow glass contour
Screen finish	satinized
Useful screen dimensions	
diagonal	min. 590 mm
horizontal axis	min. 478 mm
vertical axis	min. 363 mm
area	min. 1722 cm²
Positional accuracy of the screen with respect to the glass contour	see Figure on the next page
Phosphors	
red	pigmented europium activated rare earth
green	sulphide type
blue	pigmented sulphide type
Persistence	medium short

A = 180,3 mm
B = 257,7 mm
C = 123,0 mm
D = 200,2 mm
E = 25,2 mm

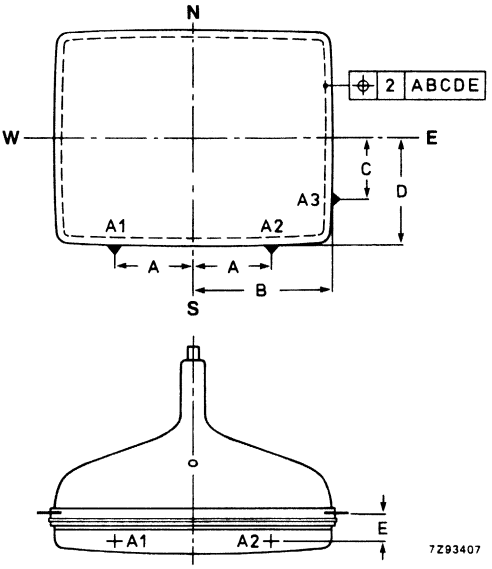

		x	y
Colour co-ordinates			
red		0,635	0,340
green		0,315	0,600
blue		0,150	0,060
Centre-to-centre distance of identical colour phosphor stripes		approx. 0,8 mm	
Light transmission of face glass at screen centre		67%	
Luminance at the centre of the screen	L	165 cd/m² *	

MECHANICAL DATA (see also the figures on the following pages)

Overall length	392 ± 6 mm
Neck diameter	$29{,}1^{+1{,}4}_{-0{,}7}$ mm
Base	JEDEC B10-277
Anode contact	small cavity contact J1-21, IEC 67-III-2
Mounting position	anode contact on top
Implosion protection	rimband provided with skirt and slots to accommodate clips for mounting of degaussing coils
Net mass	approx. 19 kg

Handling

During shipment and handling the tube should not be subjected to accelerations greater than 35g in any direction.

* Tube setting adjusted to produce white D (x = 0,313, y = 0,329), focused raster, current density 0,4 μA/cm².

MECHANICAL DATA (continued)

Dimensions in mm

Notes are given after the drawings.

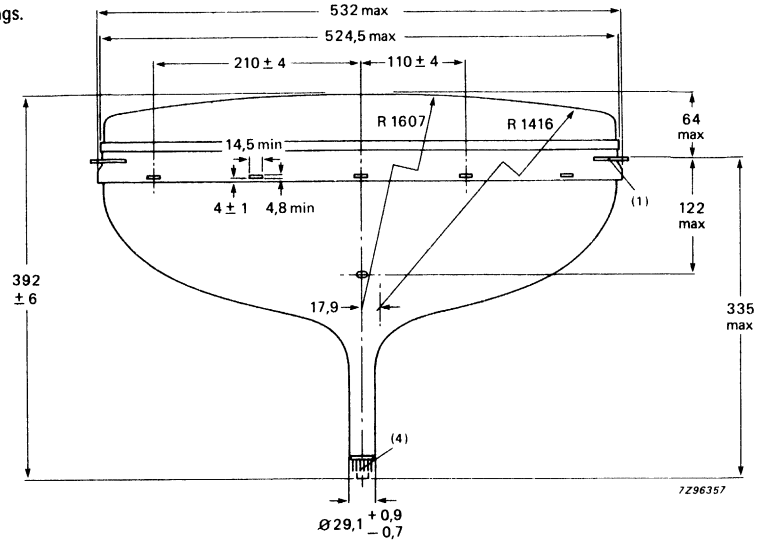

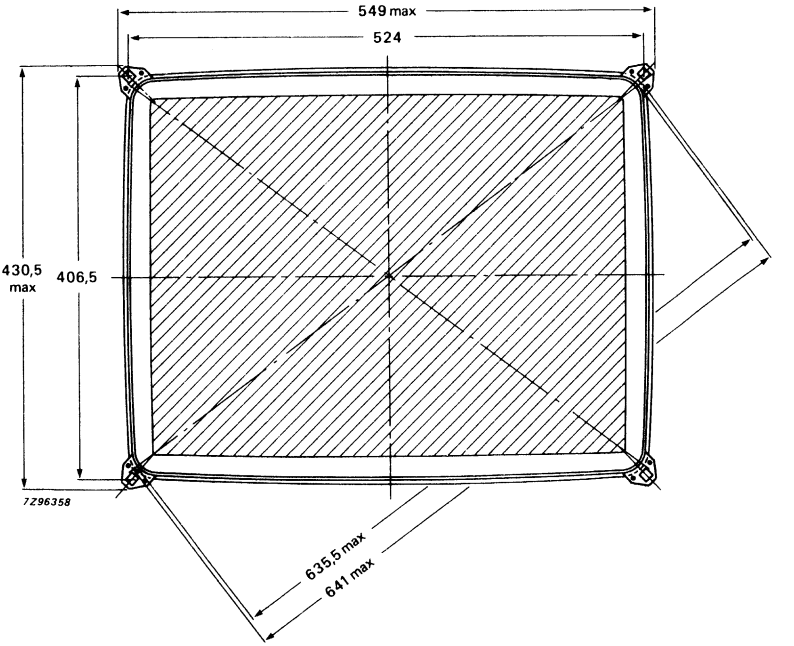

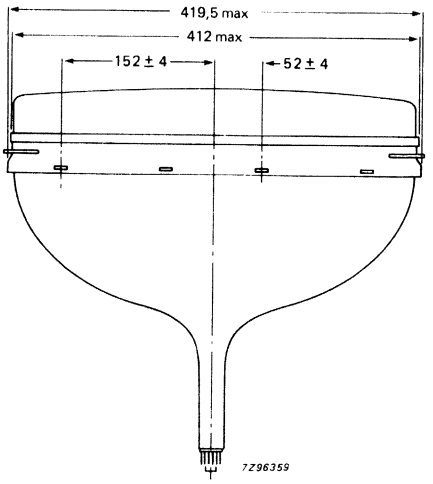
419,5 max
412 max
152 ± 4
52 ± 4
7Z96359

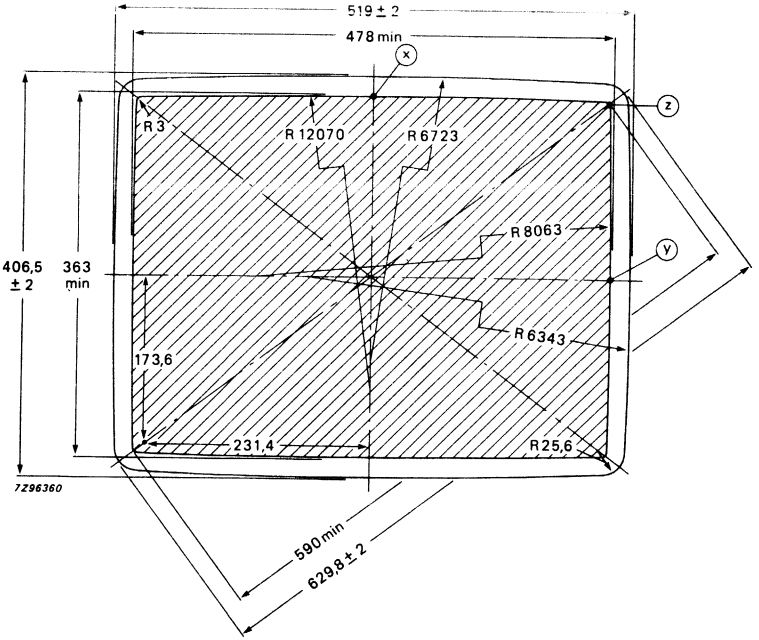
519 ± 2
478 min
x
z
y
R 3
R 12070
R 6723
R 8063
R 6343
406,5 ± 2
363 min
173,6
231,4
R 25,6
590 min
629,8 ± 2
7Z96360

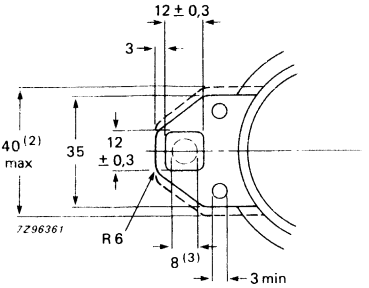
12 ± 0,3
3
40 (2) max
35
12 ± 0,3
R 6
8 (3)
3 min
7Z96361

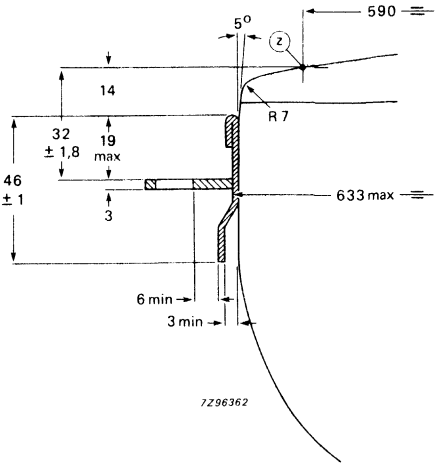
5°
590
z
14
R 7
32 ± 1,8
19 max
46 ± 1
633 max
3
6 min
3 min
7Z96362

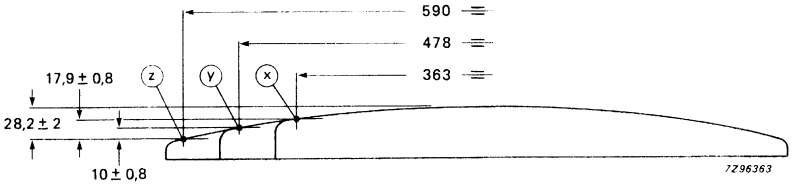
590
478
363
17,9 ± 0,8
z
y
x
28,2 ± 2
10 ± 0,8
7Z96363

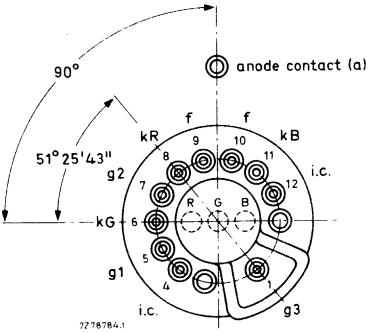
90°
anode contact (a)
51°25'43"
kR
f
f
kB
g2
i.c.
kG
R
G
B
g1
i.c.
g3
7Z78784.1

Notes to outline drawings on the preceding pages

1. The displacement of any lug with respect to the plane through the three other lugs is max. 1,5 mm.
2. Minimum space to be reserved for mounting lug.
3. The position of the mounting screw in the cabinet must be within a circle of 8 mm diameter drawn around the true geometrical positions, i.e. the corners of a rectangle of 524 mm x 406,5 mm.
4. The socket for this base should not be rigidly mounted; it should have flexible leads and be allowed to move freely. After mounting of the tube in the cabinet note that the position of the base can fall within a circle, having a diameter of max. 50 mm, concentric with an imaginary tube axis.

Sagittal heights with reference to screen centre at the edge of the minimum useful screen

coordinates		sagittal
x	y	height
mm	mm	mm
0 *	181,5	10,3
20	181,5	10,4
40	181,4	10,8
60	181,3	11,5
80	181,2	12,5
100	181,0	13,5
120	180,8	14,9
140	180,6	16,6
160	180,3	18,5
180	180,0	20,7
200	179,6	23,2
220	179,3	26,0
235,9 **	177,1	28,2
237,3	160	26,5
237,7	140	24,5
238,0	120	22,8
238,3	100	21,4
238,6	80	20,3
238,8	60	19,4
238,9	40	18,7
239,0	20	18,3
239,0▲	0	18,2

* Point (x).
** Diagonal.
▲ Point (y).

10-pin base; JEDEC B10-277

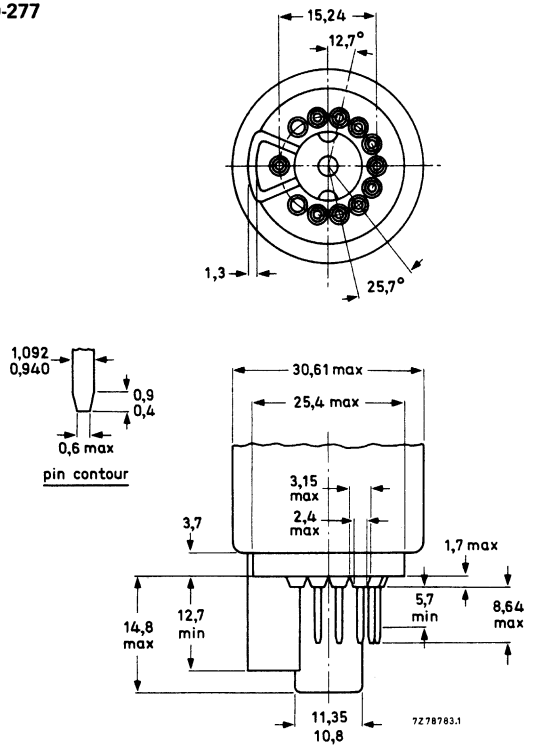

Cavity cap JEDEC J-21, IEC 67-III-2

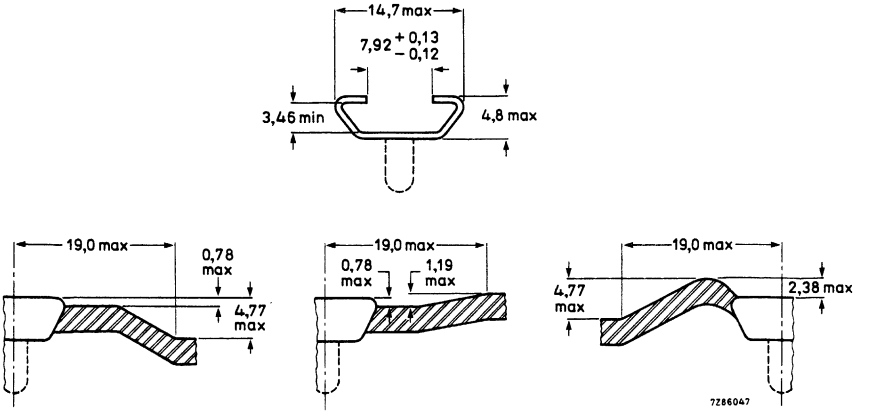

Maximum cone contour

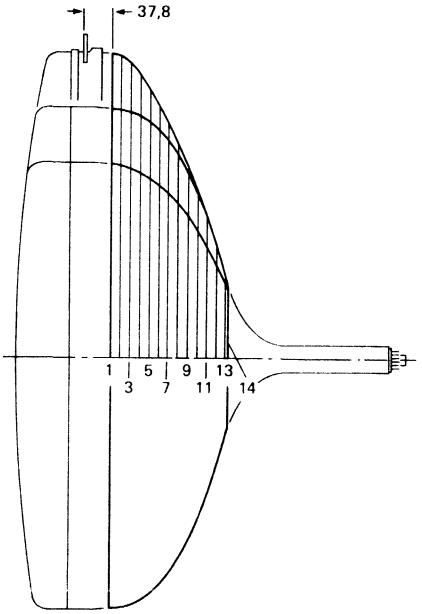

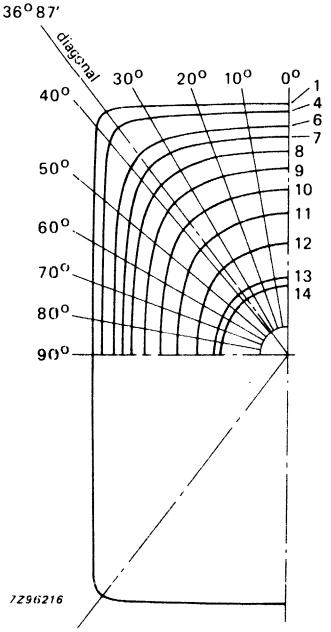

section	nom. distance from section 1	distance from centre										
		0°	10°	20°	30°	36,87°	40°	50°	60°	70°	80°	90°
1	0,00	257,6	261,5	273,7	296,3	314,1	307,9	260,3	231,0	213,3	203,7	200,6
2	10,00	256,9	260,7	272,8	294,9	311,7	305,1	258,6	229,7	212,1	202,6	199,6
3	20,00	254,8	258,5	270,2	291,3	304,7	297,9	254,5	226,3	209,2	199,8	196,9
4	30,00	250,9	254,5	265,5	284,7	293,0	286,6	248,0	221,0	204,5	195,5	192,6
5	40,00	245,1	248,4	258,5	274,1	277,4	271,6	239,0	213,9	198,3	189,7	187,0
6	50,00	237,0	239,9	248,7	260,3	260,0	254,9	228,1	205,4	190,7	182,7	180,1
7	60,00	225,8	228,3	235,6	243,3	241,1	236,7	214,8	194,8	181,5	174,0	171,7
8	70,00	210,7	212,9	218,6	223,2	220,3	216,6	199,0	181,9	170,0	163,2	161,1
9	80,00	191,7	193,4	197,8	200,5	197,6	194,6	180,4	166,1	155,8	149,8	147,9
10	90,00	170,1	171,5	174,6	175,9	173,0	170,4	159,1	147,5	138,8	133,6	131,9
11	100,00	145,8	146,7	148,5	148,4	145,6	143,5	135,0	126,2	119,3	115,1	113,7
12	110,00	115,2	115,8	116,7	116,2	114,4	113,3	108,4	103,0	98,4	95,5	94,4
13	120,00	79,9	80,1	80,3	80,1	79,8	79,6	78,7	77,5	76,4	75,5	75,1
14	121,4	74,4	74,5	74,5	74,5	74,4	74,3	73,9	73,4	72,9	72,5	72,3

TYPICAL OPERATING CONDITIONS

The voltages are specified with respect to grid 1.

Anode voltage	$V_{a,g4}$	25 kV
Grid 3 (focusing electrode) voltage	V_{g3}	7,25 to 8,25 kV
Grid 2 voltage for a spot cut-off voltage V_k = 130 V	V_{g2}	see below
Heater voltage under operating conditions	V_f	6,3 V

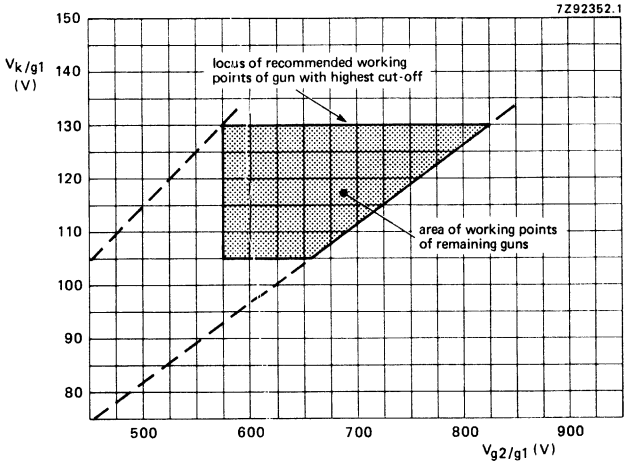

Spot cut-off design chart.

Grid 2 voltage (V_{g2}) adjusted for highest gun spot cut-off voltage V_k = 130 V.

Remaining guns adjusted for spot cut-off by means of cathode voltage

V_{g2} range 575 to 825 V;

V_k range 105 to 130 V.

Adjustment procedure:

Set the cathode voltage (V_k) for each gun at 130 V; increase the grid 2 voltage (V_{g2}) from approx. 550 V to the value at which one of the colours become just visible. Now decrease the cathode voltage of the remaining guns so that the other colours also become visible.

EQUIPMENT DESIGN VALUES

The values are valid for anode voltages between 20 and 27,5 kV.
The voltages are specified with respect to grid 1.

Grid 3 (focusing electrode) voltage	V_{g3}	29 to 33% of anode voltage
Grid 2 voltage and cathode voltage for visual extinction of focused spot	V_{g2} and V_k	see cut-off design chart
Difference in cut-off voltages between guns in any tube	ΔV_k	lowest value > 80% of highest value
Heater voltage	V_f	6,3 V at zero beam current
Video drive characteristics		see graphs*
Grid 3 (focusing electrode) current	I_{g3}	−2 to + 2 μA
Grid 2 current	I_{g2}	−2 to + 2 μA
Grid 1 current under cut-off conditions	I_{g1}	−2 to + 2 μA
To produce white of 6500K + 7 M.P.C.D. (CIE-co-ordinates x = 0,313, y = 0,329)		
Percentage of the total anode current supplied by each gun (typical)		
red gun		38,3%
green gun		35,8%
blue gun		25,9%
Ratio of anode currents		
red gun to green gun		min. 0,8
		average 1,1
		max. 1,4
red gun to blue gun		min. 1,1
		average 1,5
		max. 1,9
blue gun to green gun		min. 0,5
		average 0,7
		max. 1,0
Insulation resistance between each cathode and grid 1 and heater		min. 50 MΩ

* For optimum picture performance it is recommended that the cathodes are not driven below + 1 V.

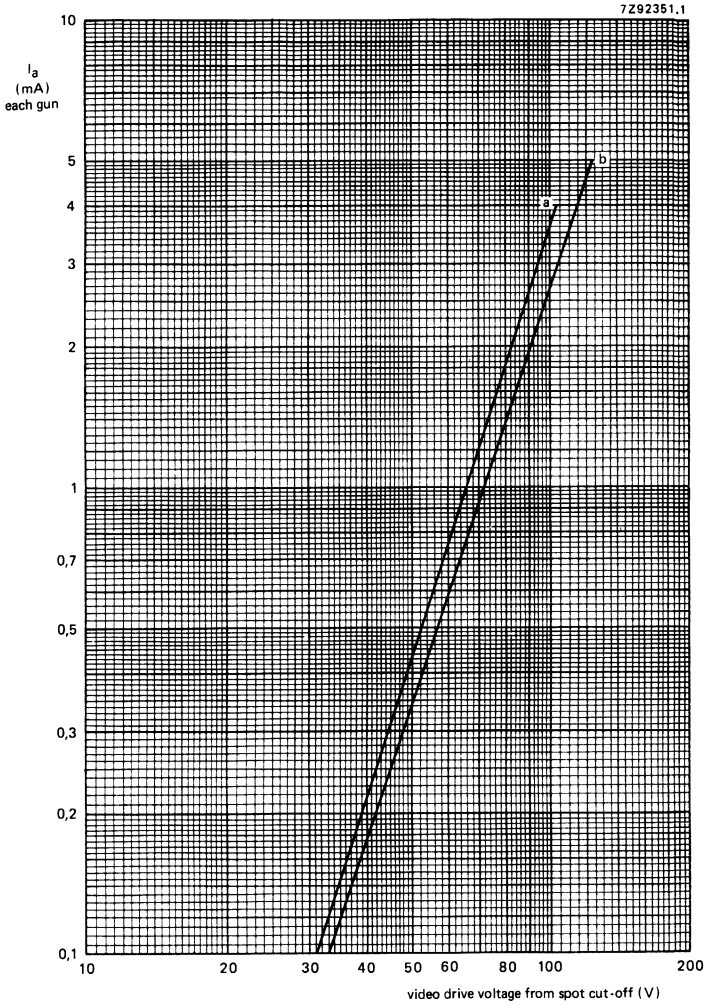

Typical cathode drive characteristic.

V_f = 6,3 V;

$V_{a,g4}$ = 25 kV;

V_{g3} adjusted for focus;

V_{g2} (each gun) adjusted to provide spot cut-off for V_k = 105 V (curve a) and V_k 130 V (curve b).

LIMITING VALUES (Design maximum rating system unless otherwise stated)

The voltages are specified with respect to grid 1.

				notes
Anode voltage	$V_{a,g4}$	max.	27,5 kV	1, 2, 3
		min.	20 kV	1, 4
Long-term average current for three guns	I_a	max.	1000 μA	5
Grid 3 (focusing electrode) voltage	V_{g3}	max.	11 kV	
Grid 2 voltage	V_{g2}	max.	1200 V	6
Cathode voltage				
positive	V_k	max.	400 V	
positive operating cut-off	V_k	max.	200 V	
negative	$-V_k$	max.	0 V	
negative peak	$-V_{kp}$	max.	2 V	
Cathode to heater voltage				
positive	V_{kf}	max.	250 V	
positive peak	V_{kfp}	max.	300 V	1
negative	$-V_{kf}$	max.	135 V	
negative peak	$-V_{kfp}$	max.	180 V	1
Heater voltage	V_f		6,3 V $^{+5\ \%}_{-10\ \%}$	1, 7

LIMITING CIRCUIT VALUES

Grid 3 circuit resistance	R_{g3}	max.	70 MΩ	
Grid 1 to cathode circuit resistance (each gun)	R_{g1k}	max.	0,75 MΩ	

BEAM CENTRING

Maximum centring error in any direction	4	mm

Notes

1. Absolute maximum rating system
2. The X-ray dose rate remains below the acceptable value of 36 pA/kg (0,5 mR/h), measured with ionization chamber when the tube is used within its limiting values.
3. During adjustment on the production line this value is likely to be surpassed considerably. It is therefore strongly recommended to first make the necessary adjustments for normal operation with-output picture tube.
4. Operation of the tube at lower voltages impairs the luminance and resolution, and could impair convergence.
5. The short-term average anode current should be limited by circuitry to 1500 μA.
6. During adjustment on the production line max. 1500 V is permitted.
7. For maximum cathode life it is recommended that the heater supply be designed for 6,3 V at zero beam current.

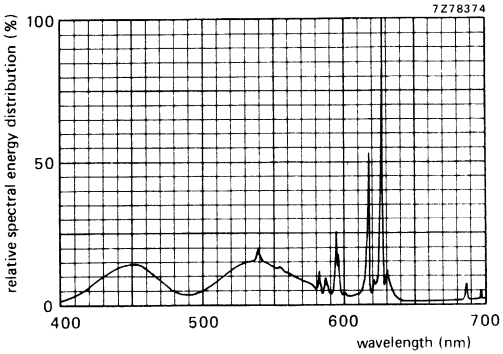

Simultaneous excitation of red, green and blue phosphor, measured in a tube, to produce white of x = 0,313, y = 0,329. Exact shape of the peaks depends on the resolution of the measuring apparatus.

Colour co-ordinates:	x	y
red	0,635	0,340
green	0,315	0,600
blue	0,150	0,060

DEGAUSSING

The picture tube is provided with an internal magnetic shield. This shield and the shadow mask with its suspension system may be provided with an automatic degaussing system, consisting of two coils covering top and bottom cone parts, or one large coil.

For proper degaussing an initial magnetomotive force (m.m.f.) of 300 ampere-turns is required in each of the coils. This m.m.f. has to be gradually decreased by appropriate circuitry. To prevent beam landing disturbances by line-frequency currents induced in the degaussing coils, these coils should be shunted by a capacitor of sufficiently high value. In the steady state, no significant m.m.f. should remain in the coils ($\leqslant$ 0,15 ampere-turns).

If single-phase power rectification is employed in the TV circuitry, provision should be included to prevent asymmetric distortion of the a.c. voltage applied to the degaussing circuit due to high d.c. inrush currents.

To ease the mounting of the coils, the rimband is provided with rectangular holes.

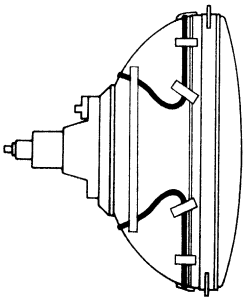

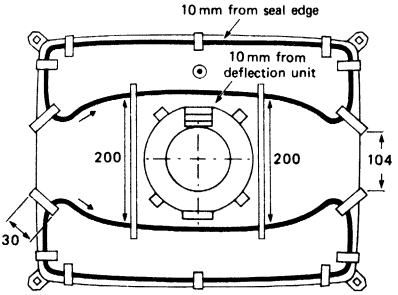

length of degaussing coil : 1,35 m

Double-coil system.

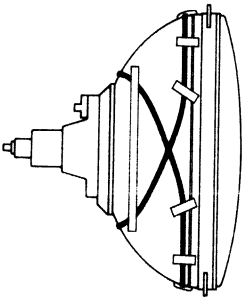

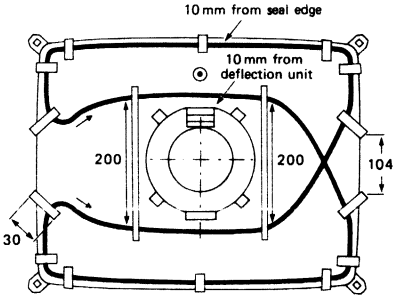

length of degaussing coil : 2,77 m

Single-coil system.

7Z91928

Degaussing circuit using
dual PTC thermistor 2322 662 98009;
C = 100 nF.

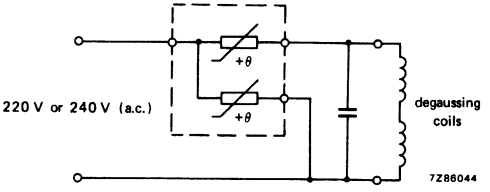

Data of each degaussing coil

	double-coil system	single-coil system
Circumference	135 cm	277 cm
Number of turns	60	60
Copper-wire diameter	0,4 mm	0,4 mm
Aluminium-wire diameter	0,5 mm	0,5 mm
Resistance	11 Ω	22 Ω

110° FLAT SQUARE COLOUR PICTURE TUBE ASSEMBLY

- Factory preset tube/coil assembly
- Self-converging and north-south raster correction free
- 59 cm, 110° colour picture tube A59EAK00X
- Double saddle deflection unit AT6010

QUICK REFERENCE DATA

Deflection angle	110°
Minimum useful screen diagonal	59 cm
Overall length	39 cm
Neck diameter	29,1 mm

MECHANICAL DATA

Dimensions in mm

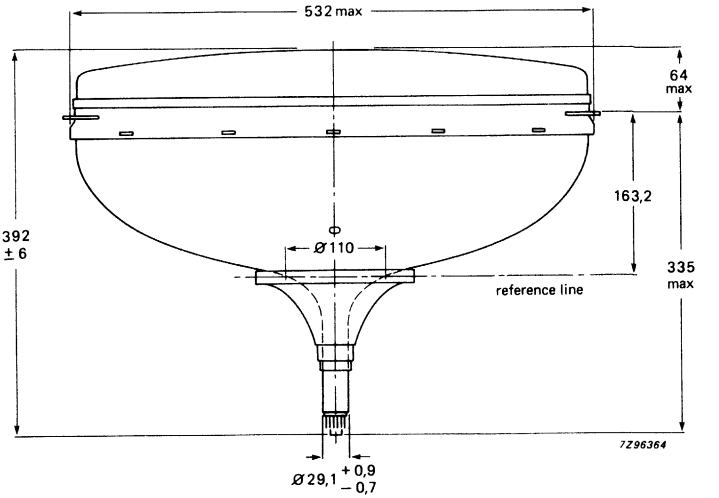

Net mass of tube assembly: 20 kg

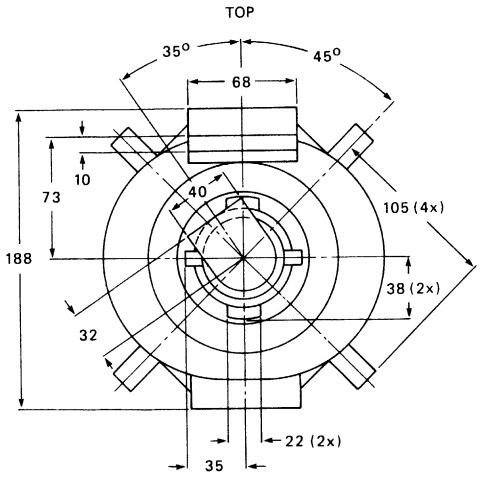

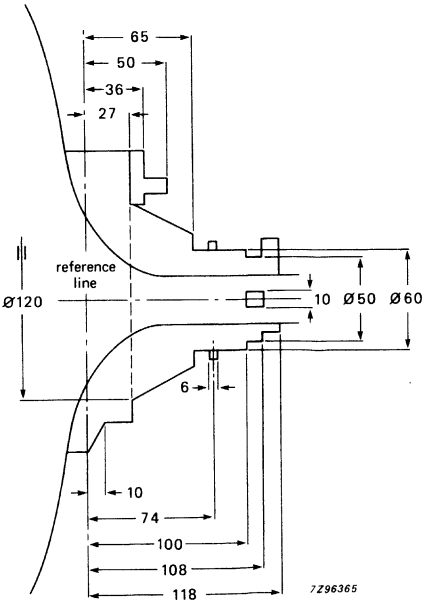

Yoke clearance.

ELECTRICAL DATA OF DEFLECTION UNIT

Line coils	
Inductance at 1 V (r.m.s.), 1 kHz	parallel connected 1,85 mH
Resistance at 25 °C	1,85 Ω
Magnetic flux	7,6 mWb ± 5%
Line deflection current, edge to edge, at 25 kV	4,1 A (p-p)
Field coils	
Inductance at 1 V (r.m.s.), 1 kHz	series connected 11 mH
Resistance at 25 °C	6,5 Ω
Field deflection current, edge to edge, at 25 kV	1,7 A (p-p)

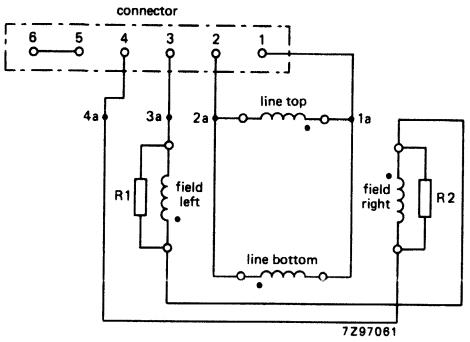

Electrical diagram.
The beginning of the windings is indicated with ●.
R1 = R2 = 100 Ω, 0,25 W.
Matching Stocko connector MKF 806-1-0-606.

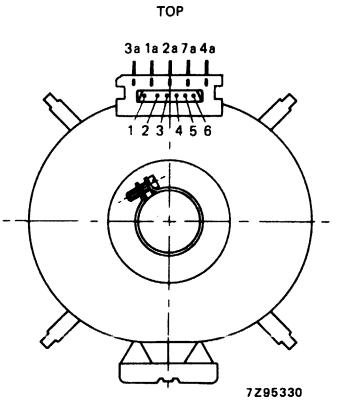

Terminal location.

110° FLAT SQUARE COLOUR PICTURE TUBE ASSEMBLY

- Factory preset tube/coil assembly
- Self-converging and north-south raster correction free
- 59 cm, 110° colour picture tube A59EAK00X
- Double saddle deflection unit AT6010

QUICK REFERENCE DATA

Deflection angle	110°
Minimum useful screen diagonal	59 cm
Overall length	39 cm
Neck diameter	29,1 mm

MECHANICAL DATA

Dimensions in mm

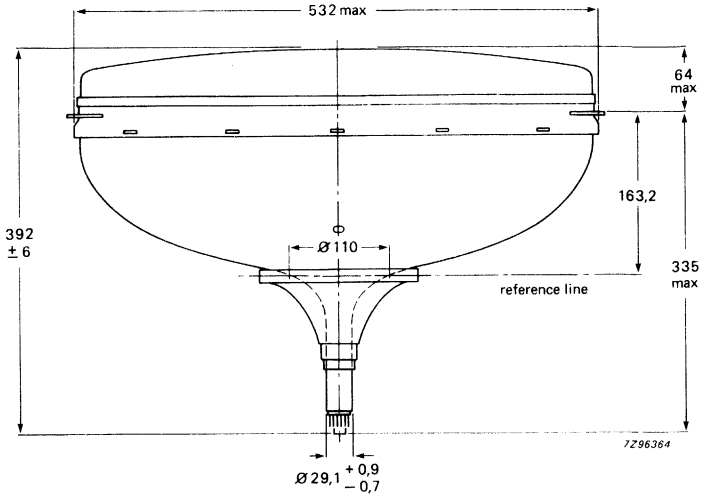

Net mass of tube assembly: 20 kg.

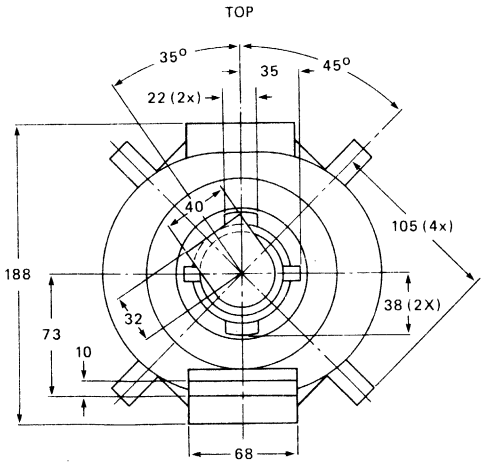

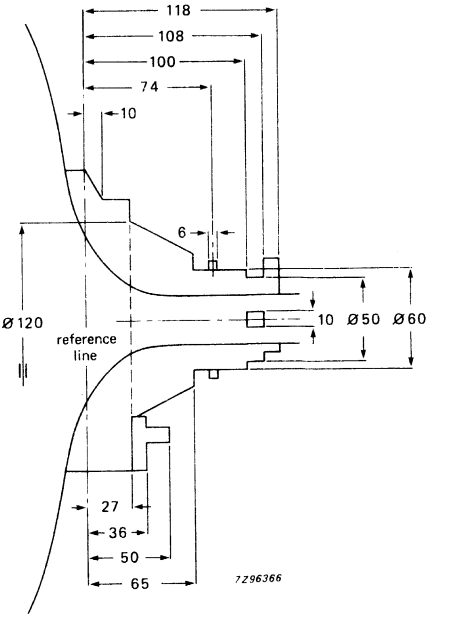

Yoke clearance.

ELECTRICAL DATA OF DEFLECTION UNIT

Line coils	
Inductance at 1 V (r.m.s.), 1 kHz	parallel connected 1,85 mH
Resistance at 25 °C	1,85 Ω
Magnetic flux	7,6 mWb ± 5%
Line deflection current, edge to edge, at 25 kV	4,1 A (p-p)
Field coils	
Inductance at 1 V (r.m.s.), 1 kHz	series connected 11 mH
Resistance at 25 °C	6,5 Ω
Field deflection current, edge to edge, at 25 kV	1,7 A (p-p)

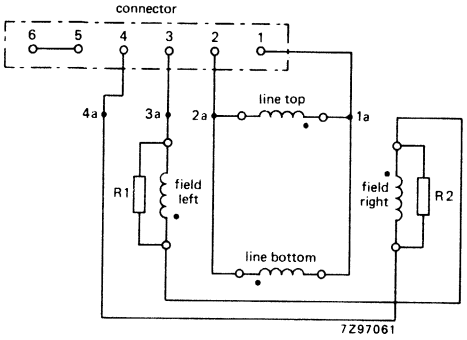

Electrical diagram.
The beginning of the windings is indicated with ●.
R1 = R2 = 100 Ω, 0,25 W.
Matching Stocko connector MKF806-1-0-606.

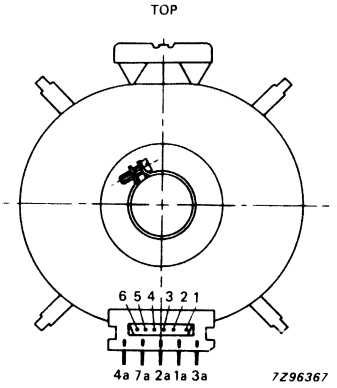

Terminal location.

110° FLAT SQUARE COLOUR PICTURE TUBE ASSEMBLY

- Factory preset tube/coil assembly
- Self-converging and north-south raster correction free
- 59 cm, 110° colour picture tube A59EAK00X
- Double saddle deflection unit AT6010/11

QUICK REFERENCE DATA

Deflection angle	110°
Minimum useful screen diagonal	59 cm
Overall length	39 cm
Neck diameter	29,1 mm

MECHANICAL DATA

Dimensions in mm

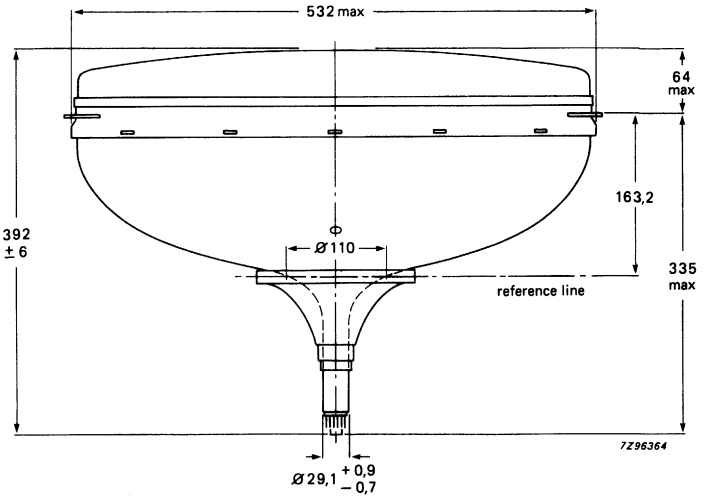

Net mass of tube assembly: 20 kg

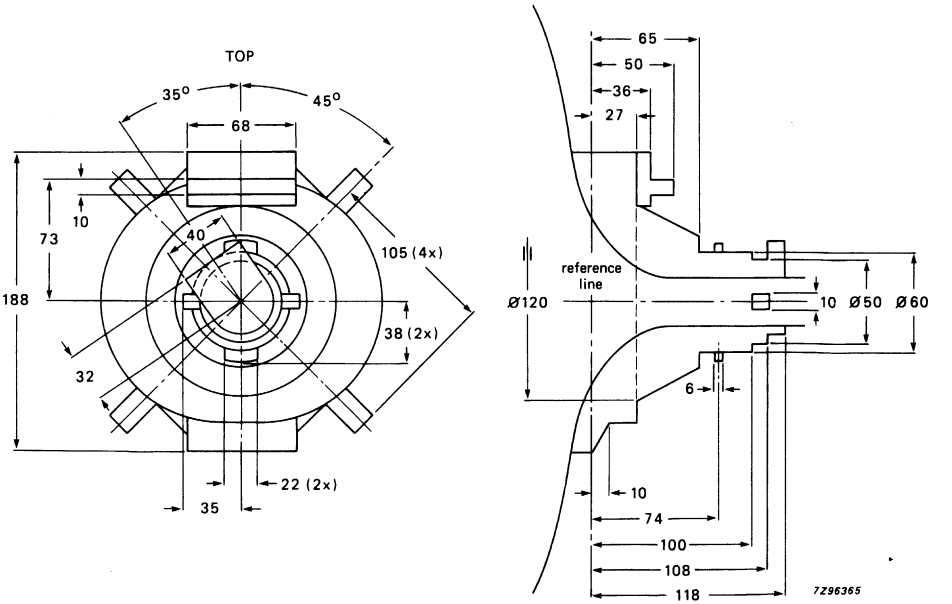

Yoke clearance.

ELECTRICAL DATA OF DEFLECTION UNIT

Line coils	
Inductance at 1 V (r.m.s.), 1 kHz	parallel connected 1,85 mH
Resistance at 25 °C	1,85 Ω
Magnetic flux	7,6 mWb ± 5%
Line deflection current, edge to edge, at 25 kV	4,1 A (p-p)
Field coils	
Inductance at 1 V (r.m.s.), 1 kHz	series connected 11 mH
Resistance at 25 °C	6,5 Ω
Field deflection current, edge to edge, at 25 kV	1,7 A (p-p)

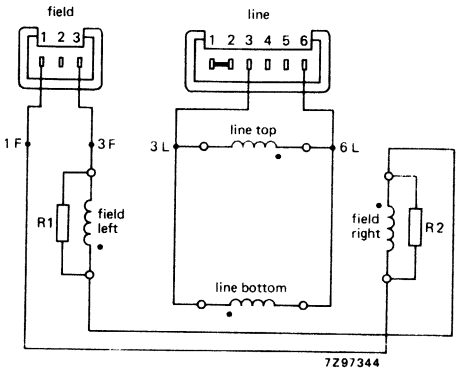

Electrical diagram.
The beginning of the windings is indicated with ●.
R1 = R2 = 100 Ω, 0,25 W.
Matching connectors: 572201340 (field)
572201370 (line).

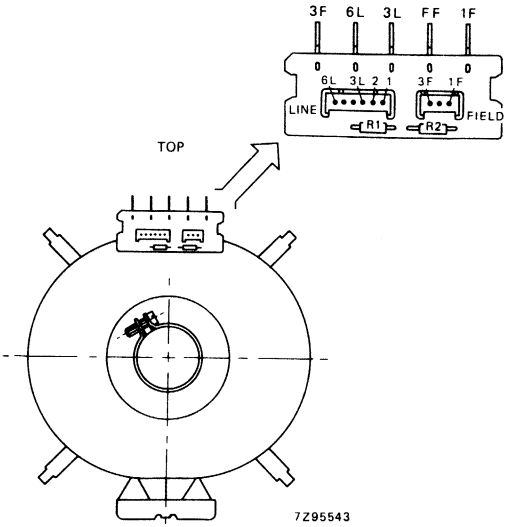

Terminal location.

COLOUR PICTURE TUBE

QUICK REFERENCE DATA

Temperature compensated shadow-mask designed for minimum moiré

High white luminance at unity current ratio

Face diagonal	66 cm
Deflection angle	110°
Neck diameter	36,5 mm
Envelope	reinforced; suitable for push-through
Magnetic shield	internal
Focusing	bi-potential
Deflection	magnetic
Convergence	magnetic
Heating	6,3 V, 730 mA
Light transmission of face glass	52,5 %
Quick heating cathode	with a typical tube a legible picture will appear within approx. 5 s

MECHANICAL DATA

Overall length		425,1 to 438,1 mm
Neck diameter		36,5 mm
Diagonal	of bulb	max. 657,6 mm
Horizontal axis	of bulb	max. 556,4 mm
Vertical axis	of bulb	max. 435,3 mm
Useful screen		
diagonal		min. 617,8 mm
horizontal axis		min. 518 mm
vertical axis		min. 390 mm
Base		12 pin base JEDEC B12-246
Anode contact		Small cavity contact J1-21, IEC 67-III-2

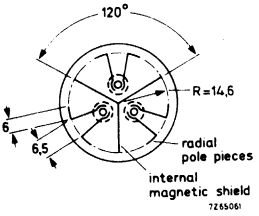

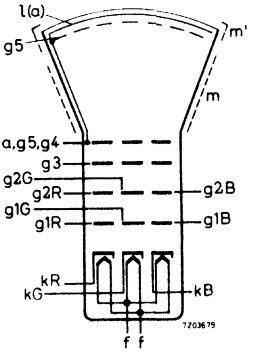

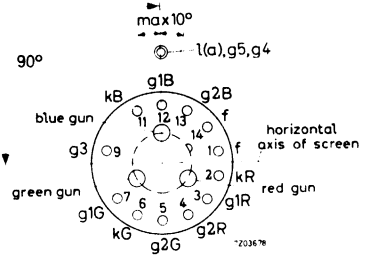

TYPICAL OPERATING CONDITIONS

Final accelerator voltage	$V_{a,g5,g4}$	25 kV
Grid 3 (focusing electrode) voltage	V_{g3}	4,2 to 5 kV
Grid 2 voltage for a spot cut-off at $V_{g1} = -105$ V	V_{g2}	212 to 495 V
Grid 1 voltage for spot cut-off at $V_{g2} = 300$ V	V_{g1}	−70 to −140 V

20AX COLOUR PICTURE TUBE

Replacement type A66-510X.

Replaces A66-500X

20AX Hi-Bri COLOUR PICTURE TUBE

QUICK REFERENCE DATA

Deflection angle	110°
Face diagonal	66 cm
Overall length	41 cm
Neck diameter	36,5 mm
Envelope	reinforced; suitable for push-through
Magnetic shield	internal
Focusing	bi-potential
Deflection	magnetic
Heating	6,3 V, 720 mA
Light transmission of face glass	68%
Quick heating cathode	with a typical tube a legible picture will appear within approx. 5 s

Inherently self-converging system with deflection unit AT1080

MECHANICAL DATA

Overall length	411,6 ± 6,5 mm
Neck diameter	$36{,}5\ ^{+1{,}6}_{-0}$ mm
Bulb dimensions	
diagonal	max. 657,6 mm
width	max. 556,4 mm
height	max. 435,3 mm
Useful screen dimensions	
diagonal	min. 617,8 mm
horizontal axis	min. 518,0 mm
vertical axis	min. 390,0 mm
Base	12-pin base IEC 67-I-47a, type 2
Anode contact	small cavity contact J1-21, IEC 67-III-2

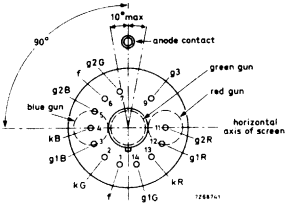

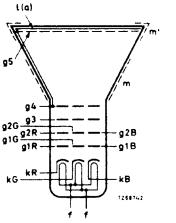

TYPICAL OPERATING CONDITIONS

The voltages are specified with respect to grid 1.

Final accelerator voltage	$V_{a,g5,g4}$	25 kV
Grid 3 (focusing electrode) voltage	V_{g3}	4,0 to 4,8 kV
Grid 2 voltage for a spot-cut-off voltage V_k = 140 V	V_{g2}	465 to 705 V
Cathode voltage for spot cut-off at V_{g2} = 555 V	V_k	110 to 165 V

30AX COLOUR PICTURE TUBE

- Automatic snap-in raster orientation
- Push-on axial purity positioning
- Internal magneto-static beam alignment
- Hi-Bi gun with quadrupole cathode lens
- Self-aligning, self-converging assembly with low power consumption, when combined with deflection unit AT 1870
- North-south pin-cushion distortion-free
- 110° deflection
- Hi-Bri screen
- Pigmented phosphors: enhanced contrast
- Phosphor lines follow glass contour
- In-line gun
- Standard 36,5 mm neck
- Soft-Flash technology
- Slotted shadow mask optimized for minimum moiré
- Fine pitch over entire screen
- Quick-heating cathodes
- Internal magnetic shield
- Anti-crackle coating
- Reinforced envelope for push-through mounting

QUICK REFERENCE DATA

Deflection angle	110°
Face diagonal	66 cm
Overall length	42 cm
Neck diameter	36,5 mm
Heating	6,3 V, 720 mA
Focusing voltage	28% of anode voltage

ELECTRON-OPTICAL DATA

Electron gun system			in-line with separate grids
Focusing method			electrostatic
Focus lens			hi-bi potential
Deflection method			magnetic
Deflection angles			
diagonal			110°
horizontal			97°
vertical			77°

ELECTRICAL DATA

Capacitances			
anode to external conductive coating	$C_{a,\ g5,\ g4/m}$	max.	2000 pF
		min.	1500 pF
anode to metal rimband	$C_{a,\ g5,\ g4/m'}$		300 pF
grid of any gun to all other electrodes	$C_{g\ 1R}$, $C_{g\ 1G}$, $C_{g\ 1B}$		7 pF
cathodes of all guns (connected in parallel) to all other electrodes	C_k		12 pF
cathode of any gun to all other electrodes	C_{kR}, C_{kG}, C_{kB}		4 pF
grid 3 (focusing electrode) to all other electrodes	C_{g3}		7 pF
Resistance between rimband and external conductive coating		min.	50 MΩ
Heating: indirect by a.c. (preferably mains or line frequency) or d.c.			
heater voltage	V_f		6,3 V
heater current	I_f		720 mA

OPTICAL DATA

Screen	metal-backed vertical phosphor stripes; phosphor lines follow glass contour
Screen finish	satinized
Useful screen dimensions	
diagonal	min. 617,8 mm
horizontal axis	min. 518 mm
vertical axis	min. 390 mm
Positional accuracy of the screen with respect to the glass contour	see Figure on the next page
Phosphors	
red	pigmented europium activated rare earth
green	sulphide type
blue	pigmented sulphide type

A = 203,2 mm
B = 274,2 mm
C = 140,2 mm
D = 208,3 mm
E = 30,9 mm

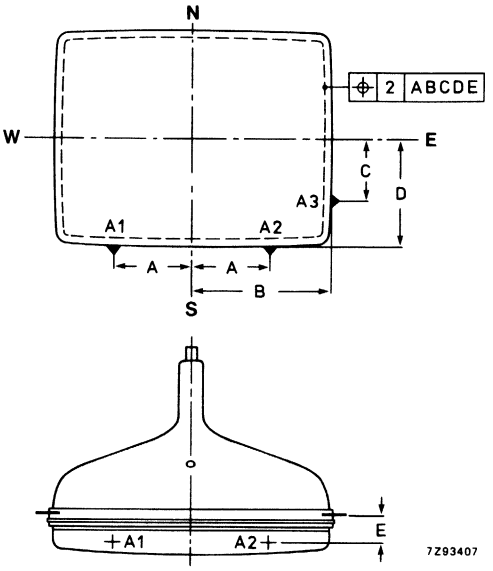

		x	y
Colour co-ordinates			
red		0,635	0,340
green		0,315	0,600
blue		0,150	0,060
Centre-to-centre distance of identical colour phosphor stripes		approx. 0,8 mm	
Light transmission of face glass		69%	
Luminance at the centre of the screen	L	170 cd/m² *	

MECHANICAL DATA (see also the figures on the following pages)

Overall length	421,6 ± 6 mm
Neck diameter	$36{,}5\ ^{+\ 1{,}3}_{-\ 0}$ mm
Base	12-pin base IEC 67-I-47a, type 2
Anode contact	cavity cap JEDEC J1-21, IEC 67-III-2
Mounting position	anode contact on top
Rimband	provided with 18 slots to accommodate clips for mounting of degaussing coils
Net mass	approx. 20 kg

Handling

During shipment and handling the tube should not be subjected to accelerations greater than 350 m/s² in any direction.

* Tube settings adjusted to produce white D (x = 0,313, y = 0,329), focused raster, current density 0,4 μA/cm².

MECHANICAL DATA (continued)

Dimensions in mm

Notes are given after the drawings.

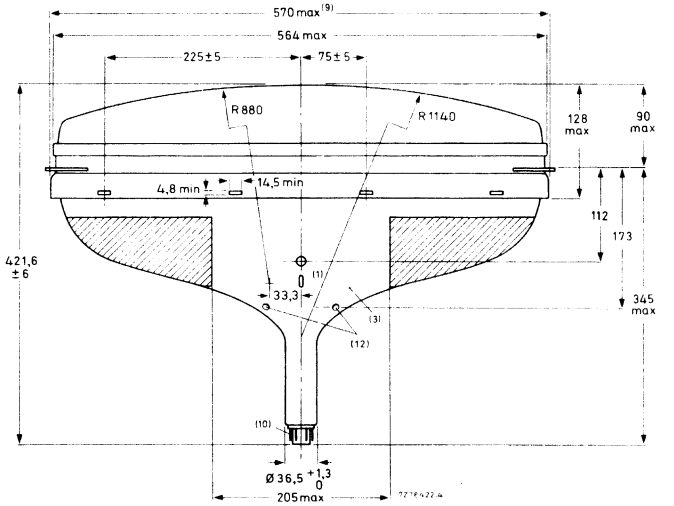

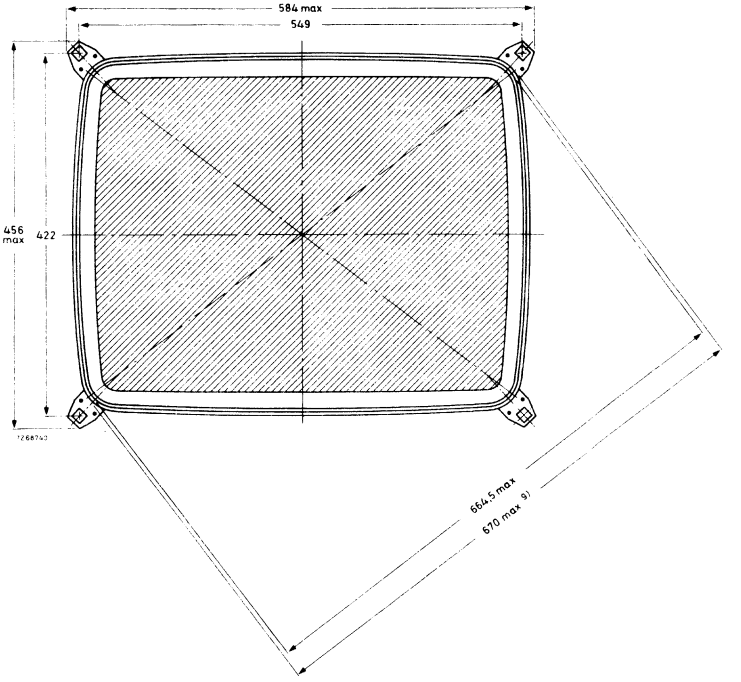

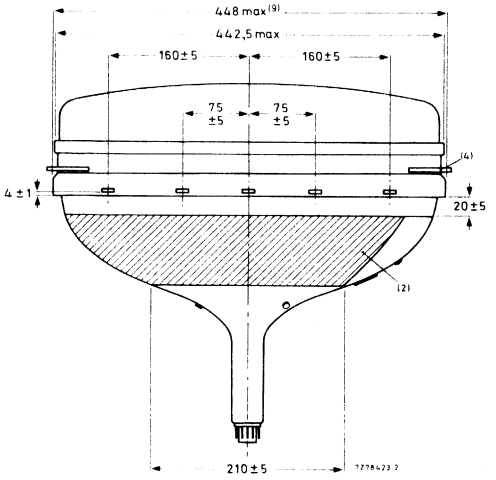

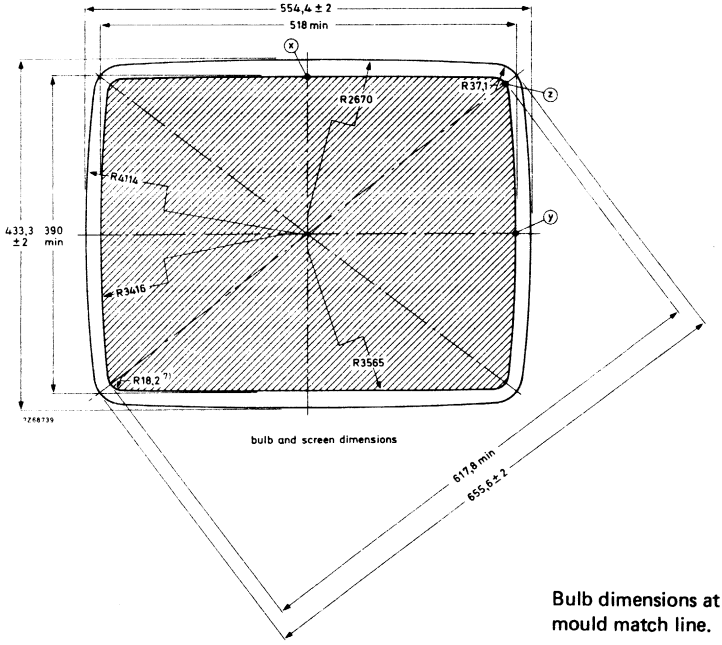

Bulb dimensions at mould match line.

MECHANICAL DATA (continued)

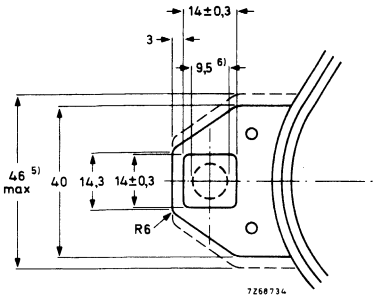

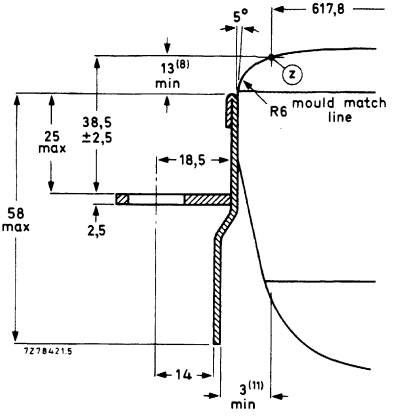

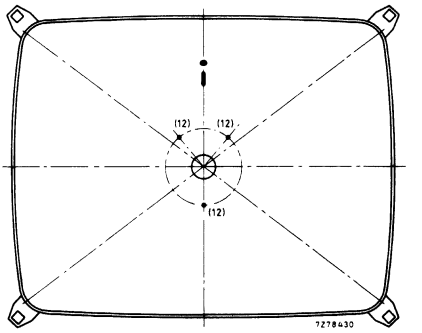

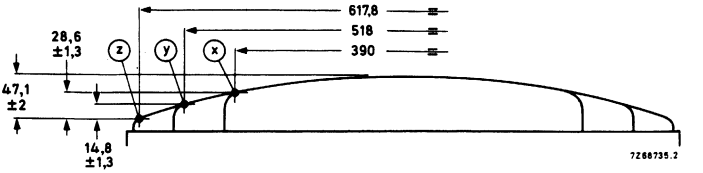

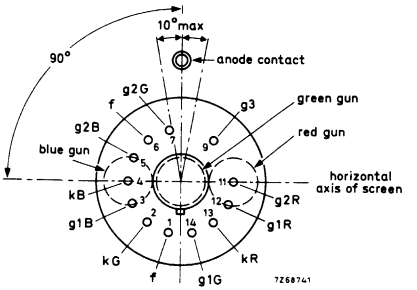

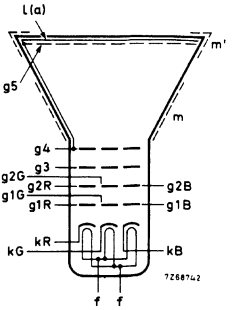

Notes to outline drawings on the preceding pages

1. This ridge can be used as an orientation for the deflection unit.
2. Configuration of outer conductive coating may be different, but will contain the contact area as shown in the drawing.
3. To clean this area, wipe only with a soft lintless cloth.
4. The displacement of any lug with respect to the plane through the three other lugs is max. 2 mm.
5. Minimum space to be reserved for mounting lug.
6. The position of the mounting screw in the cabinet must be within a circle of 9,5 mm diameter drawn around the true geometrical positions, i.e. the corners of a rectangle of 549 mm x 422 mm.
7. Co-ordinates for radius R = 18,2 mm: x = 236,6 mm, y = 168,9 mm.
8. Distance from point z to any hardware.
9. Maximum dimensions in plane of lugs.
10. The socket for this base should not be rigidly mounted; it should have flexible leads and be allowed to move freely. Bottom circumference of the base will fall within a circle concentric with the tube axis and having a diameter of 55 mm.
    The mass of the mating socket with circuitry should not be more than 150 g; maximum permissible torque is 40 mNm.
11. Minimum distance between glass and rimband in plane of the apertures.
12. Centring bosses for deflection unit.

Sagittal heights with reference to screen centre at the edge of the minimum useful screen

coordinates		sagittal
x	y	height
mm	mm	mm
0*	195,0	18,7
20	194,9	18,9
40	194,8	19,4
60	194,5	20,3
80	194,1	21,6
100	193,6	23,3
120	193,0	25,3
140	192,2	27,7
160	191,4	30,5
180	190,5	33,6
200	189,4	27,2
220	188,2	41,2
230	187,6	43,4
251,4**	179,5	47,1
255,3	160	44,7
256,1	140	41,8
256,9	120	39,3
257,5	100	37,3
258,1	80	35,6
258,6	60	34,2
258,8	40	33,3
258,9	20	32,7
259,0▲	0	32,5

* Point (x). ** Diagonal. ▲ Point (y).

12-pin base, IEC 67-I-47a, type 2

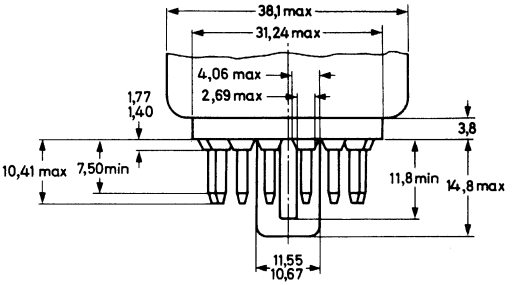

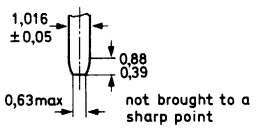

pin contour

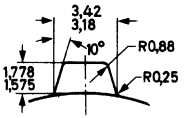

detail of key

Cavity cap JEDEC J1-21, IEC 67-III-2

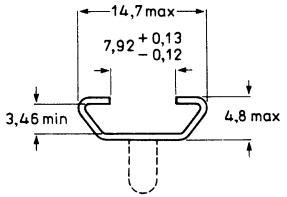

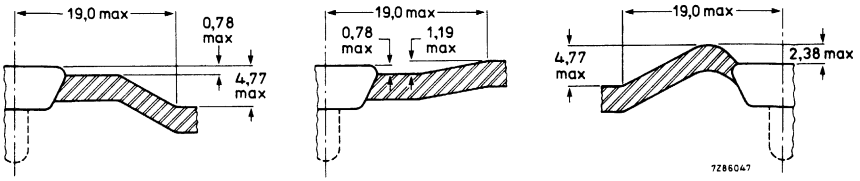

Maximum cone contour

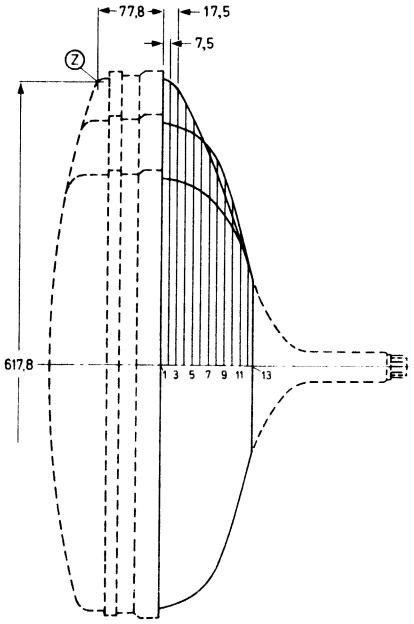

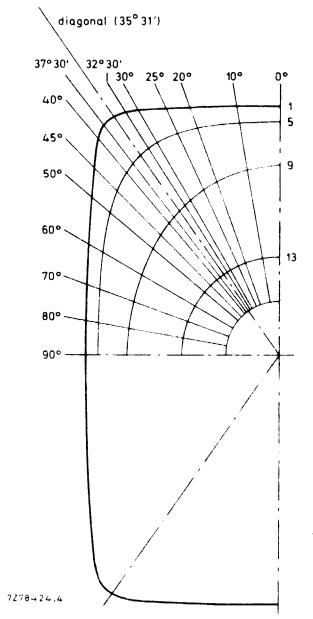

section	distance from centre (max. values)															
	nominal distance from section 1	0°	10°	20°	25°	30°	32° 30'	diag.	37° 30'	40°	45°	50°	60°	70°	80°	90°
1	0	279,0	283,0	295,4	305,2	318,0	325,4	329,0	327,5	320,7	296,5	276,7	248,3	230,7	221,1	218,0
2	7,5	276,4	280,3	292,5	302,0	313,8	320,4	323,1	321,3	314,8	292,5	273,5	245,6	228,1	218,5	215,5
3	17,5	273,4	277,1	288,2	296,2	304,8	308,7	309,2	307,0	301,9	285,1	268,8	242,5	225,3	215,8	212,8
4	27,5	268,8	272,1	281,5	287,4	292,7	294,3	293,4	291,3	287,1	274,6	261,1	237,5	221,3	212,1	209,1
5	37,5	262,3	265,1	272,0	275,7	277,9	278,0	276,4	274,4	270,9	261,4	250,5	230,4	215,7	207,2	204,3
6	47,5	254,0	255,9	260,0	261,4	261,2	260,2	258,1	256,2	253,2	245,8	237,4	221,1	208,5	201,0	198,4
7	57,5	243,5	244,5	245,3	244,6	242,7	241,2	238,8	237,0	234,4	228,5	222,1	209,6	199,7	193,4	191,3
8	67,5	230,1	229,8	227,8	225,7	222,8	221,0	218,6	217,0	214,8	210,1	205,3	196,2	188,9	184,3	184,6
9	77,5	213,3	211,9	207,8	204,9	201,7	199,9	197,7	196,3	194,5	190,9	187,4	181,2	176,4	173,4	172,4
10	87,5	194,0	191,4	185,6	182,3	178,9	177,3	175,4	174,2	172,8	170,1	167,8	164,3	162,1	161,1	161,0
11	97,5	172,8	168,1	161,4	158,0	154,9	153,5	152,0	151,1	150,0	148,2	146,9	145,7	146,0	147,3	148,2
12	107,5	142,1	139,1	133,9	131,5	129,4	128,4	127,5	126,9	126,3	125,4	124,9	125,2	126,9	129,5	131,1
13	117,5	110,0	110,0	110,0	110,0	110,0	110,0	110,0	110,0	110,0	110,0	110,0	110,0	110,0	110,0	110,0

RECOMMENDED OPERATING CONDITIONS (cathode drive)

The voltages are specified with respect to grid 1.

Anode voltage	$V_{a, g5, g4}$	25 kV
Grid 3 (focusing electrode) voltage	V_{g3}	6,5 to 7,45 kV

A. Operation at equal spot cut-off voltage V_k = 140 V

Grid 2 voltage (V_{g2}) adjusted for each gun separately; V_{g2} range 590 to 800 V.

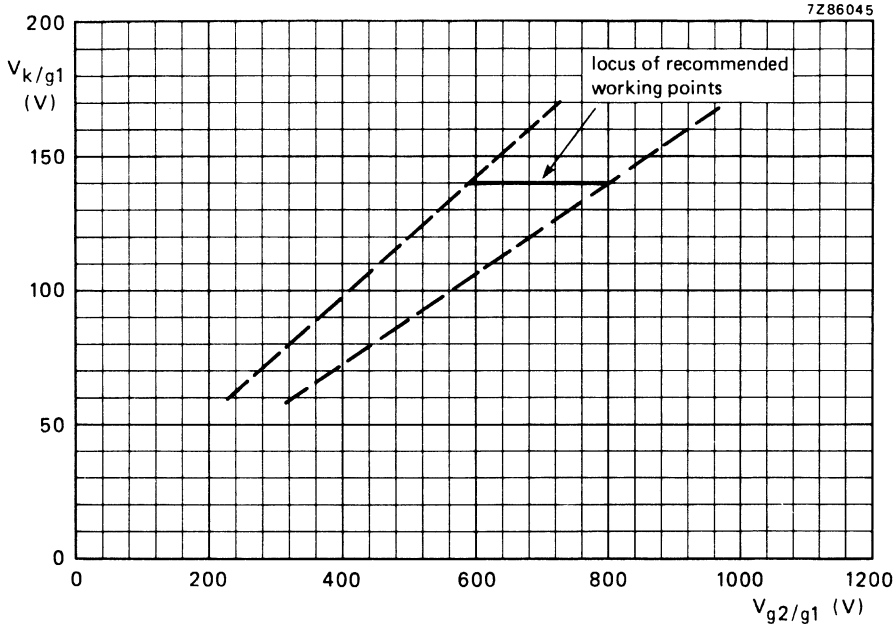

Spot cut-off design chart.

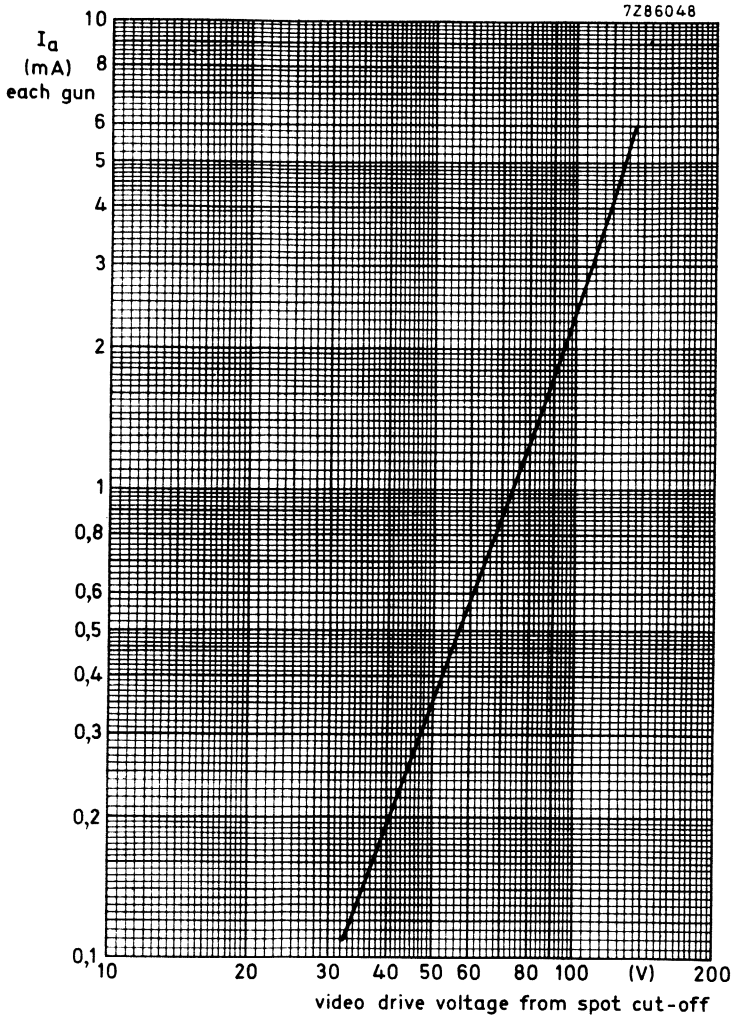

Typical cathode drive characteristic.

V_f = 6,3 V;

$V_{a,\ g5,\ g4}$ = 25 kV;

V_{g3} adjusted for focus;

V_{g2} (each gun) adjusted to provide spot cut-off for V_k = 140 V.

B. Operation at equal grid 2 voltage

Grid 2 voltage (V_{g2}) adjusted for highest gun spot cut-off voltage V_k = 150 V.

Remaining guns adjusted for spot cut-off by means of cathode voltage.

V_{g2} range 630 to 860 V.

V_k range 120 to 150 V.

Adjustment procedure:

Set the cathode voltage (V_k) for each gun at 150 V; increase the grid 2 voltage (V_{g2}) from approx. 600 V to the value at which one of the colours becomes just visible. Now decrease the cathode voltage of the remaining guns so that the other colours also become visible.

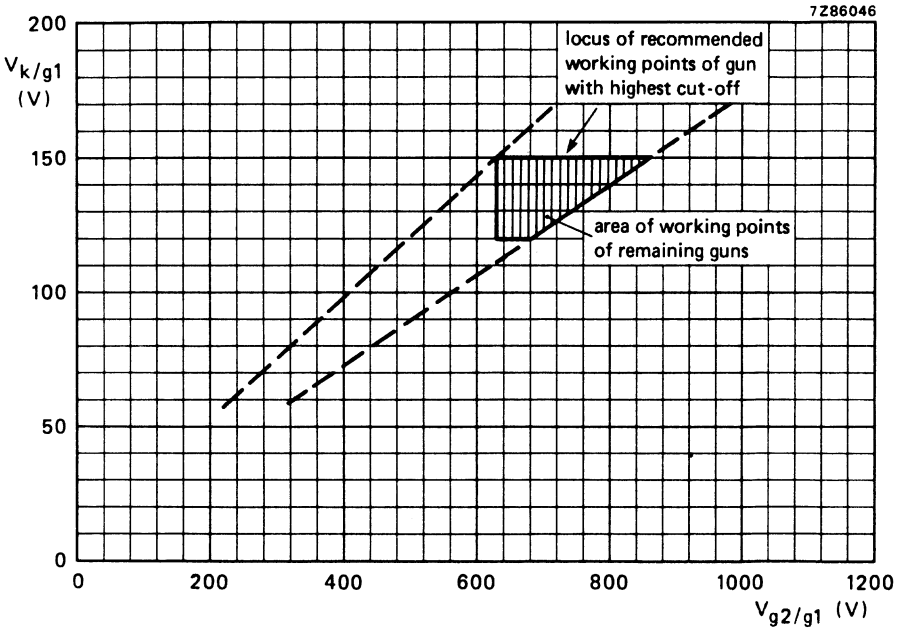

Spot cut-off design chart.

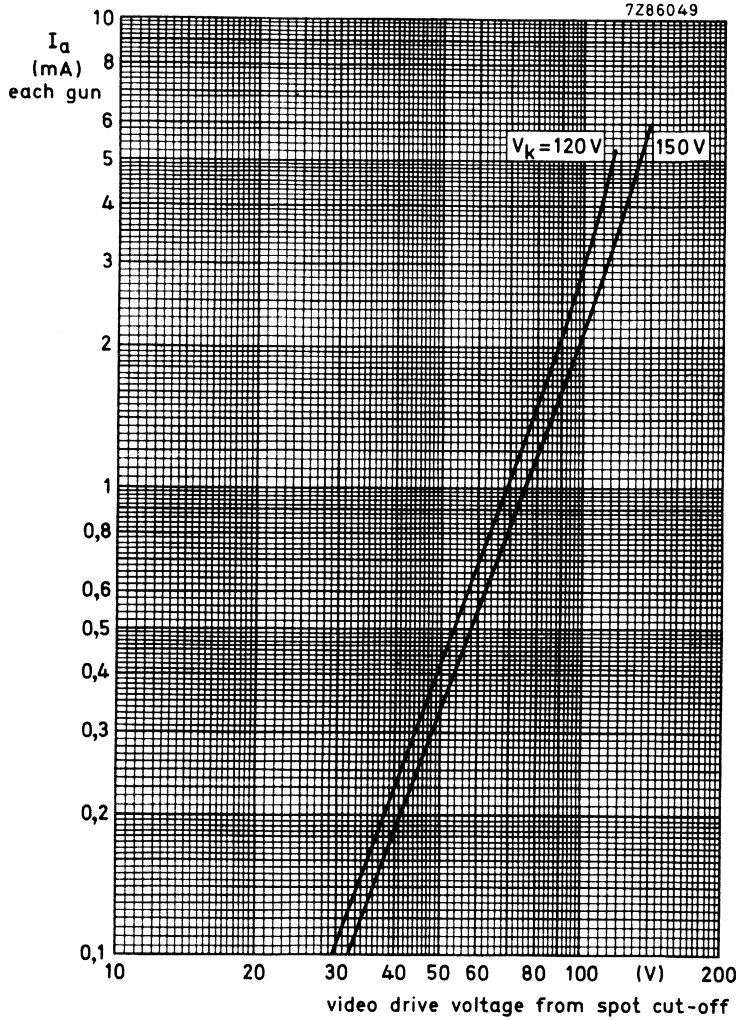

Typical cathode drive characteristic.

V_f = 6,3 V;

$V_{a, g5, g4}$ = 25 kV;

V_{g3} adjusted for focus;

V_{g2} (each gun) adjusted to provide spot cut-off for V_k =120 V and 150 V.

EQUIPMENT DESIGN VALUES (each gun if applicable)

The values are valid for anode voltages between 22,5 and 27,5 kV.

The voltages are specified with respect to grid 1.

Grid 3 (focusing electrode) voltage	V_{g3}	26 to 29,8% of anode voltage
Difference in cut-off voltage between guns in one tube	ΔV_k	lowest value is min. 80% of highest value
Heater voltage	V_f	6,3 V at zero beam current
Grid 3 (focusing electrode) current	I_{g3}	−5 to + 5 μA
Grid 2 current	I_{g2}	−5 to + 5 μA
Grid 1 current at V_k = 140 V	I_{g1}	−5 to + 5 μA

To produce white D, CIE co-ordinates x = 0,313, y = 0,329.

Percentage of the total anode current supplied by each gun (typ.)

red gun	38,3%
green gun	35,8%
blue gun	25,9%

Ratio of anode current

	min.	av.	max.
red gun to green gun	0,7	1,1	1,4
red gun to blue gun	1,1	1,5	2,0
blue gun to green gun	0,5	0,7	1,0

BEAM CENTRING

Maximum centring error in any direction 5 mm

LIMITING VALUES (each gun if applicable)

Design maximum rating system unless otherwise stated.

The voltages are specified with respect to grid 1.

Anode voltage	$V_{a, g5, g4}$	max. min.	27,5 kV 22,5 kV		notes 1, 2, 3 note 4
Long-term average current for three guns	I_a	max.	1000	μA	note 5
Grid 3 (focusing electrode) voltage	V_{g3}	max.	9	kV	
Grid 2 voltage	V_{g2}	max.	1200	V	note 6
Cathode voltage					
positive	V_k	max.	400	V	
positive operating cut-off	V_k	max.	200	V	
negative	$-V_k$	max.	0	V	
negative peal	$-V_{kp}$	max.	2	V	
Cathode to heater voltage					
positive	V_{kf}	max.	250	V	
positive peak	V_{kfp}	max.	300	V	note 1
negative	$-V_{kf}$	max.	135	V	
negative peak	$-V_{kfp}$	max.	180	V	note 1
Heater voltage	V_f	6,3 V	$^{+5}_{-10}$	%	notes 1, 7

Notes

1. Absolute maximum rating system.
2. The X-ray dose rate remains below the acceptable value of 36 pA/kg (0,5 mR/h), measured with ionization chamber when the tube is used within its limiting values.
3. During adjustment on the production line this value is likely to be surpassed considerably. It is therefore strongly recommended to first make the necessary adjustments for normal operation without picture tube.
4. Operation of the tube at lower voltages impairs the luminance and resolution, and could impair convergence.
5. The short-term average anode current should be limited by circuitry to 1500 μA.
6. During adjustment on the production line max. 1500 V is permitted.
7. For maximum cathode life and optimum performance it is recommended that the heater supply be designed for 6,3 V at zero beam current.

FLASHOVER PROTECTION

High electric field strengths are present between the gun electrodes of picture tubes. Voltages between gun electrodes may reach values of 20 kV over approx. 1 mm. As a result of the Soft-Flash technology these flashover currents are limited to approx. 60 A offering higher set reliability, optimum circuit protection and component savings.

Primary protective circuitry using properly grounded spark gaps and series isolation resistors (preferably carbon composition) is still necessary to prevent tube damage and damage to the circuitry which is directly connected to the tube socket. The spark gaps should be connected to all picture tube electrodes at the socket according to the figure below; they are not required on the heater pins. No other connections between the outer conductive coating and the chassis are permissible. The spark gaps should be designed for a breakdown voltage at the focusing electrode (g3) of 10,5 kV, and at the other electrodes of 1,5 to 2 kV. The values of the series isolation resistors should be as high as possible (min 1,5 kΩ) without causing deterioration of the circuit performance. The resistors should be able to withstand an instantaneous surge of 20 kV for the focusing circuit and 12 kV for the remaining circuits without arcing.

Additional information is available on request.

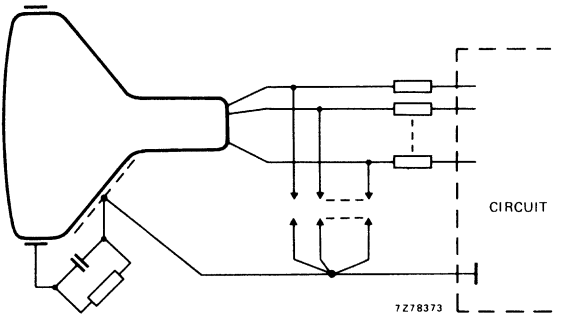

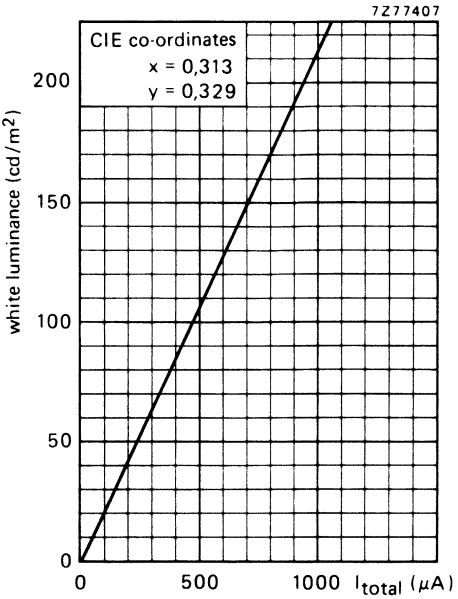

Luminance at the centre of the screen as a function of I_{total}. Scanned area 518 mm x 390 mm.

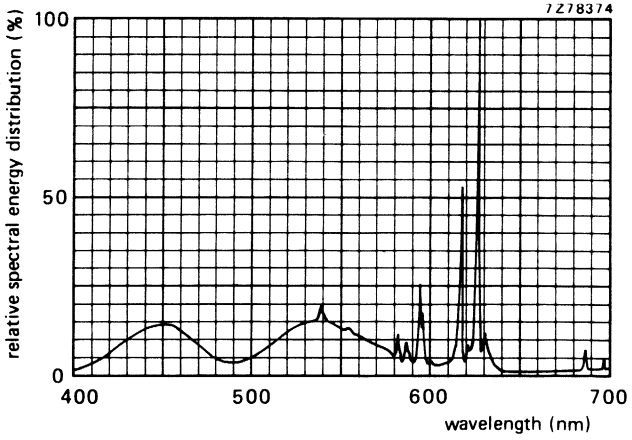

Simultaneous excitation of red, green and blue phosphor, measured in a tube, to produce white of x = 0,313, y = 0,329. Exact shape of the peaks depends on the resolution of the measuring apparatus.

Colour co-ordinates:	x	y
red	0,635	0,340
green	0,315	0,600
blue	0,150	0,060

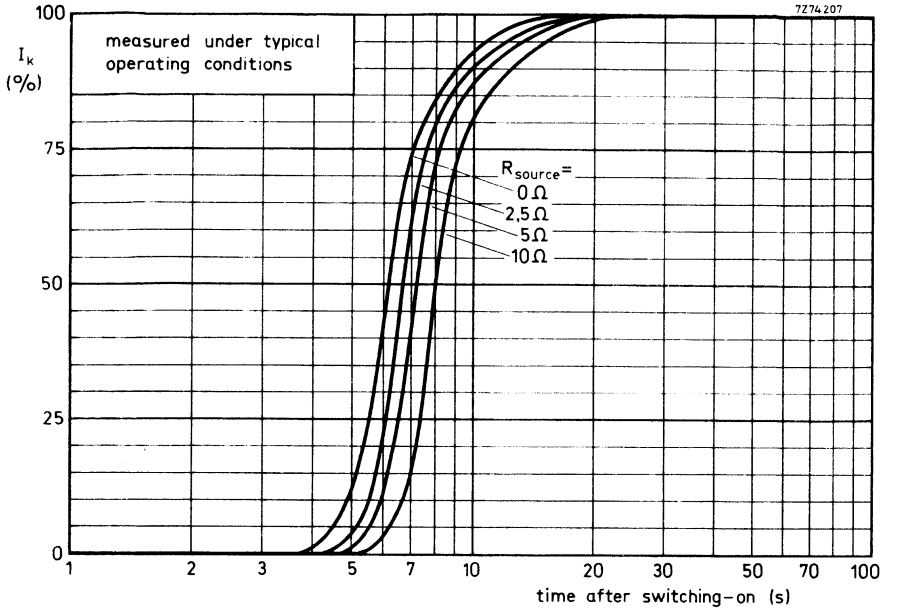

Cathode heating time to attain a certain percentage of the cathode current at equilibrium conditions.

DEGAUSSING

The picture tube is provided with an internal magnetic shield. This shield and the shadow mask with its suspension system may be provided with an automatic degaussing system, consisting of two coils covering top and bottom cone parts.

For proper degaussing an intial magnetomotive force (m.m.f.) of 300 ampere-turns is required in each of the coils. This m.m.f. has to be gradually decreased by appropriate circuitry. To prevent beam landing disturbances by line-frequency currents induced in the degaussing coils, these coils should be shunted by a capacitor of sufficiently high value. In the steady state, no significant m.m.f. should remain in the coils ($\leqslant$ 0,3 ampere-turns).

If single-phase power rectification is employed in the TV circuitry, provision should be included to prevent asymmetric distortion of the a.c. voltage applied to the degaussing circuit due to high d.c. inrush currents.

To ease the mounting of the coils, the rimband is provided with rectangular holes. An example is given below.

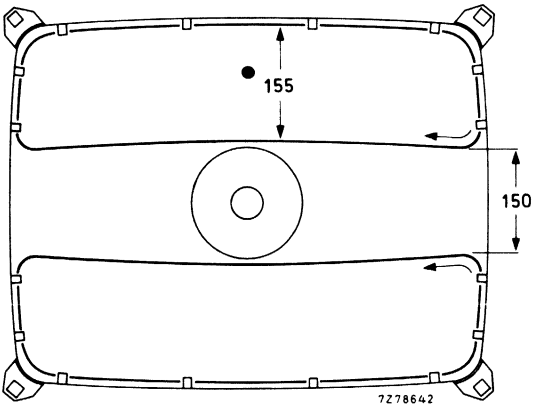

Position of degaussing coils on the picture tube.

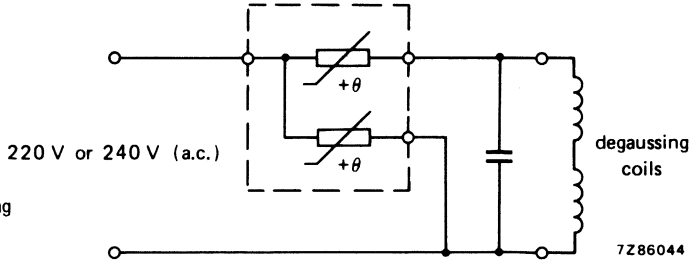

Degaussing circuit using dual PTC thermistor 2322 662 98009.

Data of each degaussing coil

Circumference	135 cm
Number of turns	60
Copper-wire diameter	0,4 mm
Aluminium-wire diameter	0,5 mm
Resistance	11 Ω

Replaced by AT1870

DEFLECTION UNIT

QUICK REFERENCE DATA

Picture tube	A66-540X
gun arrangement	in line
diagonal	66 cm (26 in)
neck diameter	36,5 mm
Deflection angle	110°
Line deflection current, edge to edge at 25 kV	5,1 A(p-p)
Inductance of line coils	1,5 mH
Field deflection current, edge to edge at 25 kV	2,0 A(p-p)
Resistance of field coils (potentiometer R1 included)	5,85 Ω

CONNECTIONS

(See also Fig. 2).

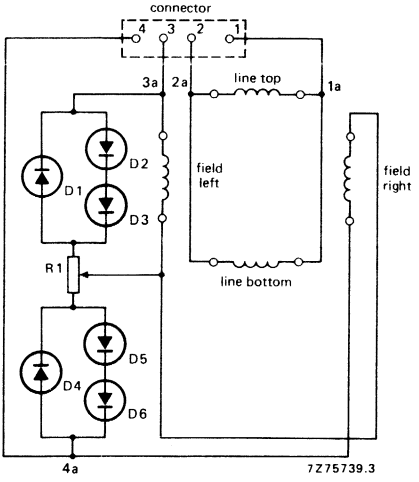

Fig. 1.

Notes:

- Contacts 1 and 1a must be connected to the live side of the line circuitry, contacts 3 and 3a must be connected to the live side of the field circuitry.
- Matching female Stocko connector: MKF 804-1-0-404.
- D1 to D6 = BAS11, BAX18, BAX18A, BAV10 or BAW62.
- R1 = 180 Ω.

MECHANICAL DATA

Outlines

Dimensions in mm

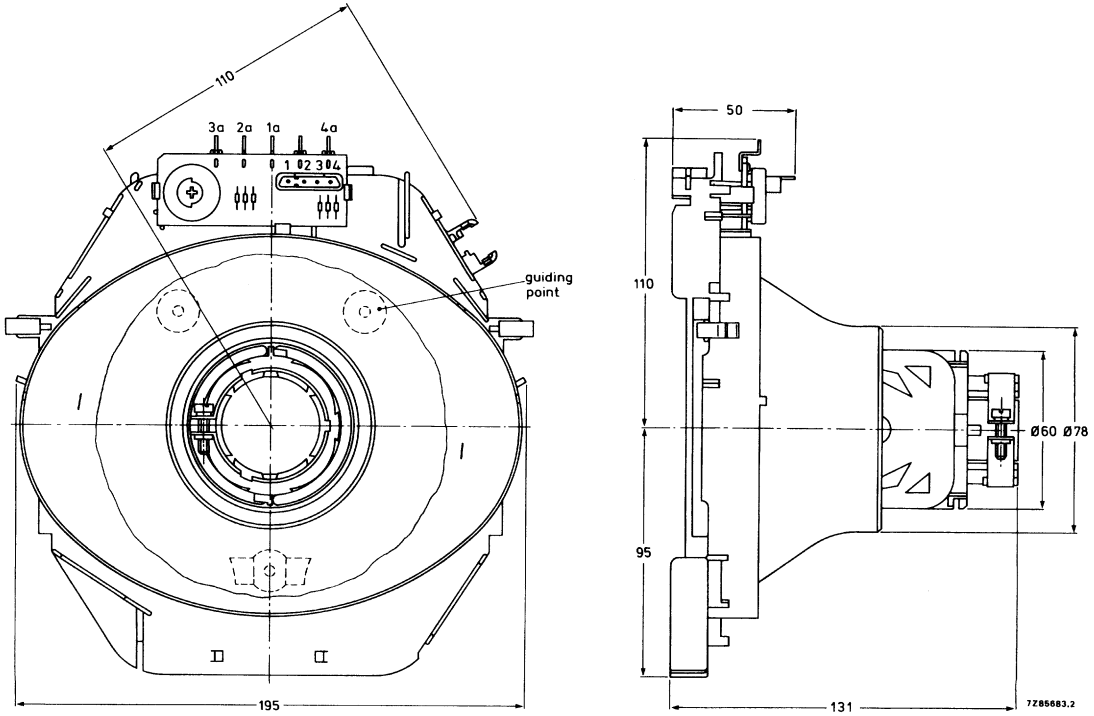

Fig. 2 Maximum dimensions.

DEFLECTION UNIT

QUICK REFERENCE DATA

Picture tube	A66-540X
gun arrangement	in line
diagonal	66 cm (26 in)
neck diameter	36,5 mm
Deflection angle	110°
Line deflection current, edge to edge at 25 kV	5,1 A(p-p)
Inductance of line coils	1,5 mH
Field deflection current, edge to edge at 25 kV	2,0 A(p-p)
Resistance of field coils (potentiometer R1 included)	5,85 Ω

APPLICATION

This deflection unit is for use with 110° in-line colour picture tube A66-540X, in conjunction with e.g.: diode-split line output transformer AT2076/70A and linearity control unit AT4042/42 or AT4042/30.

DESCRIPTION

The deflection unit consists of flangeless line and field deflection coils, a one piece ferrite ring and a one piece coil carrier.

Connection to the deflection coils can be made via a connector (contact pins 1 to 4) or solder tags 1a to 4a, see Fig. 1.

MECHANICAL DATA

Outlines

Dimensions in mm

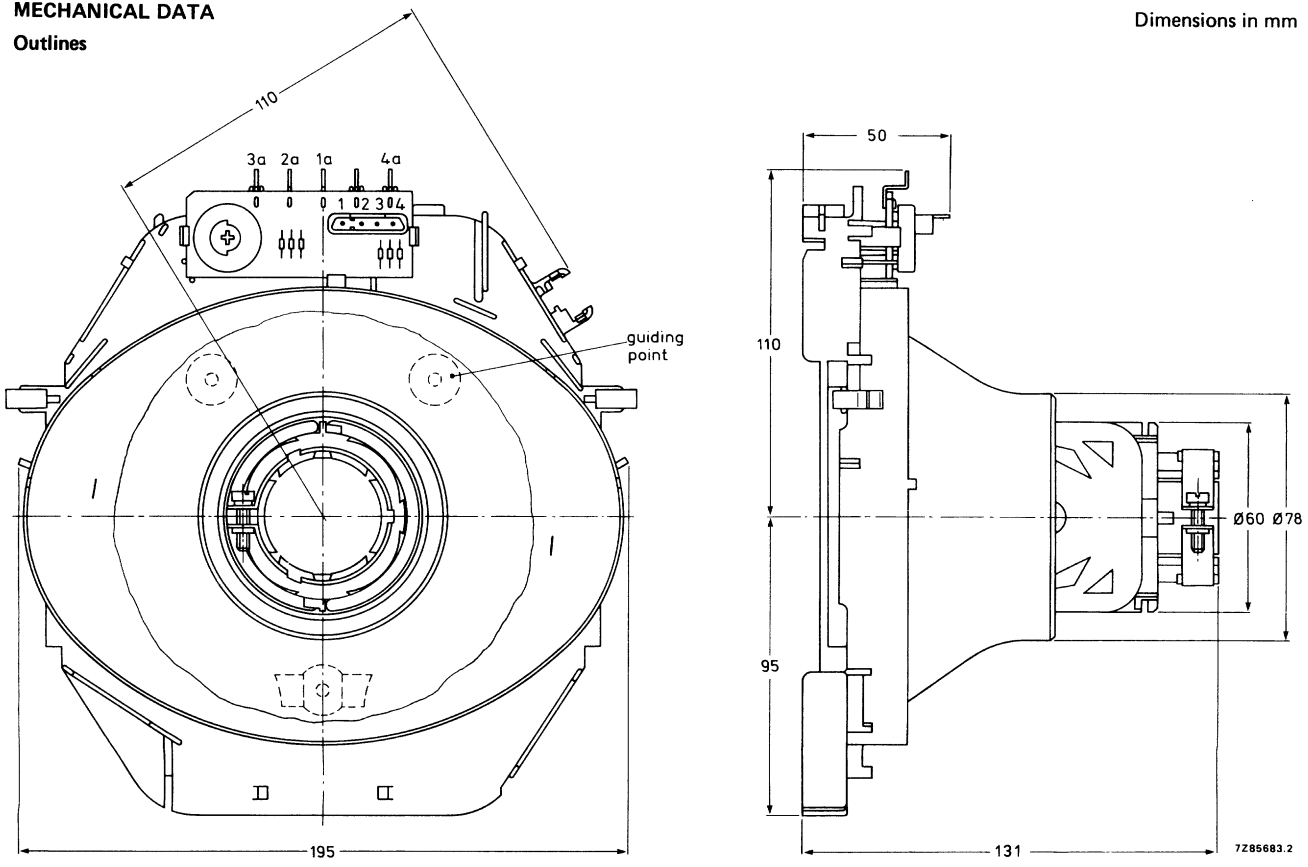

Fig. 1 Maximum dimensions.

The deflection unit fits a tube with a neck diameter of $36{,}5\ ^{+\ 1{,}3}_{-0}$ mm.

Maximum operating temperature (average copper temperature measured with resistance method)	+ 90 °C
Storage temperature range	−20 to + 90 °C
Flame retardent	according to UL1413, category 94, V-1

Mounting

The deflection unit can simply be pushed on the neck of a picture tube.

Both on the neck of the tube and on the deflection unit, there are 3 reference surfaces to establish angular and axial positioning.

Once the unit is mounted the combination is perfectly aligned and requires no further adjustment for static convergence, colour purity and raster orientation.

The unit must be pressed against the reference surfaces on the cone of the picture tube with a force of 20 ± 5 N and fixed by tightening the screw in the clamping ring at the rear with a torque of $1{,}0\ ^{+\ 0{,}4}_{-0{,}2}$ Nm.

Maximum axial force exerted on the screw is 20 N.

ENVIRONMENTAL TEST SPECIFICATIONS

Vibration	IEC68-2-6 (test Fc)
Shock	IEC68-2-27 (test Ea; 35g)
Bump	IEC68-2-29 (test Eb; 25g)
Cold	IEC68-2-1 (test Ab)
Dry heat	IEC68-2-2 (test Bb)
Damp heat, steady state	IEC68-2-3 (test Ca)
Cyclic damp heat	IEC68-2-30 (test Db)
Change of temperature	IEC68-2-14 (test Nb)

ELECTRICAL DATA

Line coils	
Inductance at 1 V (r.m.s.), 1 kHz	1,5 mH ± 4%
Resistance at 25 °C	1,3 Ω ± 10%
Magnetic flux	7,6 mWb ± 5%
Line deflection current, edge to edge, at 25 kV	5,1 A(p-p)
Field coils	
Inductance at 1 V (r.m.s.), 1 kHz	9,7 mH ± 10%
Resistance at 25 °C (potentiometer R1 included)	5,85 Ω ± 7%
Field deflection current, edge to edge, at 25 kV	2,0 A(p-p)
Cross-talk	a voltage of 1 V, 15 kHz applied to the line coils causes no more than 20 mV across the field coils
Insulation resistance	
between line and field coils; at 3 kV (d.c.)	> 10 MΩ
between field coils and ferrite ring, at 300 V (d.c.)	> 10 MΩ

Connections

(See also Fig. 1).

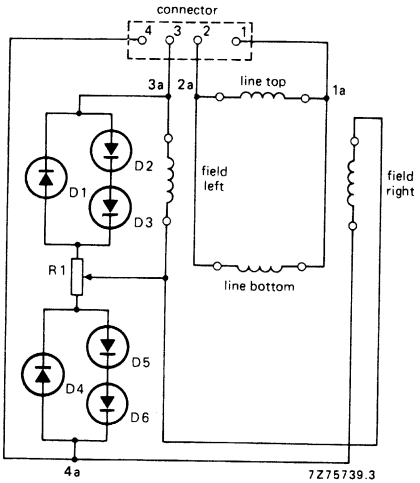

Fig. 2.

Notes:

- Contacts 1 and 1a must be connected to the live side of the line circuitry, contacts 3 and 3a must be connected to the live side of the field circuitry.
- Matching female Stocko connector: MKF 804-1-0-404.
- D1 to D6 = BAS11, BAX18, BAX18A, BAV10 or BAW62.
- R1 = 180 Ω.

FLAT SQUARE Hi-Bri COLOUR PICTURE TUBE

- Flat and square screen
- 110° deflection
- In-line, hi-bi potential A R T* gun with quadrupole cathode lens
- 29,1 mm neck diameter
- Mask with corner suspension
- Hi-Bri technology
- Pigmented phosphors
- Quick-heating low-power cathodes
- Soft flash
- Slotted shadow mask optimized for minimum moiré at 625 lines systems
- Internal magnetic shield
- Internal multipole
- Reinforced envelope for push-through mounting
- Anti-crackle coating

QUICK REFERENCE DATA

Deflection angle	110°
Minimum useful screen diagonal	66 cm
Overall length	42 cm
Neck diameter	29,1 mm
Heating	6,3 V, 310 mA
Focusing voltage	31% of anode voltage

* Aberration Reducing Triode.

ELECTRON-OPTICAL DATA

Electron gun system	unitized triple-aperture electrodes; aberration reducing triode
Focusing method	electrostatic
Focus lens	hi-bi-potential
Deflection method	magnetic
Deflection angles	
diagonal	110°
horizontal	97°
vertical	77°

ELECTRICAL DATA

Capacitances			
anode to external conductive coating	$C_{a,\ g5,\ g4/m}$	max.	2200 pF
		min.	1800 pF
anode to metal rimband	$C_{a,\ g5,\ g4/m'}$		300 pF
cathodes of all guns (connected in parallel) to all other electrodes	C_k		15 pF
cathode of any gun to all other electrodes	C_{kR}, C_{kG}, C_{kB}		5 pF
grid 3 (focusing electrode) to all other electrodes	C_{g3}		6 pF
grid 1 to all other electrodes	C_{g1}		17 pF
grid 2 to all other electrodes	C_{g2}		4,5 pF
Resistance between rimband and external conductive coating		min.	50 MΩ
Heating: indirect by a.c. (preferably mains or line frequency) or d.c.			
heater voltage	V_f		6,3 V
heater current	I_f		310 mA

OPTICAL DATA

Screen	metal-backed vertical phosphor stripes; phosphor lines follow glass contour
Screen finish	satinized
Useful screen dimensions	
diagonal	min. 660 mm
horizontal axis	min. 534,5 mm
vertical axis	min. 406 mm
area	min. 2152 cm²
Positional accuracy of the screen with respect to the glass contour	see Figure on the next page
Phosphors	
red	pigmented europium activated rare earth
green	sulphide type
blue	pigmented sulphide type
Persistence	medium short

A = 203,2 mm
B = 287,0 mm
C = 140,2 mm
D = 222,6 mm
E = 25,6 mm

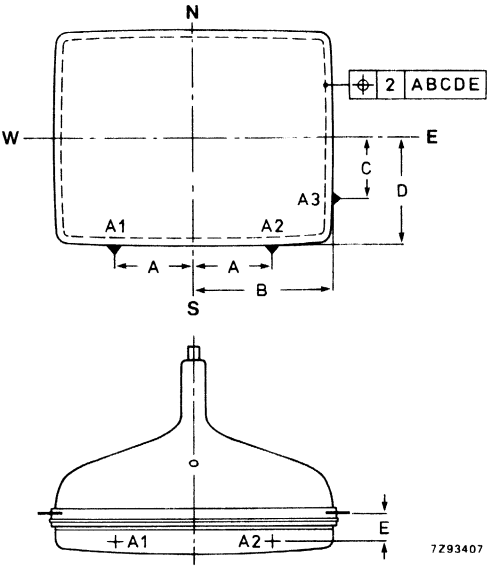

		x	y
Colour co-ordinates			
red		0,635	0,340
green		0,315	0,600
blue		0,150	0,060
Centre-to-centre distance of identical colour phosphor stripes		approx. 0,8 mm	
Light transmission of face glass at screen centre		65%	
Luminance at the centre of the screen	L	160 cd/m² *	

MECHANICAL DATA (see also the figures on the following pages)

Overall length	422 ± 6 mm
Neck diameter	$29{,}1^{+1{,}4}_{-0{,}7}$ mm
Base	JEDEC B10-277
Anode contact	small cavity contact J1-21, IEC 67-III-2
Mounting position	anode contact on top
Implosion protection	rimband provided with skirt and slots to accommodate clips for mounting of degaussing coils
Net mass	approx. 24,5 kg

Handling

During shipment and handling the tube should not be subjected to accelerations greater than 35g in any direction.

* Tube settings adjusted to produce white D (x = 0,313, y = 0,329), focused raster, current density 0,4 μA/cm².

MECHANICAL DATA (continued)

Dimensions in mm

Notes are given after the drawings.

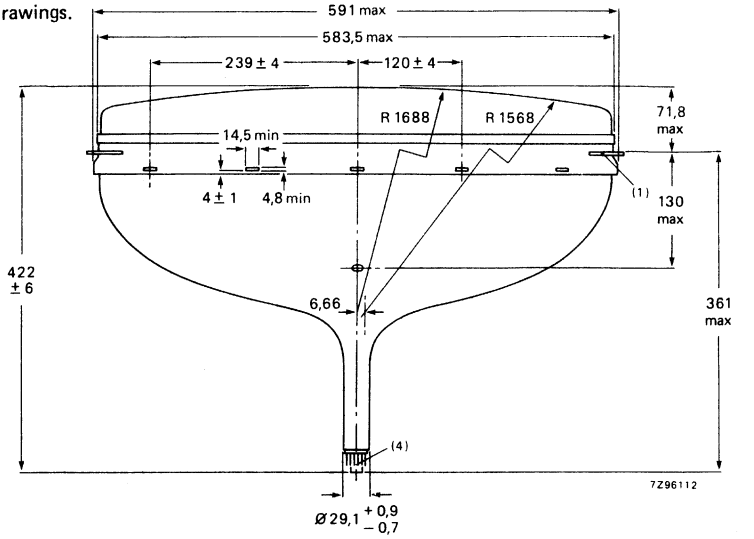

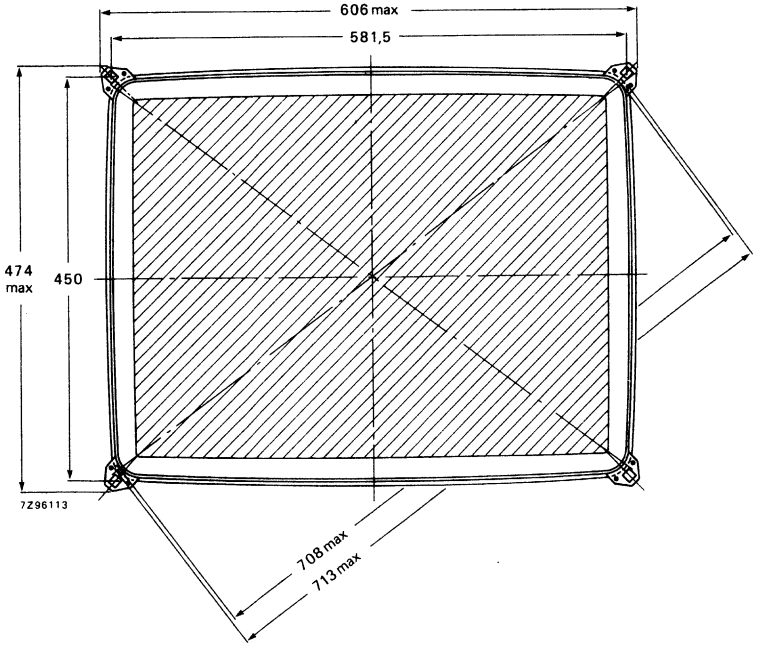

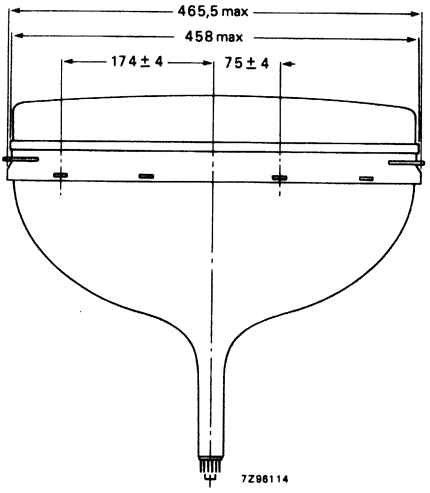
465,5 max
458 max
174 ± 4
75 ± 4
7Z96114

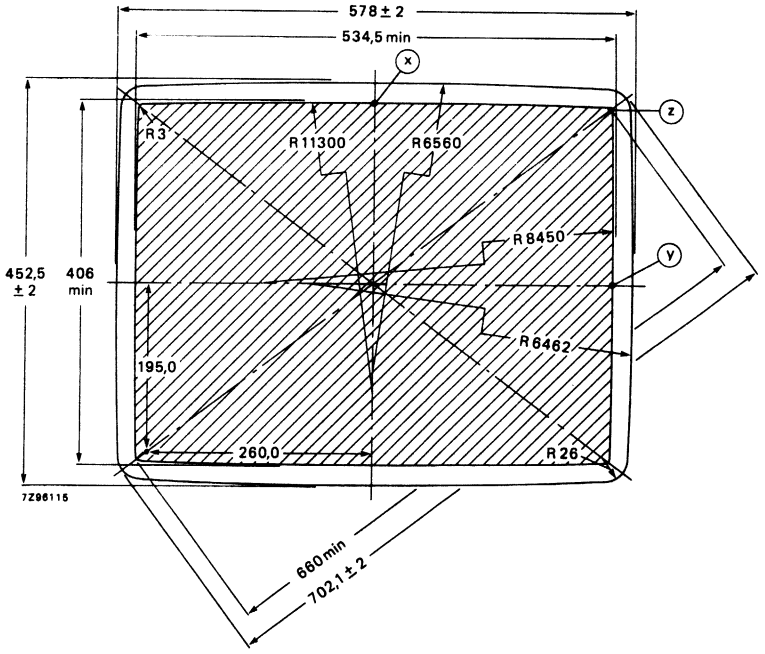
578 ± 2
534,5 min
X
Z
Y
R3
R11300
R6560
R8450
R6462
R26
452,5 ± 2
406 min
195,0
260,0
660 min
702,1 ± 2
7Z96115

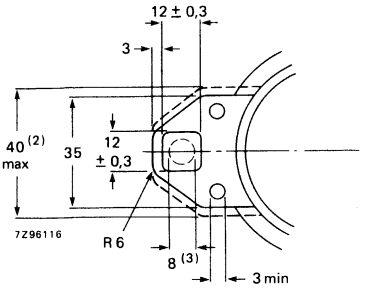
12 ± 0,3
3
40 (2) max
35
12 ± 0,3
R 6
8 (3)
3 min
7Z96116

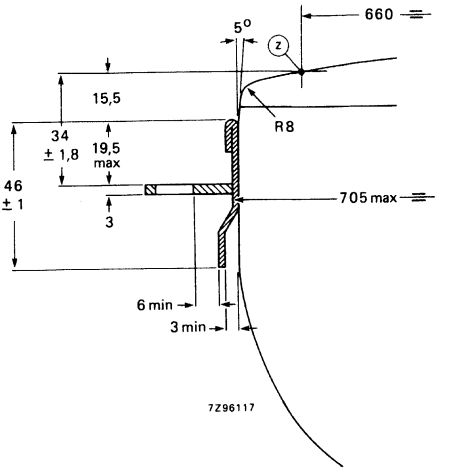
5°
Z
660
15,5
34 ± 1,8
19,5 max
R8
46 ± 1
705 max
3
6 min
3 min
7Z96117

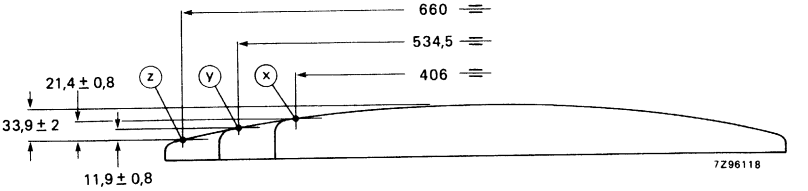
660
534,5
406
Z
Y
X
21,4 ± 0,8
33,9 ± 2
11,9 ± 0,8
7Z96118

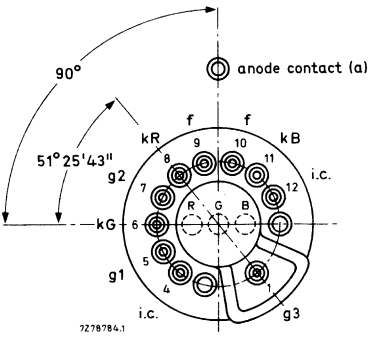
90°
anode contact (a)
51°25'43"
kR
f
f
kB
g2
i.c.
kG
g1
i.c.
g3
R
G
B
7Z78784.1

Notes to outline drawings on the preceding pages

1. The displacement of any lug with respect to the plane through the three other lugs is max. 1,5 mm.
2. Minimum space to be reserved for mounting lug.
3. The position of the mounting screw in the cabinet must be within a circle of 8 mm diameter drawn around the true geometrical positions, i.e. the corners of a rectangle of 581,5 mm x 450 mm.
4. The socket for this base should not be rigidly mounted; it should have flexible leads and be allowed to move freely. After mounting of the tube in the cabinet note that the position of the base can fall within a circle, having a diameter of max. 50 mm, concentric with an imaginary tube axis.

Sagittal heights with reference to screen centre at the edge of the minimum useful screen

coordinates		sagittal
x	y	height
mm	mm	mm
0*	203,0	12,5
20	203,0	12,6
40	202,9	13,0
60	202,8	13,6
80	202,7	14,5
100	202,6	15,6
120	202,4	16,9
140	202,1	18,5
160	201,9	20,4
180	201,6	22,5
200	201,2	24,9
220	200,9	27,5
240	200,4	30,3
260	200,0	33,5
264,0**	198,0	33,9
265,3	180	31,9
265,7	160	29,8
266,1	140	28,0
266,4	120	26,4
266,7	100	25,1
266,9	80	23,9
267,1	60	23,1
267,2	40	22,5
267,2	20	22,1
267,2▲	0	22,0

* Point (x).
** Diagonal.
▲ Point (y).

10-pin base; JEDEC B10-277

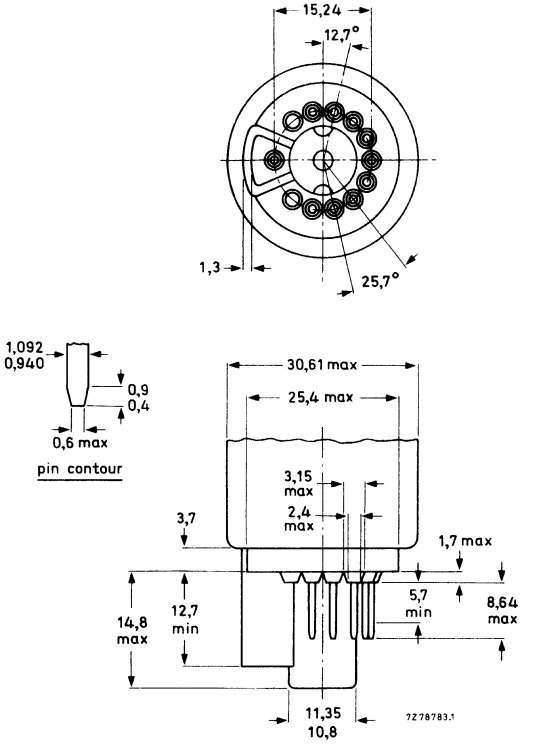

Cavity cap JEDEC J1-21, IEC 67-III-2

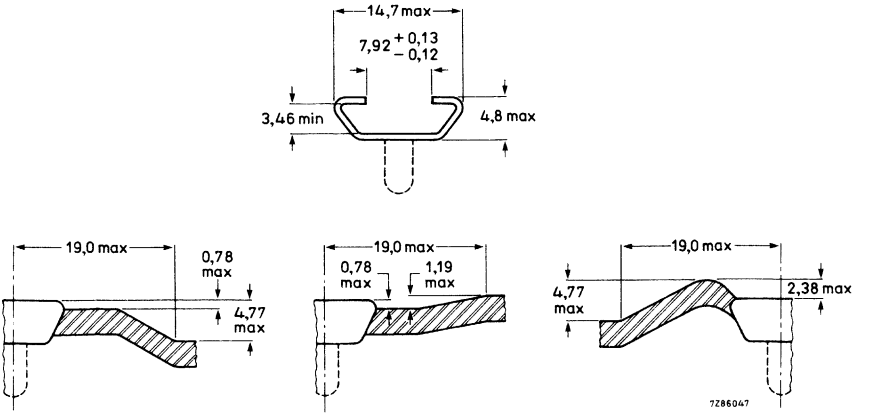

Maximum cone contour

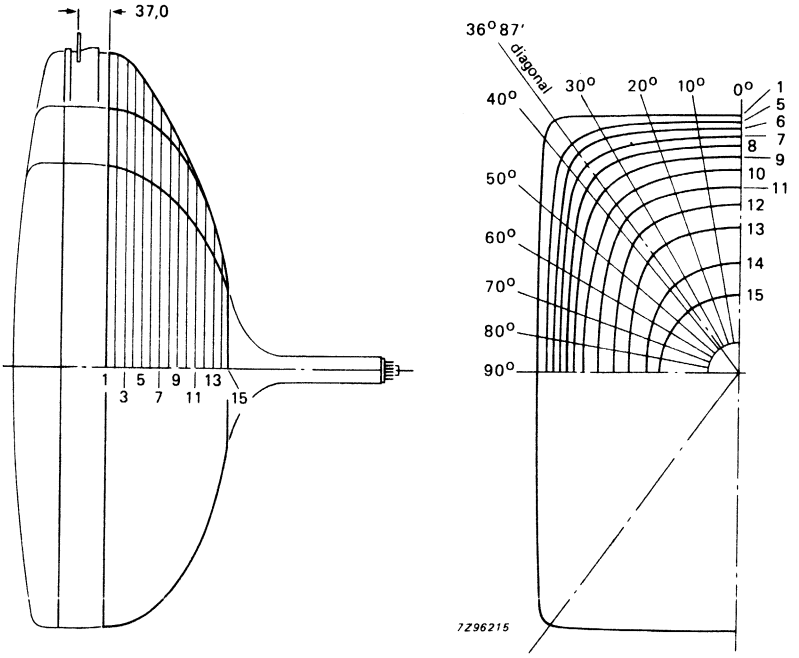

section	nom. distance from section 1	distance from centre										
		0°	10°	20°	30°	36,87°	40°	50°	60°	70°	80°	90°
1	0,00	287,2	291,4	304,9	329,6	349,8	341,6	289,2	257,0	237,4	226,8	223,5
2	10,00	286,6	290,8	304,2	328,8	348,1	339,9	288,4	256,2	236,7	226,1	222,8
3	20,00	285,0	289,2	302,4	326,4	342,6	334,6	285,6	253,8	234,5	224,1	220,8
4	30,00	282,1	286,1	298,9	321,2	332,5	324,7	279,7	249,2	230,5	220,3	217,1
5	40,00	277,7	281,5	293,5	313,3	319,6	312,1	271,7	242,7	224,8	215,1	212,0
6	50,00	271,6	275,2	286,3	302,8	305,1	298,2	262,4	235,2	218,2	208,9	205,9
7	60,00	263,8	267,1	276,9	287,8	289,2	283,0	252,1	227,0	211,0	202,1	199,3
8	70,00	253,9	256,8	265,2	274,3	271,9	266,6	240,6	217,8	202,9	194,6	192,0
9	80,00	241,4	243,9	250,9	257,0	253,7	249,1	227,2	207,0	193,2	185,6	183,1
10	90,00	225,6	227,8	233,6	237,8	234,3	230,2	211,4	193,4	180,9	173,9	171,6
11	100,00	207,1	209,1	214,0	217,4	213,8	210,0	192,9	176,7	165,4	159,0	157,0
12	110,00	186,8	188,4	192,6	195,1	191,4	187,7	172,1	157,5	147,5	141,8	139,9
13	120,00	163,7	165,0	168,0	169,0	165,3	162,1	149,2	137,1	128,6	123,7	122,1
14	130,00	126,3	126,7	126,8	125,3	123,2	121,9	117,1	112,0	107,7	104,7	103,7
15	137,12	88,4	88,4	88,4	88,4	88,4	88,4	88,4	88,4	88,4	88,4	88,4

TYPICAL OPERATING CONDITIONS

The voltages are specified with respect to grid 1.

Anode voltage	$V_{a,g4}$	25 kV
Grid 3 (focusing electrode) voltage	V_{g3}	7,25 to 8,25 kV
Grid 2 voltage for a spot cut-off voltage V_k = 130 V	V_{g2}	see below
Heater voltage under operating conditions	V_f	6,3 V

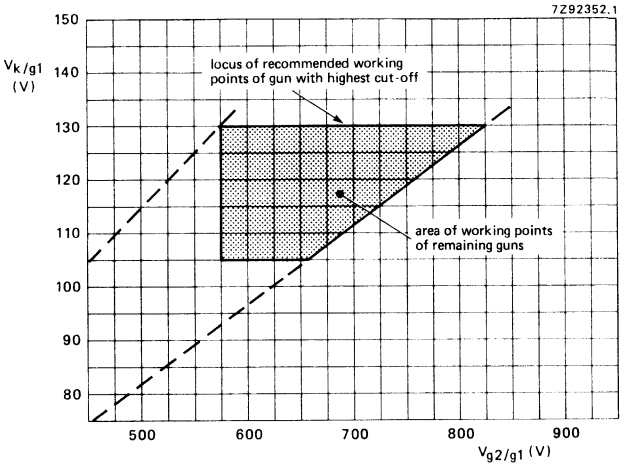

Spot cut-off design chart.

Grid 2 voltage (V_{g2}) adjusted for highest gun spot cut-off voltage V_k = 130 V.

Remaining guns adjusted for spot cut-off by means of cathode voltage

V_{g2} range 575 to 825 V;

V_k range 105 to 130 V.

Adjustment procedure:

Set the cathode voltage (V_k) for each gun at 130 V; increase the grid 2 voltage (V_{g2}) from approx. 550 V to the value at which one of the colours become just visible. Now decrease the cathode voltage of the remaning guns so that the other colours also become visible.

EQUIPMENT DESIGN VALUES

The values are valid for anode voltages between 20 and 27,5 kV.
The voltages are specified with respect to grid 1.

Grid 3 (focusing electrode) voltage	V_{g3}	29 to 33% of anode voltage
Grid 2 voltage and cathode voltage for visual extinction of focused spot	V_{g2} and V_k	see spot cut-off design chart
Difference in cut-off voltages between guns in any tube	ΔV_k	lowest value > 80% of highest value
Heater voltage	V_f	6,3 V at zero beam current
Video drive characteristics		see graphs*
Grid 3 (focusing electrode) current	I_{g3}	−2 to + 2 μA
Grid 2 current	I_{g2}	−2 to + 2 μA
Grid 1 current under cut-off conditions	I_{g1}	−2 to + 2 μA
To produce white of 6500K + 7 M.P.C.D. (CIE co-ordinates x = 0,313, y = 0,329)		
Percentage of the total anode current supplied by each gun (typical)		
red gun		38,3%
green gun		35,8%
blue gun		25,9%
Ratio of anode currents		
red gun to green gun		min. 0,8
		average 1,1
		max. 1,4
red gun to blue gun		min. 1,1
		average 1,5
		max. 1,9
blue gun to green gun		min. 0,5
		average 0,7
		max. 1,0
Insulation resistance between each cathode and grid 1 and heater		min. 50 MΩ

* For optimum picture performance it is recommended that the cathodes are not driven below + 1 V.

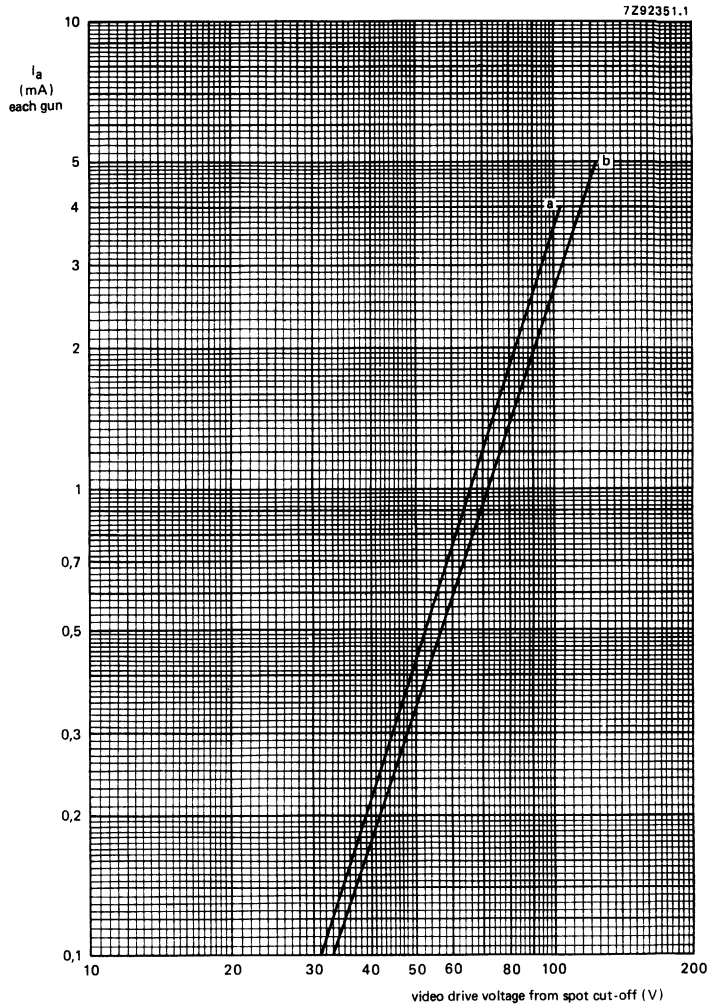

Typical cathode drive characteristic.

V_f = 6,3 V;

$V_{a,g4}$ = 25 kV;

V_{g3} adjusted for focus;

V_{g2} (each gun) adjusted to provide spot cut-off for V_k = 105 V (curve a) and V_k = 130 V (curve b).

LIMITING VALUES (Design maximum rating system unless otherwise stated)

The voltages are specified with respect to grid 1.

				notes
Anode voltage	$V_{a,g4}$	max.	27,5 kV	1, 2, 3
		min.	20 kV	1, 4
Long-term average current for three guns	I_a	max.	1000 μA	5
Grid 3 (focusing electrode) voltage	V_{g3}	max.	11 kV	
Grid 2 voltage	V_{g2}	max.	1200 V	6
Cathode voltage				
positive	V_k	max.	400 V	
positive operating cut-off	V_k	max.	200 V	
negative	$-V_k$	max.	0 V	
negative peak	$-V_{kp}$	max.	2 V	
Cathode to heater voltage				
positive	V_{kf}	max.	250 V	
positive peak	V_{kfp}	max.	300 V	1
negative	$-V_{kf}$	max.	135 V	
negative peak	$-V_{kfp}$	max.	180 V	1
Heater voltage	V_f		6,3 V $^{+5\ \%}_{-10\ \%}$	1, 7

LIMITING CIRCUIT VALUES

Grid 3 circuit resistance	R_{g3}	max.	70 MΩ	
Grid 1 to cathode circuit resistance (each gun)	R_{g1k}	max.	0,75 MΩ	

BEAM CENTRING

Maximum centring error in any direction	4 mm	

Notes

1. Absolute maximum rating system.
2. The X-ray dose rate remains below the acceptable value of 36 pA/kg (0,5 mR/h), measured with ionization chamber when the tube is used within its limiting values.
3. During adjustment on the production line this value is likely to be surpassed considerably. It is therefore strongly recommended to first make the necessary adjustments for normal operation without picture tube.
4. Operation of the tube at lower voltages impairs the luminance and resolution, and could impair convergence.
5. The short-term average anode current should be limited by circuitry to 1500 μA.
6. During adjustment on the production line max. 1500 V is permitted.
7. For maximum cathode life it is recommended that the heater supply be designed for 6,3 V at zero beam current.

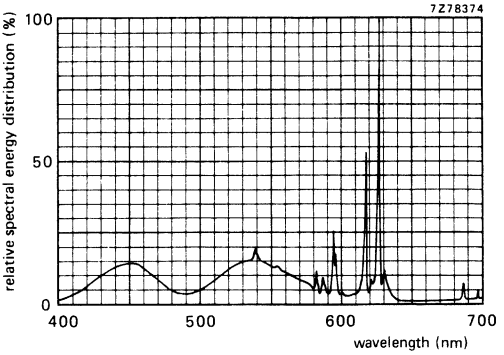

Simultaneous excitation of red, green and blue phosphor, measured in a tube, to produce white of x = 0,313, y = 0,329. Exact shape of the peaks depends on the resolution of the measuring apparatus.

Colour co-ordinates:	x	y
red	0,635	0,340
green	0,315	0,600
blue	0,150	0,060

DEGAUSSING

The picture tube is provided with an internal magnetic shield. This shield and the shadow mask with its suspension system may be provided with an automatic degaussing system, consisting of two coils covering top and bottom cone parts, or on large coil.

For proper degaussing an initial magnetomotive force (m.m.f.) of 300 ampere-turns is required in each of the coils. This m.m.f. has to be gradually decreased by appropriate circuitry. To prevent beam landing disturbances by line-frequency currents induced in the degaussing coils, these coils should be shunted by a capacitor of sufficiently high value. In the steady state, no significant m.m.f. should remain in the coils ($\leqslant$ 0,15 ampere-turns).

If single-phase power rectification is employed in the TV circuitry, provision should be included to prevent asymmetric distortion of the a.c. voltage applied to the degaussing circuit due to high d.c. inrush currents.

To ease the mounting of the coils, the rimband is provided with rectangular holes.

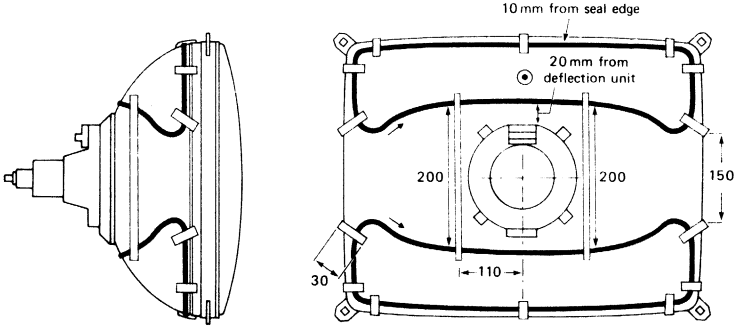

length of degaussing coil : 1,48 m

Double-coil system.

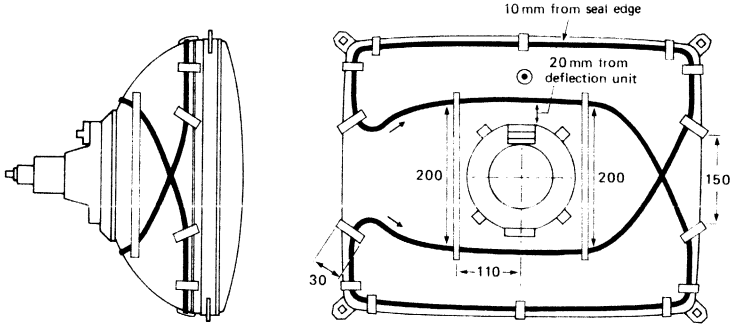

length of degaussing coil : 3,13 m

Single-coil system.

7Z91928

Degaussing circuit using dual PTC thermistor 2322 662 98009; C = 100 nF.

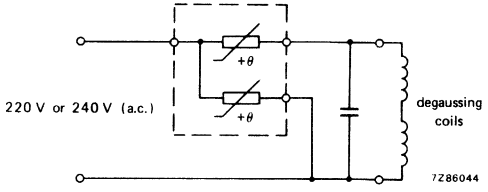

Data of each degaussing coil

	double-coil system	single-coil system
Circumference	148 cm	313 cm
Number of turns	60	60
Copper-wire diameter	0,4 mm	0,4 mm
Aluminium-wire diameter	0,5 mm	0,5 mm
Resistance	12 Ω	25 Ω

110° FLAT SQUARE COLOUR PICTURE TUBE ASSEMBLY

- Factory preset tube/coil assembly
- Self-converging and north-south raster correction free
- 66 cm, 110° colour picture tube A66EAK00X
- Double saddle deflection unit AT6000/01

QUICK REFERENCE DATA

Deflection angle	110°
Minimum useful screen diagonal	66 cm
Overall length	42 cm
Neck diameter	29,1 mm

MECHANICAL DATA

Dimensions in mm

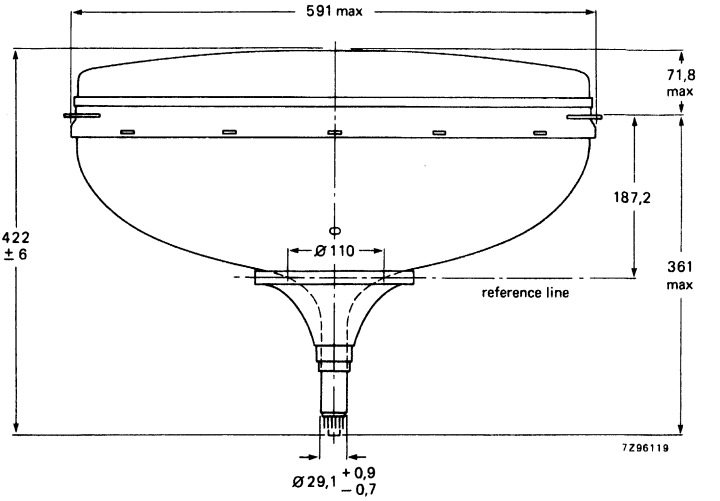

Net mass of tube assembly: 25,5 kg.

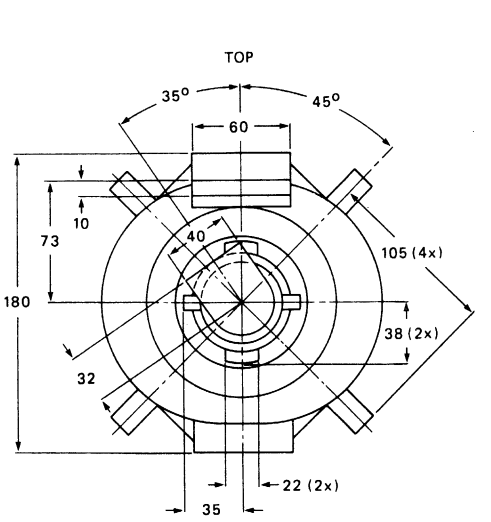

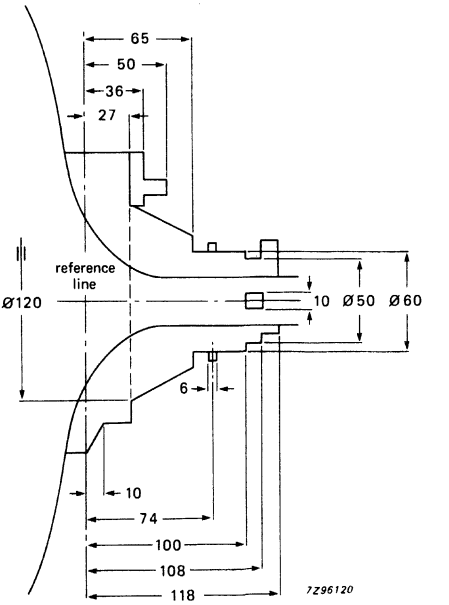

Yoke clearance.

ELECTRICAL DATA OF DEFLECTION UNIT

Line coils	parallel connected
Inductance at 1 V (r.m.s.), 1 kHz	1,85 mH
Resistance at 25 °C	1,85 Ω
Magnetic flux	7,6 mWb ± 5%
Line deflection current, edge to edge, at 25 kV	4,1 A (p-p)
Field coils	series connected
Inductance at 1 V (r.m.s.), 1 kHz	11 mH
Resistance at 25 °C	6,5 Ω
Field deflection current, edge to edge, at 25 kV	1,7 A (p-p)

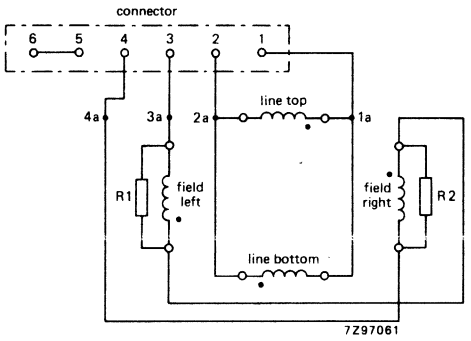

Electrical diagram.
The beginning of the windings is indicated with ●.
R1 = R2 = 100 Ω, 0,25 W.
Matching Stocko connector MKF806-1-0-606.

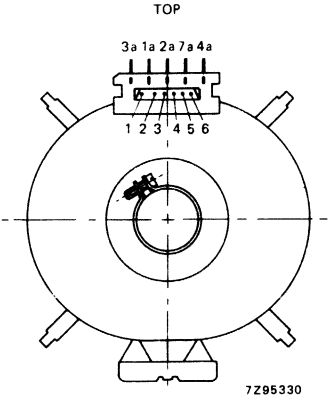

Terminal location.

110° FLAT SQUARE COLOUR PICTURE TUBE ASSEMBLY

- Factory preset tube/coil assembly
- Self-converging and north-south raster correction free
- 66 cm, 110° colour picture tube A66EAK00X
- Double saddle deflection unit AT6000/01

QUICK REFERENCE DATA

Deflection angle	110°
Minimum useful screen diagonal	66 cm
Overall length	42 cm
Neck diameter	29,1 mm

MECHANICAL DATA

Dimensions in mm

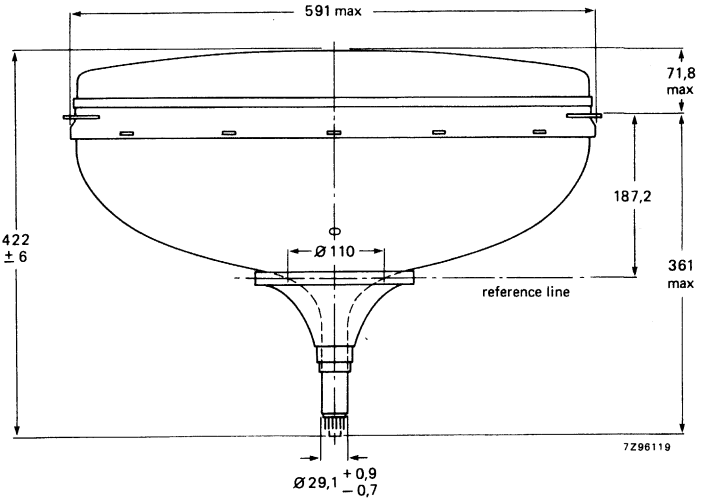

Net mass of tube assembly: 25,5 kg

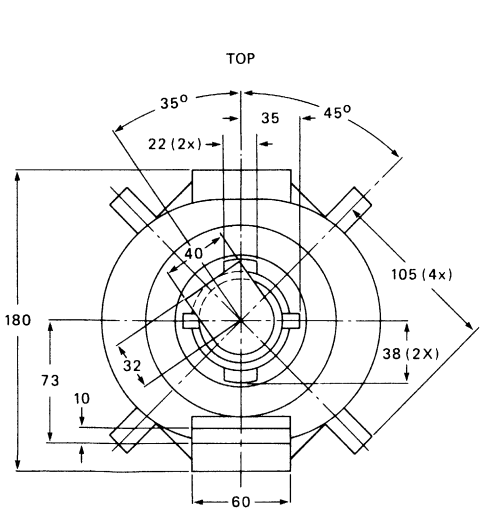

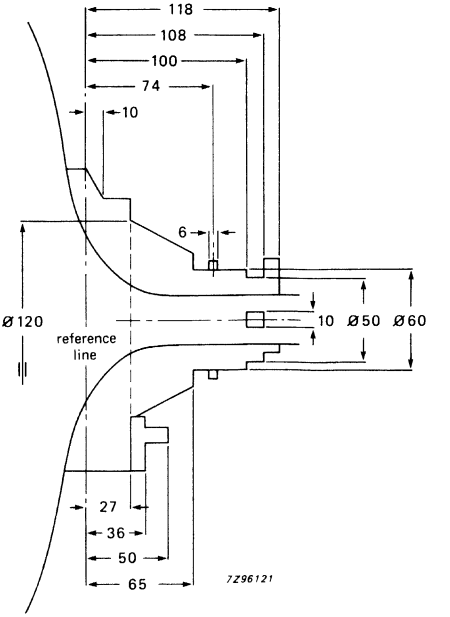

Yoke clearance.

ELECTRICAL DATA OF DEFLECTION UNIT

Line coils	parallel connected
Inductance at 1 V (r.m.s.), 1 kHz	1,85 mH
Resistance at 25 °C	1,85 Ω
Magnetic flux	7,6 mWb ± 5%
Line deflection current, edge to edge, at 25 kV	4,1 A (p-p)
Field coils	series connected
Inductance at 1 V (r.m.s.), 1 kHz	11 mH
Resistance at 25 °C	6,5 Ω
Field deflection current, edge to edge, at 25 kV	1,7 A (p-p)

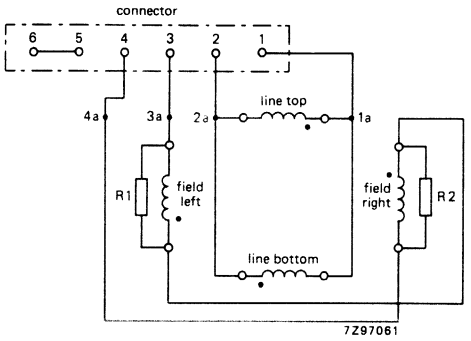

Electrical diagram.
The beginning of the windings is indicated with ●.
R1 = R2 = 100 Ω, 0,25 W.
Matching Stocko connector MKF806-1-0-606.

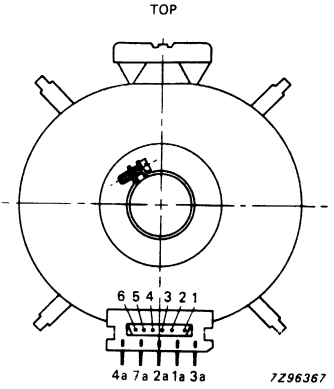

Terminal location.

110° FLAT SQUARE COLOUR PICTURE TUBE ASSEMBLY

- Factory preset tube/coil assembly
- Self-converging and north-south raster correction free
- 66 cm, 110° colour picture tube A66EAK00X
- Double saddle deflection unit AT6000/11

QUICK REFERENCE DATA

Deflection angle	110°
Minimum useful screen diagonal	66 cm
Overall length	42 cm
Neck diameter	29,1 mm

MECHANICAL DATA

Dimensions in mm

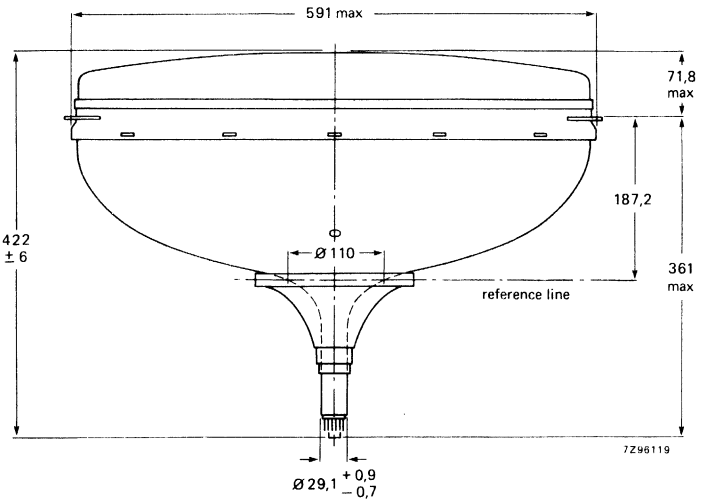

Net mass of tube assembly: 25,5 kg.

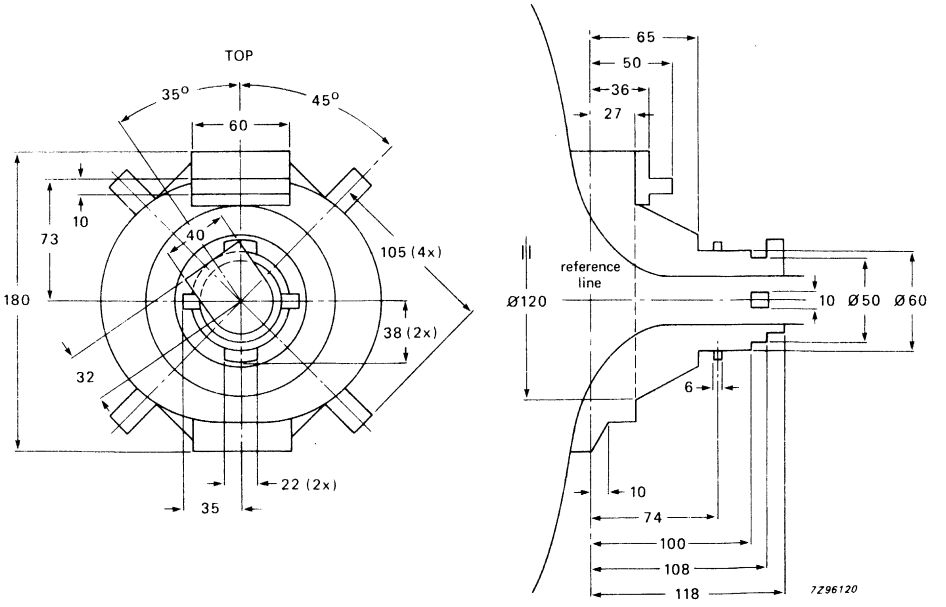

Yoke clearance.

ELECTRICAL DATA OF DEFLECTION UNIT

Line coils	parallel connected
Inductance at 1 V (r.m.s.), 1 kHz	1,85 mH
Resistance at 25 °C	1,85 Ω
Magnetic flux	7,6 mWb ± 5%
Line deflection current, edge to edge, at 25 kV	4,1 A (p-p)
Field coils	series connected
Inductance at 1 V (r.m.s.), 1 kHz	11 mH
Resistance at 25 °C	6,5 Ω
Field deflection current, edge to edge, at 25 kV	1,7 A (p-p)

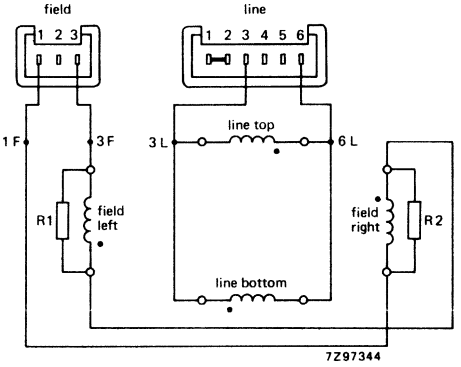

Electrical diagram.
The beginning of the windings is indicated with ●.
R1 = R2 = 100 Ω, 0,25 W.
Matching connectors: 572201340 (field)
572201370 (line).

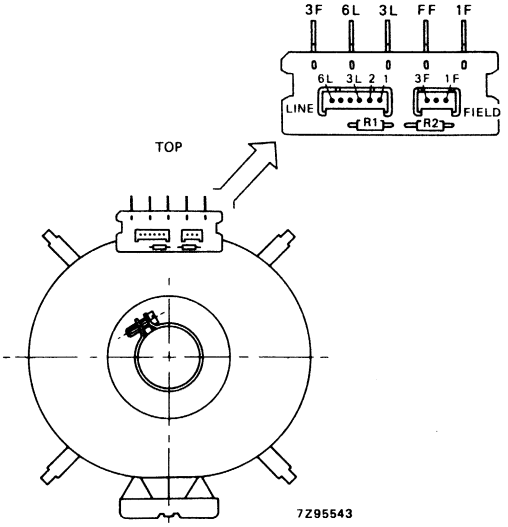

Terminal location.

COLOUR DATA GRAPHIC DISPLAY TUBE ASSEMBLIES

MEDIUM RESOLUTION COLOUR DISPLAY TUBE ASSEMBLIES

- 90° deflection angle
- In-line gun, thermally stable; electrostatic hi-bi-potential for improved focus
- 29,1 mm neck diameter
- Pigmented phosphors
- Dark glass featuring extra high contrast performance
- Soft-Flash technology offering improved set reliability
- Slotted shadow mask optimized for minimum moiré
- 0,42 mm phosphor pitch
- Phosphor lines follow glass contour
- Quick-heating cathodes
- Internal magnetic shield
- Rimband type implosion protection
- Supplied as a pre-aligned, self-converging and raster correction free tube-coil assembly; dynamic convergence is not required ←
- M34EAQ00X . .: assembly with display tube with etched screen
- M34EAQ10X . .: assembly with display tube with high gloss screen

QUICK REFERENCE DATA

Deflection angle	90°
Face diagonal	37 cm (14 inch)
Overall length	341,5 mm
Neck diameter	29,1 mm
Resolution: number of displayable pixels*	480 x 360
Heating	6,3 V, 685 mA
Focusing voltage	28% of anode voltage

* Pixel = picture element.

ELECTRON-OPTICAL DATA

Electron gun system		unitized in-line
Focusing method		electrostatic
Focus lens		bi-potential
Convergence method		magnetic
Deflection method		magnetic
Deflection angles		
diagonal		approx. 90°
horizontal		approx. 78°
vertical		approx. 60°

ELECTRICAL DATA

Tube

Capacitances		
anode to external conductive coating including rimband	$C_{a(m+m')}$	max. 1600 pF min. 800 pF
grid 1 of any gun to all other electrodes	C_{g1}	17 pF
cathodes of all guns, connected in parallel, to all other electrodes	C_k	15 pF
cathode of any gun to all other electrodes	C_{kR}, C_{kG}, C_{kB}	5 pF
focusing electrode to all other electrodes	C_{g3}	6 pF
Heating		indirect by a.c. or d.c.
heater voltage	V_f	6,3 V
heater current	I_f	685 mA

Deflection unit

Line deflection coils, Fig. 1		parallel connected
inductance		1,89 mH
resistance		2,0 Ω
Line deflection current, edge to edge, at 25 kV		3,0 A(p-p)

Field deflection coils, Fig. 2	in parallel	in series
inductance	29 mH	116 mH
resistance	13,5 Ω	54 Ω
Field deflection current, edge to edge, at 25 kV	0,83 A(p-p)	0,41 A(p-p)

Maximum permissible voltage	
between line and field coils	3000 V (d.c.)
between field coils and core	300 V (d.c.)
Insulation resistance	
between line and field coils, at 1 kV (d.c.)	500 MΩ
between line coil and core clamping ring, at 500 V (d.c.)	30 MΩ
between field coil and core clamping ring, at 1000 V (d.c.)	100 MΩ
Cross-talk	a voltage of 1 V, 15625 Hz applied to the line coils causes no more than 20 mV across the field coils

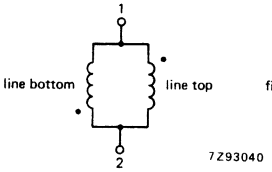

Fig. 1 Line coils.

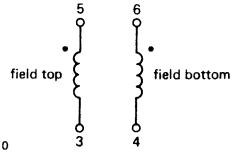

Fig. 2 Field coils.

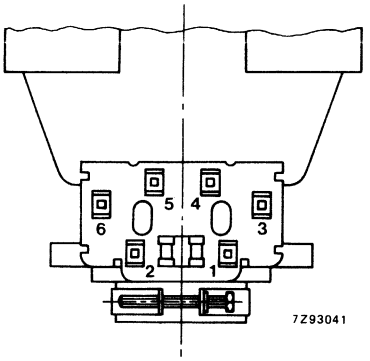

Fig. 3 Terminal location of deflection coils.

OPTICAL DATA

Screen	metal-backed phosphor stripes; phosphor lines follow glass contour
Screen finish	
M34EAQ00X	etched
M34EAQ10X	high gloss
Useful screen dimensions	
diagonal	min. 335,4 mm (13,20 in)
horizontal axis	min. 280,8 mm (11,06 in)
vertical axis	min. 210,6 mm (8,29 in)
area	min. 580 cm^2 (89,90 in^2)
Recommended useful screen dimensions for alphanumeric display	
diagonal	307 mm (12,09 in)
horizontal axis	244 mm (9,61 in)
vertical axis	186 mm (7,32 in)
Phosphors	
red	rare earth, europium activated, pigmented
green	sulphide type
blue	sulphide type, pigmented
Phosphor colour co-ordinates	
red	x = 0,635; y = 0,340
green	x = 0,315; y = 0,600
blue	x = 0,150; y = 0,060
Centre-to-centre distance of vertical identical colour phosphor stripes, at screen centre	0,42 mm (0,016 in)
Light transmission of face glass at centre	46%
Number of displayable pixels	480 x 360

MECHANICAL DATA (see also the figures on the following pages)

Overall length	341,6 ± 5 mm (13,45 ± 0,20 in)
Neck diameter	29,1 mm (1,15 in)
Bulb dimensions	
diagonal	max. 368 mm (max. 14,49 in)
width	max. 317 mm (max. 12,48 in)
height	max. 248 mm (max. 9,76 in)
Bulb	
funnel	EIAJ-J370AG1/JEDEC J365C18
panel	EIAJ-J370CF1
Implosion protection	shrink type (UL approved)
Anode contact designation	JEDEC J1-21; IEC 67-III-2
Base designation	10-pin base JEDEC B10-277
Basing designation	see Fig. 10
Mass	approx. 6 kg (13,2 lbs)
Mounting position	anode contact on top

Notes to outline drawings on the following pages

1. Configuration of outer conductive coating may be different but will contain the contact area as shown in the drawing.
2. To clean this area, wipe only with a soft lintless cloth.
3. One of the four mounting lugs may deviate 1 mm (0,04 in) max. from the plane of the other three lugs. This deviation is incorporated in the tolerance of ± 1,8 mm (0,07 in).
4. Minimum space to be reserved for mounting lug.
5. The position of the mounting screw in the cabinet must be within a circle of 9,5 mm (0,37 in) diameter drawn around the true geometrical positions, i.e. the corners of a rectangle of 311,4 x 243,2 mm (12,26 x 9,57 in).
6. Co-ordinates for radius R = 11,6 mm (0,46 in); x = 126,98 mm (4,999 in); y = 90,76 mm (3,573 in).
7. Not applicable.
8. The socket for this base should not be rigidly mounted; it should have flexible leads and be allowed to move freely. After mounting of the tube in the cabinet note that the position of the base can fall within a circle, having a diameter of max. 50 mm (1,968 in), concentric with an imaginary tube axis.
   The mass of the mating socket with circuitry should not be more than 150 g, maximum permissible torque is 40 mNm.
9. Small cavity contact J1-21, IEC 67-III-2.
10. The X, Y and Z reference points are located on the outside surface of the face plate 3,2 mm (0,13 in) beyond the intersection of the minor, major and diagonal screen axis respectively, with the minimum published screen.

MECHANICAL DATA (continued)

The dimensions are given in mm, and in inches between brackets.

Notes are on the preceding page.

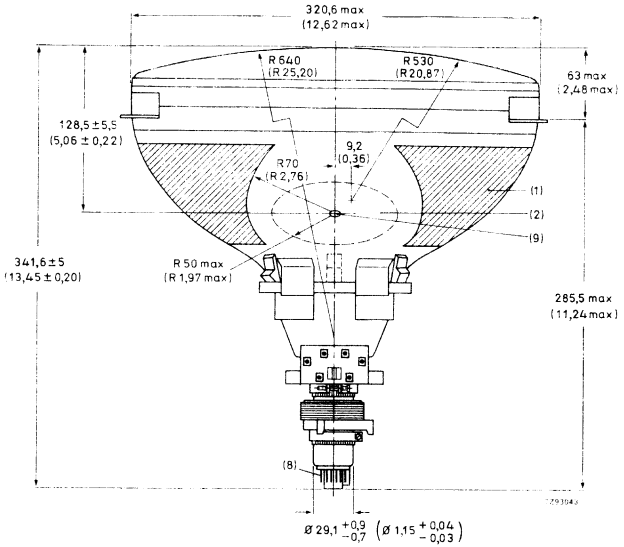

Fig. 4a.

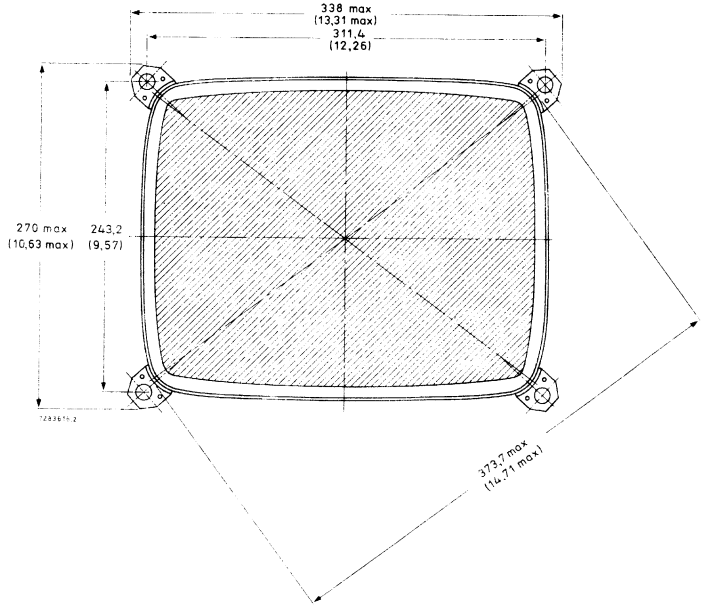

Fig. 4b.

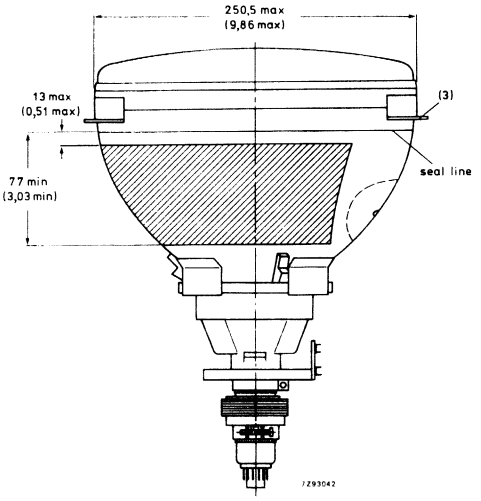
250,5 max
(9,86 max)
13 max
(0,51 max)
(3)
seal line
77 min
(3,03 min)
7Z93042

Fig. 4c.

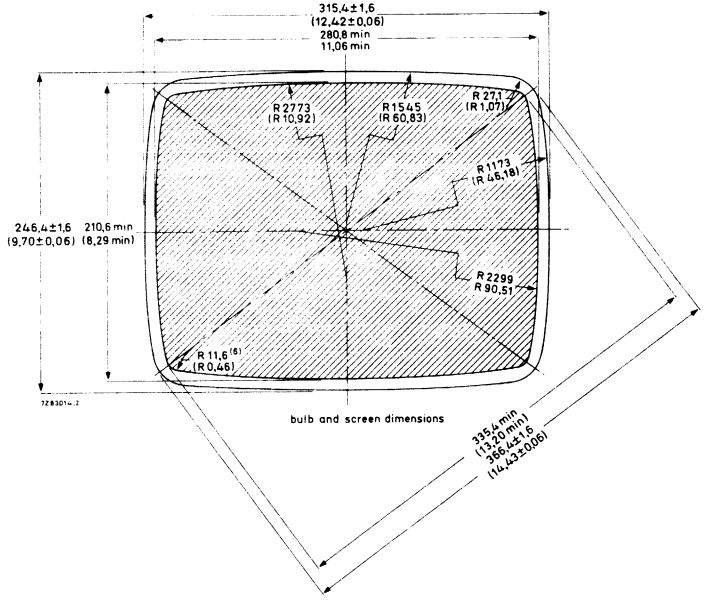
315,4±1,6
(12,42±0,06)
280,8 min
11,06 min
R 2773
(R 10,92)
R1545
(R 60,83)
R 271
(R 1,07)
R 1173
(R 46,18)
246,4±1,6
(9,70±0,06)
210,6 min
(8,29 min)
R 2299
R 90,51
R 11,6 (6)
(R 0,46)
7Z83014.2
bulb and screen dimensions
335,4 min
(13,20 min)
366,4±1,6
(14,43±0,06)

Fig. 5.

MECHANICAL DATA (continued)

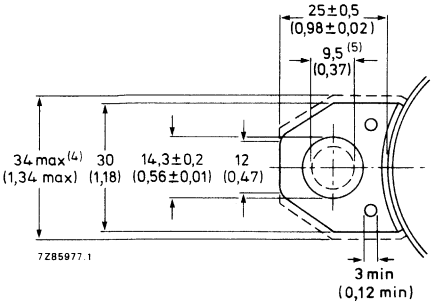

Fig. 6.

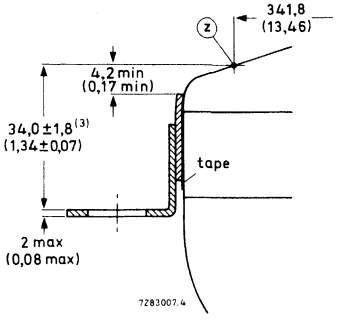

Fig. 7.

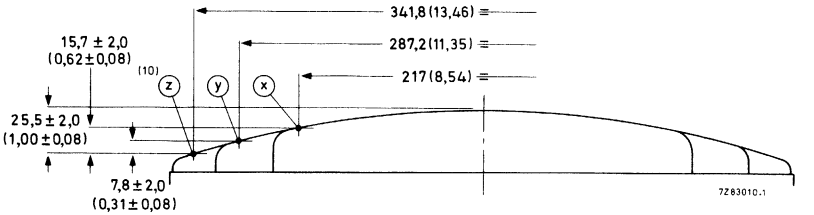

Fig. 8.

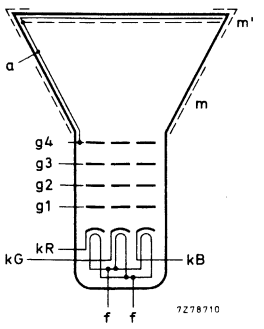

Fig. 9.

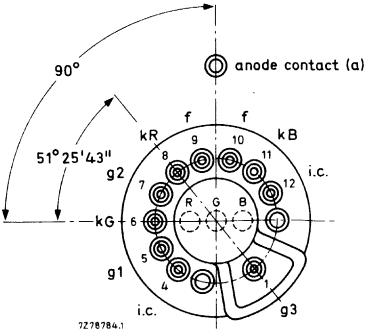

Fig. 10 i.c. = internally connected (not to be used).

Maximum cone contour

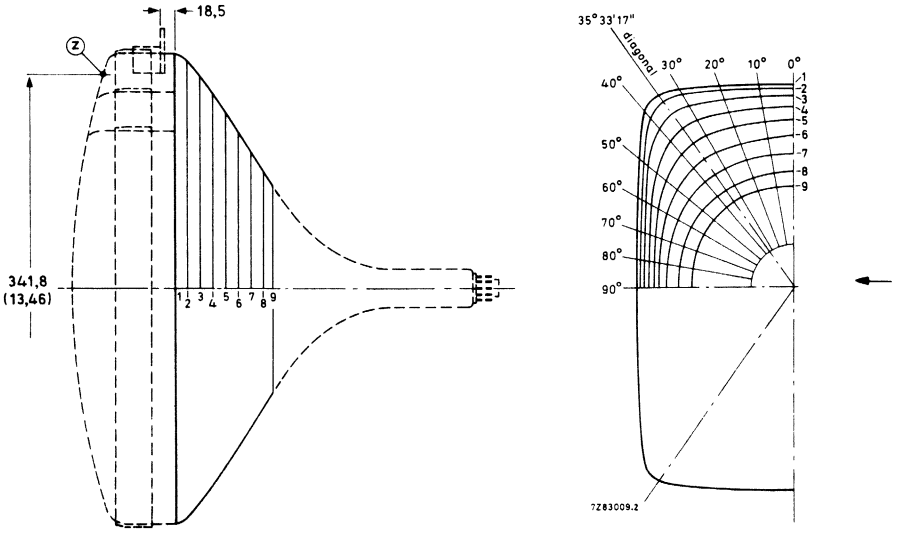

Fig. 11.

section	nom. distance from section 1	distance from centre (max. values)														
		0°	10°	20°	25°	30°	32° 30'	diag. axes	37° 30'	40°	45°	50°	60°	70°	80°	90°
Dimensions in mm																
1	0	157,2	159,4	166,3	171,7	178,2	181,2	183,6	183,3	180,0	167,9	156,5	140,0	129,8	124,2	122,4
2	10	154,7	156,9	163,5	168,5	174,1	176,6	178,1	177,7	174,8	164,4	153,7	137,8	127,9	122,4	120,7
3	20	148,8	150,7	156,3	160,0	163,5	164,6	165,0	164,4	162,6	156,0	147,7	133,6	124,4	119,3	117,7
4	30	140,4	142,1	146,2	148,6	150,5	151,0	151,1	150,7	149,6	145,6	140,0	128,6	120,3	115,7	114,2
5	40	130,3	131,3	134,0	135,4	136,5	136,8	136,8	136,6	136,1	134,1	130,8	122,7	115,9	111,7	110,3
6	50	118,2	118,8	120,1	120,9	121,6	121,8	122,0	122,0	121,9	121,2	119,8	115,4	110,5	107,0	105,8
7	60	104,9	104,7	105,1	105,5	106,0	106,2	106,5	106,7	106,9	107,1	107,0	105,6	103,1	100,8	99,8
8	70	90,6	89,9	89,8	90,0	90,4	90,6	90,9	91,1	91,4	91,9	92,3	92,5	91,7	90,4	89,7
9	77	79,9	79,1	79,0	79,1	79,4	79,6	79,9	80,1	80,4	80,9	81,4	81,8	81,4	80,5	79,9
Dimensions in inches																
1	0	6,19	6,28	6,55	6,76	7,02	7,13	7,23	7,22	7,09	6,61	6,16	5,51	5,11	4,89	4,82
2	0,39	6,09	6,18	6,44	6,63	6,85	6,95	7,01	7,00	6,88	6,47	6,05	5,43	5,04	4,82	4,75
3	0,79	5,86	5,93	6,15	6,29	6,44	6,48	6,50	6,47	6,40	6,14	5,81	5,26	4,90	4,70	4,63
4	1,18	5,53	5,59	5,76	5,85	5,92	5,94	5,95	5,93	5,89	5,73	5,51	5,06	4,74	4,56	4,50
5	1,57	5,13	5,17	5,28	5,33	5,37	5,39	5,39	5,38	5,36	5,27	5,15	4,83	4,56	4,40	4,34
6	1,97	4,65	4,68	4,73	4,76	4,79	4,80	4,80	4,80	4,80	4,77	4,72	4,54	4,35	4,21	4,17
7	2,36	4,13	4,12	4,14	4,15	4,17	4,18	4,19	4,20	4,21	4,22	4,21	4,16	4,06	3,97	3,94
8	2,76	3,57	3,54	3,54	3,54	3,56	3,57	3,58	3,59	3,60	3,62	3,63	3,64	3,61	3,56	3,53
9	3,03	3,15	3,11	3,11	3,11	3,13	3,13	3,15	3,15	3,17	3,19	3,20	3,22	3,20	3,17	3,15

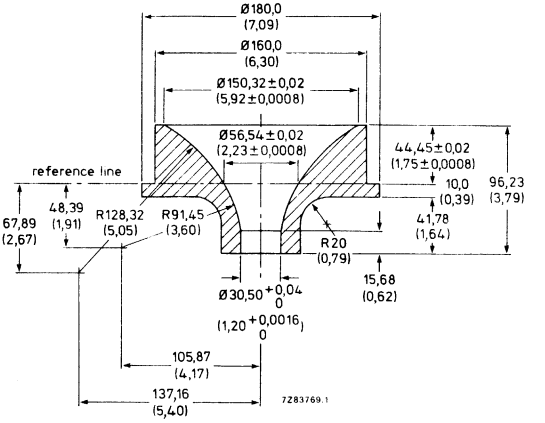

Fig. 12.

10-PIN BASE JEDEC B10-277

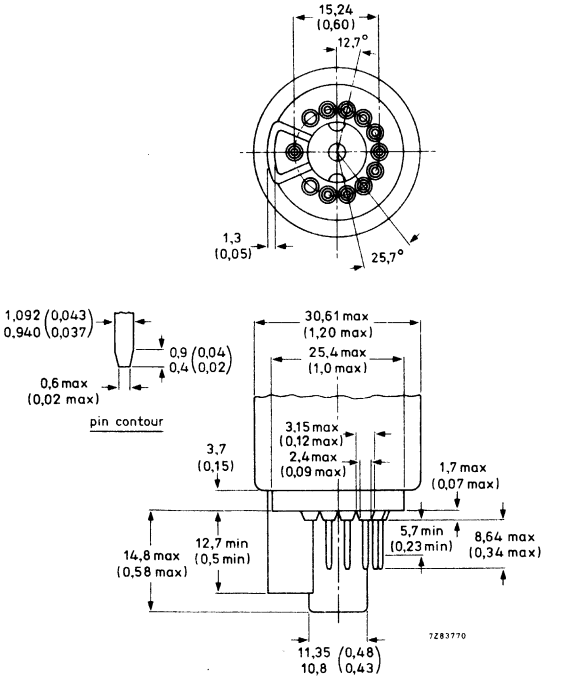

Fig. 13.

RECOMMENDED OPERATING CONDITIONS (cathode drive)

The voltages are specified with respect to grid 1.

Anode voltage	$V_{a,g4}$	25 kV
Grid 3 (focusing electrode) voltage	V_{g3}	6,6 to 7,5 kV
Grid 2 voltage	V_{g2}	see Fig. 14 ←
Luminance at the centre of the screen*	L	80 cd/m² (23,2 foot lambert)

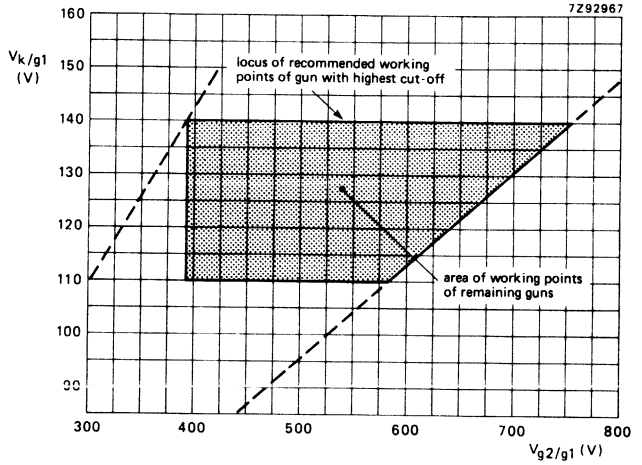

Fig. 14 Spot cut-off design chart.

Grid 2 voltage (V_{g2}) adjusted for highest gun spot cut-off voltage V_k = 140 V.

Remaining guns adjusted for spot cut-off by means of cathode voltage.

V_{g2} range 390 to 760 V

V_k range 110 to 140 V.

Adjustment procedure:

Set the cathode voltage (V_k) for each gun at 140 V; increase the grid 2 voltage (V_{g2}) from approx. 400 V to the value at which one of the colours becomes just visible. Now decrease the cathode voltage of the remaining guns so that the other colours also become visible.

* Tube setting adjusted to produce white of 9300K + 27 M.P.C.D. (x = 0,281, y = 0,311), focused raster, current density 0,4 μA/cm².

EQUIPMENT DESIGN VALUES (each gun if applicable)

The values are valid for anode voltages between 20 and 27,5 kV.
The voltages are specified with respect to grid 1.

Grid 3 (focusing electrode) voltage	V_{g3}	26,6 to 29,8% of anode voltage
Grid 2 voltage and cathode voltage for visual extinction of focused spot	V_{g2} and V_k	see Fig. 14
Difference in cut-off voltages between guns in any tube	ΔV_k	lowest value $\geqslant$ 80% of highest value
Cathode drive characteristic		see Fig. 15
Grid 3 (focusing electrode) current	I_{g3}	−5 to + 5 μA
Grid 2 current	I_{g2}	−5 to + 5 μA
Grid 1 current at V_k = 100 V	I_{g1}	−5 to + 5 μA

To produce white of 9300 K + 2700 M.P.C.D. (CIE co-ordinates x = 0,281, y = 0,311):

percentage of total anode current supplied by each gun			
red gun	27,9%		
green gun	39,1%		
blue gun	33,0%		
ratio of anode currents	min.	av.	max.
red gun to green gun	0,5	0,7	1,0
red gun to blue gun	0,6	0,9	1,2
blue gun to green gun	0,6	0,9	1,2

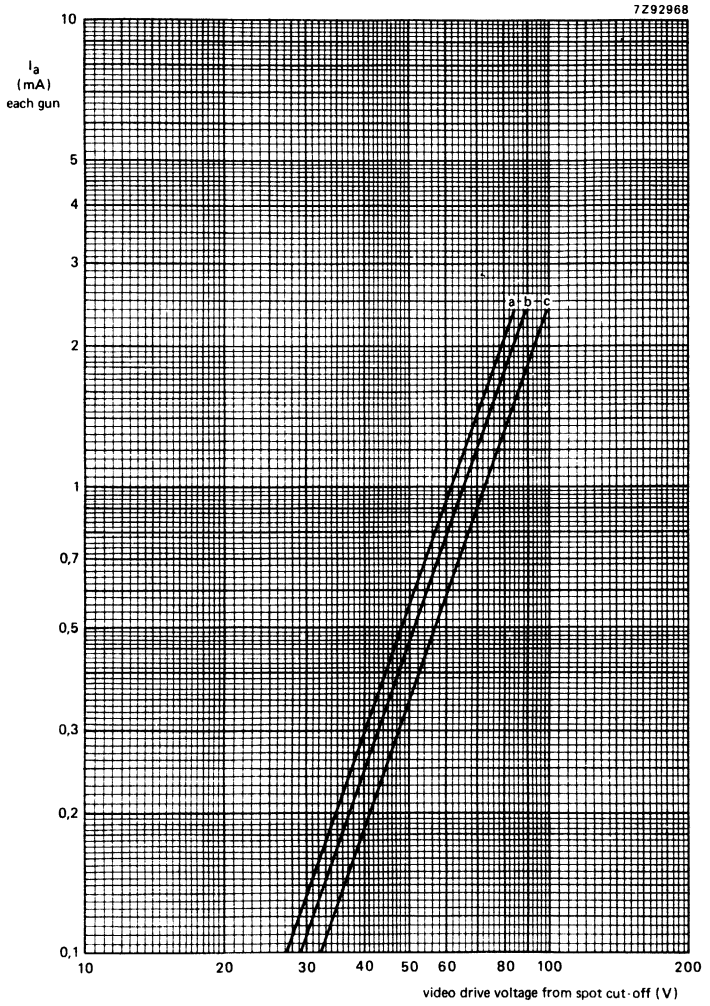

Fig. 15 Typical cathode drive characteristics.

V_{g2} adjusted to provide spot cut-off for
V_k = 90 V (curve a),
V_k = 110 V (curve b),
V_k = 140 V (curve c).

V_f = 6,3 V.
V_{g4} = 25 kV.
V_{g3} adjusted for focus.

LIMITING VALUES (each gun if applicable)

Tube

Design maximum rating system unless otherwise stated.
The voltages are specified with respect to grid 1.

					notes
Anode voltage	$V_{a,g4}$	max. min.	27,5 kV 20 kV		1 and 2 3
→ Anode current for each gun, peak value	I_{ap}	max.	400	μA	
Long term average anode current for each gun	I_a	max.	200	μA	
Long term average anode current for three guns	I_a	max.	450	μA	4
Grid 3 (focusing electrode) voltage	V_{g3}	max.	11	kV	
Grid 2 voltage, peak, including video signal voltage	V_{g2p}	max.	1000	V	
Cathode voltage					
positive	V_k	max.	400	V	
positive operating cut-off	V_k	max.	200	V	
negative	$-V_k$	max.	0	V	
negative peak	$-V_{kp}$	max.	2	V	
Cathode to heater voltage					
positive	V_{kf}	max.	250	V	
positive peak	V_{kfp}	max.	300	V	1
negative	$-V_{kf}$	max.	0	V	
negative peak	$-V_{kfp}$	max.	200	V	1
Heater voltage	V_f		6,3	$V^{+5\%}_{-10\%}$	1 and 5

Deflection unit

Maximum operating temperature			95	°C	

LIMITING CIRCUIT VALUES

Grid 3 circuit resistance	R_{g3}	max.	30	MΩ	
Grid 1 to cathode circuit resistance (each gun)	R_{g1k}	max.	0,75	MΩ	

Notes

1. Absolute Maximum rating system.
2. During adjustment on the production line this value is likely to be surpassed considerably. It is therefore strongly recommended first to make the necessary adjustments for normal operation.
3. Operation of the tube at lower voltages impairs the luminance and resolution.
4. The short term average anode current should be limited by circuitry to 600 μA.
5. For maximum cathode life and optimum performance, it is recommended that the heater supply be designed for 6,3 V at zero beam current.

FLASHOVER PROTECTION

With the high voltage used with this tube (max. 27,5 kV) internal flashovers may occur. As a result of the Soft-Flash technology these flashover currents are limited to approx. 60 A offering higher set reliability, optimum circuit protection and component savings.
Primary protective circuitry using properly grounded spark gaps and series isolation resistors (preferably carbon composition) is still necessary to prevent tube damage. The spark gaps should be connected to all picture tube electrodes at the socket according to the figure below; they are not required on the heater pins. No other connections between the outer conductive coating and the chassis are permissible.
The spark gaps should be designed for a breakdown voltage at the focusing electrode (g3) of 11 kV ($1,5 \times V_{g3}$ max. at $V_{a,g4}$ = 25 kV), and at the other electrodes of 1,5 to 2 kV.
The values of the series isolation resistors should be as high as possible (min. 1,5 kΩ) without causing deterioration of the circuit performance. The resistors should be able to withstand an instantaneous surge of 20 kV for the focusing circuit and 12 kV for the remaining circuits without arcing.
Additional information is available on request.

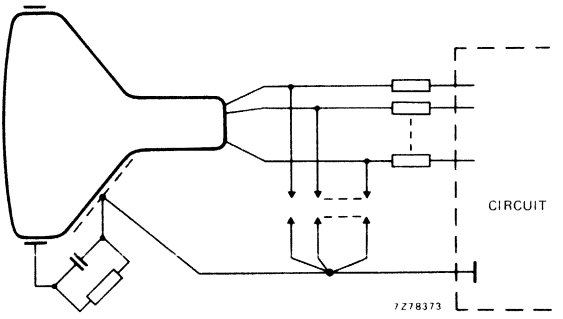

Fig. 16.

X-RADIATION LIMIT

Maximum anode voltage at which the X-radiation emitted will not exceed 0,5 mR/h at an anode current of 300 μA

entire tube	31 kV*
face-plate only	33 kV

Warning:

If the value for the tube face only is used as design criterion, adequate shielding must be provided in the monitor for the anode contact and/or certain portions of the tube funnel and panel skirt to insure that the X-radiation from the monitor is attenuated to a value equal to or lower than that specified for the face of the tube.

Maximum voltage difference between anode and focus electrode at which the X-radiation will not exceed 0,5 mR/h 30 kV

Warning:

If the voltage value above can be exceeded in the monitor additional attenuation of the X-radiation through the tube neck may be required.

The X-radiation emitted from this display tube, as measured in accordance with the procedure of JEDEC Publication No. 64D, will not exceed 0,5 mR/h throughout the useful tube life when operated within the 'Design maximum ratings'.

The tube should not be operated beyond its 'Design maximum ratings' stated above, but its X-radiation will not exceed 0,5 mR/h for anode voltage and current combinations given by the isoexposure-rate limits characteristics shown on the next page.

Operation above the values shown by the curve may result in failure of the monitor to comply with the Federal Performance Standard of the U.S. for Television Receivers, Section 1020. 10 of Part 1020 of Title 21, Code of Federal Regulation (PL90-602) as published in the Federal Register Volume 38, No. 198, Monday, October 15, 1973.

Maximum X-radiation as a function of anode voltage at 300 μA anode current is shown by the curve on the next page. X-radiation at a constant anode voltage varies linearly with anode current.

* This rating applies only if the anode connector used by the set maker provides the necessary attenuation to reduce the X-radiation from the anode contact by a factor equal to the difference between the anode button isoexposure-rate limit curve and the isoexposure-rate limit curve for the entire tube.

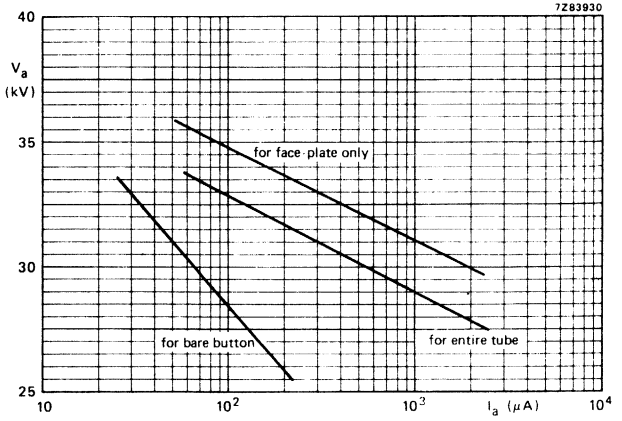

Fig. 17 0,5 mR/h isoexposure-rate limit curve.

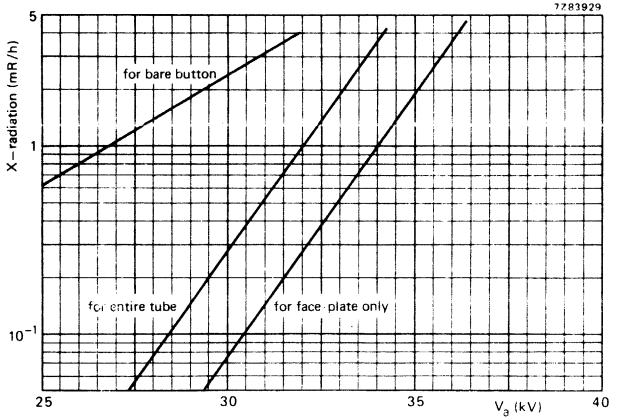

Fig. 18 X-radiation limit curve at a constant anode current of 300 μA.

WARNINGS

X-radiation

Operation of this colour display tube under abnormal conditions which exceed the 0,5 mR/h iso-dose rate curve shown on the preceding page may produce soft X-rays which may constitute a health hazard on prolonged exposure at close range unless adequate external screening is provided. Precautions must therefore be exercised during servicing of monitors using this tube to ensure that the anode voltage and other tube voltages are adjusted to the recommended values so that the 'Design maximum ratings' are not exceeded.

Replacement

This display tube incorporates integral X-radiation and implosion protection and must be replaced with a tube of the same type number or a recommended replacement to assure continued safety.

Shock hazard

The high voltage at which the tube is operated may be very dangerous. The monitor should include safeguards to prevent the user from coming in contact with the high voltage. Extreme care should be taken in servicing or adjustment of any high-voltage circuit.

Caution must be exercised during the replacement or servicing of the display tube since a residual electrical charge may be held by the high-voltage capacitor formed by the external and internal conductive coatings of the display tube funnel. To remove any residual charge, short the anode contact button, located in the funnel of the tube, to the external conductive coating before handling the tube. Discharging the high voltage to isolated metal parts such as cabinets and control brackets may produce a shock hazard.

Handling

Assemblies should be kept in the shipping box or similar protective container will just prior to installation. Wear heavy protective clothing, including gloves and safety goggles with side shields, in areas containing unpacked and unprotected tubes to prevent possible injury from flying glass in the event a tube breaks. Handle the tube with extreme care. Do not strike, scratch or subject the tube to more than moderate pressure. Particular care should be taken to prevent damage to the seal area.

The packing should incorporate sufficient cushioning so that under normal conditions of shipment or handling an impact acceleration of more than 35g is never applied to the tube.

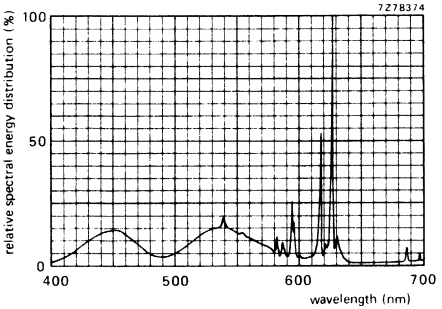

Fig. 19 Simultaneous excitation of red, green and blue phosphor, measured in a tube, to produce white of x = 0,281, y = 0,311. Exact shape of the peaks depends on the resolution of the measuring apparatus.

Colour co-ordinates:	x	y
red	0,635	0,340
green	0,315	0,600
blue	0,150	0,060

DEGAUSSING

The display tube has an internal magnetic shield. This shield and the shadow mask with its suspension system may be automatically degaussed by a coil mounted on the cone of the picture tube as shown in Fig. 20.

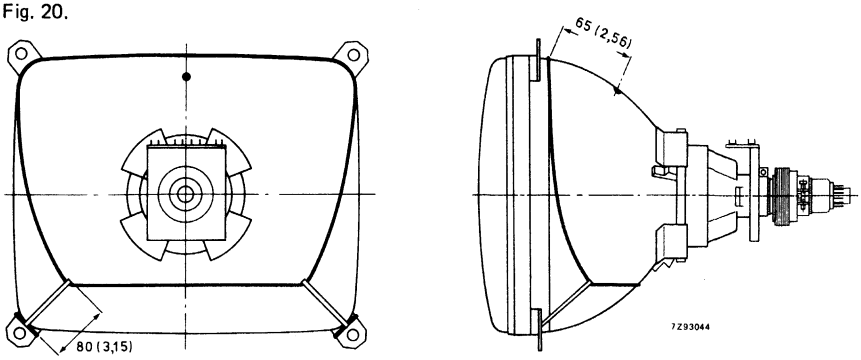

Fig. 20 Position of degaussing coil on the display tube; dimensions are given in mm, and in inches between brackets.

For proper degaussing an initial magnetomotive force (m.m.f.) of 600 ampere-turns is required in the coil. This m.m.f. has to be gradually decreased. In the steady state, no significant m.m.f. should remain in the coil ($\leqslant$ 0,6 ampere-turns).

If single-phase power rectification is used, provision should be included to prevent asymmetric distortion of the a.c. voltage applied to the degaussing circuit due to high d.c. inrush currents.

An example of a degaussing circuit and coil data for various mains voltages are given below.

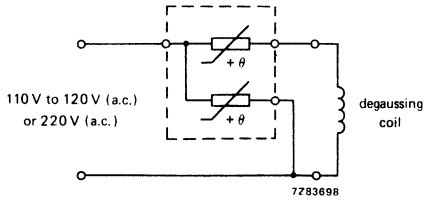

Fig. 21 Degaussing circuit using dual PTC thermistor.

Data of degaussing coil

	110 to 120 V (a.c.)	220 V (a.c.)
Circumference	90 cm (35,4 in)	90 cm (35,4 in)
Number of turns	70	120
Copper-wire diameter	0,45 mm (0,018 in)	0,3 mm (0,012 in)
Resistance	6,7 Ω	25,9 Ω
Catalogue number of dual PTC thermistor	8222 298 73091	2322 662 98009

CONVERGENCE AND RASTER SPECIFICATION

The maximum misconvergence after 15 min operation is given in Table 1.

Test conditions (all voltages are measured with respect to grid 1)

Heater voltage	V_f	6,3 V
Grid 2 voltage	V_{g2}	525 V
Grid 3 voltage	V_{g3}	to be adjusted for focus at screen centre, using cross-hatch pattern or characters H, at anode current of 300 μA (peak) per gun
Anode voltage	V_a	25 kV
Test pattern		cross-hatch pattern
Ambient temperature	T_{amb}	25 ± 5 °C

Notes

1. Misconvergence is the distance between centres of the red, green, blue lines at the screen using rectangular co-ordinates.
2. Anode and/or focusing voltage and terrestrial magnetism affect the static convergence performance.

Table 1 Maximum misconvergence after 15 min operation

location (see Fig. below)	type or error	max. error between any colour
centre	red-green-blue line separation in either the horizontal or vertical direction	0,3 mm
area A		0,5 mm
area B		0,8 mm

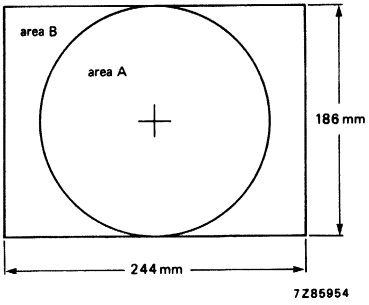

Fig. 22 Convergence test areas.

Raster centring

horizontal		max.	4 mm
vertical		max.	4 mm
Raster rotation		max.	0,4°

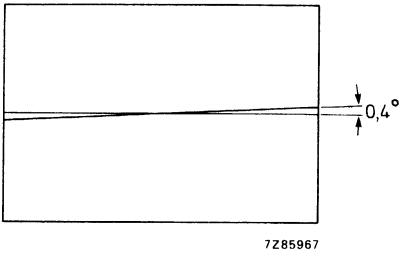

Fig. 23 Raster rotation.

Pattern distortion, measured without east-west and north-south correction

→ east-west	H	max.	3,0 mm
→ north-south	V	max.	2,1 mm

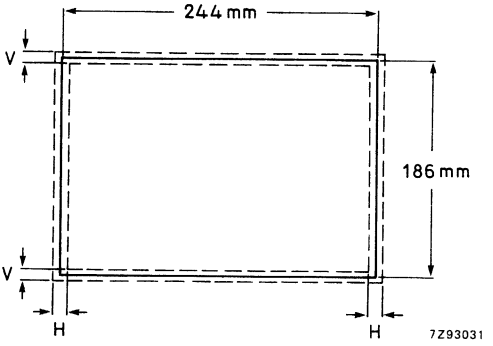

Fig. 24 Pattern distortion.

Argentina: PHILIPS ARGENTINA S.A., Div. Elcoma, Vedia 3892, 1430 BUENOS AIRES, Tel. 541-7141/7242/7343/7444/7545.
Australia: PHILIPS INDUSTRIES HOLDINGS LTD., Elcoma Division, 11 Waltham Street, ARTARMON, N.S.W. 2064, Tel. (02) 439 3322.
Austria: ÖSTERREICHISCHE PHILIPS BAUELEMENTE INDUSTRIE G.m.b.H., Triester Str. 64, A-1101 WIEN, Tel. 62911-0.
Belgium: N.V. PHILIPS & MBLE ASSOCIATED, 9 rue du Pavillon, B-1030 BRUXELLES, Tel. (02) 242 7400.
Brazil: IBRAPE, Caixa Postal 7383, Av. Brigadeiro Faria Lima, 1735 SAO PAULO, SP, Tel. (011) 211-2600.
Canada: PHILIPS ELECTRONICS LTD., Elcoma Division, 601 Milner Ave., SCARBOROUGH, Ontario, M1B 1M8, Tel. 292-5161.
Chile: PHILIPS CHILENA S.A., Av. Santa Maria 0760, SANTIAGO, Tel. 39-4001.
Colombia: IND. PHILIPS DE COLOMBIA S.A., c/o IPRELENSO LTD., Cra. 21, No. 56-17, BOGOTA, D.E., Tel. 249 7624.
Denmark: MINIWATT A/S, Strandlodsvej 2, P.O. Box 1919, DK 2300 COPENHAGEN S, Tel. (01) 54 11 33.
Finland: OY PHILIPS AB, Elcoma Division, Kaivokatu 8, SF-00100 HELSINKI 10, Tel. 172 71.
France: RTC-COMPELEC, 130 Avenue Ledru Rollin, F-75540 PARIS 11, Tel. 43 38 80 00.
Germany (Fed. Republic): VALVO, UB Bauelemente der Philips G.m.b.H., Valvo Haus, Burchardstrasse 19, D-2 HAMBURG 1, Tel. (040) 3296-0.
Greece: PHILIPS HELLENIQUE S.A., Elcoma Division, 54, Syngru Av., ATHENS 11742, Tel. 9215311/319.
Hong Kong: PHILIPS HONG KONG LTD., Elcoma Div., 15/F Philips Ind. Bldg., 24-28 Kung Yip St., KWAI CHUNG, Tel. (0)-24 51 21.
India: PEICO ELECTRONICS & ELECTRICALS LTD., Elcoma Dept., Band Box Building,
254-D Dr. Annie Besant Rd., BOMBAY - 400 025, Tel. 4930311/4930590.
Indonesia: P.T. PHILIPS-RALIN ELECTRONICS, Elcoma Div., Setiabudi II Building, 6th Fl., Jalan H.R. Rasuna Said (P.O. Box 223/KBY) Kuningan,
JAKARTA – Selatan, Tel. 512 572.
Ireland: PHILIPS ELECTRICAL (IRELAND) LTD., Newstead, Clonskeagh, DUBLIN 14, Tel. 693 355.
Italy: PHILIPS S.p.A., Sezione Elcoma, Piazza IV Novembre 3, I-20124 MILANO, Tel. 2-6752.1.
Japan: NIHON PHILIPS CORP., Shuwa Shinagawa Bldg., 26-33 Takanawa 3-chome, Minato-ku, TOKYO (108), Tel. 448-5611.
(IC Products) SIGNETICS JAPAN LTD., 8-7 Sanbancho Chiyoda-ku, TOKYO 102, Tel. (03) 230-1521.
Korea (Republic of): PHILIPS ELECTRONICS (KOREA) LTD., Elcoma Div., Philips House, 260-199 Itaewon-dong, Yongsan-ku, SEOUL, Tel. 794-5011.
Malaysia: PHILIPS MALAYSIA SDN. BERHAD, No. 4 Persiaran Barat, Petaling Jaya, P.O.B. 2163, KUALA LUMPUR, Selangor, Tel. 774411.
Mexico: ELECTRONICA, S.A de C.V., Carr. México-Toluca km. 62.5, TOLUCA, Edo. de México 50140, Tel. Toluca 91 (721) 613-00.
Netherlands: PHILIPS NEDERLAND, Marktgroep Elonco, Postbus 90050, 5600 PB EINDHOVEN, Tel. (040) 793333.
New Zealand: PHILIPS NEW ZEALAND LTD., Elcoma Division, 110 Mt. Eden Road, C.P.O. Box 1041, AUCKLAND, Tel. 605-914.
Norway: NORSK A/S PHILIPS, Electronica Dept., Sandstuveien 70, OSLO 6, Tel. 68 02 00.
Peru: CADESA, Av. Alfonso Ugarte 1268, LIMA 5, Tel. 326070.
Philippines: PHILIPS INDUSTRIAL DEV. INC., 2246 Pasong Tamo, P.O. Box 911, Makati Comm. Centre, MAKATI-RIZAL 3116, Tel. 86-89-51 to 59.
Portugal: PHILIPS PORTUGUESA S.A.R.L., Av. Eng. Duarte Pacheco 6, 1009 LISBOA Codex, Tel. 68 31 21.
Singapore: PHILIPS PROJECT DEV. (Singapore) PTE LTD., Elcoma Div., Lorong 1, Toa Payoh, SINGAPORE 1231, Tel. 350 2000.
South Africa: EDAC (PTY.) LTD., 3rd Floor Rainer House, Upper Railway Rd. & Ove St., New Doornfontein, JOHANNESBURG 2001, Tel. 614-2362/9.
Spain: MINIWATT S.A., Balmes 22, BARCELONA 7, Tel. 301 63 12.
Sweden: PHILIPS KOMPONENTER A.B., Lidingövägen 50, S-11584 STOCKHOLM 27, Tel. 08/7821000.
Switzerland: PHILIPS A.G., Elcoma Dept., Allmendstrasse 140-142, CH-8027 ZÜRICH, Tel. 01-488 22 11.
Taiwan: PHILIPS TAIWAN LTD., 150 Tun Hua North Road, P.O. Box 22978, TAIPEI, Taiwan, Tel. 7120500.
Thailand: PHILIPS ELECTRICAL CO. OF THAILAND LTD., 283 Silom Road, P.O. Box 961, BANGKOK, Tel. 233-6330-9.
Turkey: TÜRK PHILIPS TICARET A.S., Elcoma Department, Inönü Cad, No. 78-80, P.K.504, 80074 ISTANBUL, Tel. 435 9 10.
United Kingdom: MULLARD LTD., Mullard House, Torrington Place, LONDON WC1E 7HD, Tel. 01-580 6633.
United States: (Active Devices & Materials) AMPEREX SALES CORP., Providence Pike, SLATERSVILLE, R.I. 02876, Tel. (401) 762-9000.
(Passive Devices) MEPCO/ELECTRA INC., Columbia Rd., MORRISTOWN, N.J. 07960, Tel. (201) 539-2000.
(Passive Devices & Electromechanical Devices) CENTRALAB INC., 5855 N. Glen Park Rd., MILWAUKEE, WI 53201, Tel. (414)228-7380.
(IC Products) SIGNETICS CORPORATION, 811 East Arques Avenue, SUNNYVALE, California 94086, Tel. (408) 991-2000.
Uruguay: LUZILECTRON S.A., Avda Uruguay 1287, P.O. Box 907, MONTEVIDEO, Tel. 914321.
Venezuela: IND. VENEZOLANAS PHILIPS S.A., c/o MAGNETICA S.A., Calle 6, Ed. Las Tres Jotas, App. Post. 78117, CARACAS, Tel. (02) 239 39 31.

For all other countries apply to: Philips Electronic Components and Materials Division, International Business Relations, P.O. Box 218, 5600 MD EINDHOVEN, The Netherlands, Telex 35000 phtcnl

AS52

© Philips Export B.V. 1986

This information is furnished for guidance, and with no guarantee as to its accuracy or completeness; its publication conveys no licence under any patent or other right, nor does the publisher assume liability for any consequence of its use; specifications and availability of goods mentioned in it are subject to change without notice; it is not to be reproduced in any way, in whole or in part, without the written consent of the publisher.

Printed in The Netherlands

9398 142 40011