DISPLAY COMPONENTS

DATA HANDBOOK

Colour TV Picture Tubes and Assemblies

Colour Monitor Tube Assemblies

BOOK DC01 1989

Philips Components

PHILIPS

COLOUR DISPLAY SYSTEMS

page

Introduction

Guide for the use of the 1989 handbook 5

Selection guide

Colour picture tubes and assemblies 8
Colour picture tube assemblies and deflection units 18
Colour monitor tube assemblies 24
Colour monitor tube assemblies and deflection units 26

General

List of symbols 29
General operational recommendations 31
Type designation 37
Kelly chart 39

Device specifications

Colour TV picture tubes and assemblies 41
Colour TV picture tubes and deflection units – maintenance types 421
Colour monitor tube assemblies 477

INTRODUCTION

INTRODUCTION

GUIDE FOR THE USE OF THE 1989 HANDBOOK

The 1989 DC01 handbook (previously known as T8) differs significantly from previous issues. The Selection Guide following this introduction provides a complete list of all the preferred tube types and assemblies that are currently available, together with quick-reference data for each tube type and deflection unit. However, the Device Specifications sections only provide data for basic families of tube types and tube assemblies. At the front of each Device Specification section is a list of types for which full data is provided.

SELECTION GUIDE

COLOUR PICTURE TUBES AND ASSEMBLIES

TUBE DATA							
tube type designation	tube size	defl. angle	neck dia. meter mm	minimum useful screen diag. mm	glass trans-mission	overall length (max.) mm	base
A34EAC00X . .	14"	90°	22.5	335	68%	339	B8–288
A34EAC01X . .	14"	90°	22.5	335	46%	339	B8–288
A37–573X0510	14"	90°	29.1	335.4	68%	342.4	B12- 262
A37–590X	14"	90°	29.1	335.4	68%	347.1	B10- 277
A37–591X	14"	90°	29.1	335.4	68%	351.5	B8–274
A37–598X	14"	90°	29.1	335.4	68%	347.1	B10–277
A37–599X	14"	90°	29.1	335.4	46%	347.1	B10–277

TUBE DATA						
TYPICAL OPERATING CONDITIONS					Va/Ia (max.)	AVAILABLE ASSEMBLIES
Vf/If V/mA	Va kV	Vg3 (% of Va)	Vg2 V	Vcut-off V	kV/μA	
6.3/300	23	28%	310–600	120	27.5/1000	A34EAC . . X02 A34EAC . . X03 A34EAC . . X04 A34EAC . . X05 A34EAC . . X06 A34EAC . . X10 A34EAC . . X12 A34EAC . . X17 A34EAC . . X70
6.3/300	23	28%	310–600	120	27.5/1000	
6.3/685	25	20%	350–625	130	27.5/1000	A37–573X0510
6.3/685	25	28%	420–830	150	27.5/1000	A37–59.X0620 A37–59.X0621
6.3/685	25	28%	420–830	150	27.5/1000	
6.3/685	25	28%	420–830	150	27.5/1000	A37–59.X0620
6.3/685	25	28%	420–830	150	27.5/1000	

TUBE DATA							
tube type designation	tube size	defl. angle	neck dia-meter mm	minimum useful screen diag. mm	glass trans-mission	overall length (max.) mm	base
A38EAC00X . .	16″	90°	22.5	382	67%	371	B8–288
A38EAC01X . .	16″	90°	22.5	382	45%	371	B8–288
A42–570X1500	16″	90°	29.1	382.3	66.8%	373.4	B12–262
A42–592X	16″	90°	29.1	382.3	66.8%	378.6	B10–277
A42–593X	16″	90°	29.1	382.3	66.8%	383	B10–277
A48EAC00X . .	20″	90°	22.5	480	64%	432	B8–288
A48EAC02X . .	20″	90°	22.5	480	52%	432	B8–288
A51–570X	20″	90°	29.1	480	64%	429	B12–262

TUBE DATA						
TYPICAL OPERATING CONDITIONS					Va/Ia (max.)	AVAILABLE ASSEMBLIES
Vf/If V/mA	Va kV	Vg3 (% of Va)	Vg2 V	Vcut-off V	kV/μA	
6.3/300	23	28%	310–600	120	27.5/1000	A38EAC . . X01
6.3/300	23	28%	310–600	120	27.5/1000	A38EAC . . X03
						A38EAC . . X04
						A38EAC . . X05
						A38EAC . . X10
6.3/685	25	20%	310–560	120	27.5/1000	A42–570X1500
6.3/685	25	28%	420–830	150	27.5/1000	A42–59.X1620
6.3/685	25	28%	420–830	150	27.5/1000	A42–59.X1625
						A42–59.X7021
						A42–59.X7025
6.3/300	25	31%	310–650	120	27.5/1500	A48EAC . . X01
6.3/300	25	31%	310–650	120	27.5/1500	A48EAC . . X03
						A48EAC . . X04
6.3/685	25	20%	310–560	120	27.5/1500	A51–570X3750
						A51–570X3801
						A51–570X3810
						A51–570X3840
						A51–570X3850

TUBE DATA							
tube type designation	tube size	defl. angle	neck diameter mm	minimum useful screen diag. mm	glass transmission	overall length (max.) mm	base
A51–590X	20″	90°	29.1	480	64%	436.4	B10–277
A51–591X	20″	90°	29.1	480	64%	441	B10–277

FLAT SQUARE COLOUR PICTURE TUBES AND ASSEMBLIES

A36EAM00X . .	36 cm	90°	22.5	356	65%	345	B8- 288
A36EAM01X . .	36 cm	90°	22.5	356	45%	345	B8–288
A41EAM00X . .	41 cm	90°	22.5	406	64%	374	B8–288
A41EAM01X . .	41 cm	90°	22.5	406	42%	374	B8–288
A51EAM30X . .	51 cm	90°	22.5	508	64%	435	B8–288
A51EAM31X . .	51 cm	90°	22.5	508	52%	435	B8–288

TUBE DATA						
TYPICAL OPERATING CONDITIONS					Va/Ia (max.)	AVAILABLE ASSEMBLIES
Vf/If V/mA	Va kV	Vg3 (% of Va)	Vg2 V	Vcut-off V	kV/μA	
6.3/685	25	28%	420–830	150	27.5/1500	A51–59.X3620
6.3/685	25	28%	420–830	150	27.5/1500	A51–59.X3623
						A51–59.X3625
						A51–59.X3930
						A51–59.X8020
6.3/300	23	31%	310–650	120	27.5/1000	A36EAM . . X01
6.3/300	23	31%	310–650	120	27.5/1000	A36EAM . . X03
						A36EAM . . X04
						A36EAM . . X16
6.3/300	23	31%	310–650	120	27.5/1000	A41EAM . . X01
6.3/300	23	31%	310–650	120	27.5/1000	A41EAM . . X03
						A41EAM . . X04
						A41EAM . . X16
6.3/310	25	31%	310–650	120	27.5/1500	A51EAM . . X01
6.3/310	25	31%	310–650	120	27.5/1500	A51EAM . . X16

TUBE DATA							
tube type designation	tube size	defl. angle	neck diameter mm	minimum useful screen diag. mm	glass transmission	overall length (max.) mm	base
A51EAL00X..	51 cm	90°	29.1	508	64%	448.7	B10–277
A51EAL10X..	51 cm	90°	29.1	508	64%	453.3	B8–274
A51EAL11X..	51 cm	90°	29.1	508	52%	453.3	B8–274
A51EAL20X..	51 cm	90°	29.1	508	64%	448.7	B10–277
A51EAL30X..	51 cm	90°	29.1	508	52%	448.7	B10–277
A51EAL40X..	51 cm	90°	29.1	508	52%	448.7	B10–277
A51EAL50X..	51 cm	90°	29.1	508	40%	448.7	B10–277
A51EAL60X..	51 cm	90°	29.1	508	57%	448.7	B10–277

All tubes listed below have a neck diameter of 29.1 mm, and JEDEC base B10–277

TUBE DATA						
tube type designation	TV lines	defl. angle	minimum useful screen diag. mm	glass transmission	overall length (max.) mm	remarks
A51EAK01X..	625	110°	508	52%	368	Invar mask

TUBE DATA					
TYPICAL OPERATING CONDITIONS					Va/Ia (max.)
Vf/If V/mA	Va kV	Vg3 (% of Va)	Vg2 V	Vcut-off V	kV/μA
6.3/310	25	31%	575–825	130	27.5/1500
6.3/310	25	31%	575–825	130	27.5/1500
6.3/310	25	31%	575–825	130	27.5/1500
6.3/310	25	31%	575–825	130	27.5/1500
6.3/310	25	31%	575–825	130	27.5/1500
6.3/310	25	31%	575–825	130	27.5/1500
6.3/310	25	31%	575–825	130	27.5/1500

AVAILABLE ASSEMBLIES

- A51EAL . . X01
- A51EAL . . X02
- A51EAL . . X03
- A51EAL . . X05
- A51EAL . . X11
- A51EAL . . X30

TUBE DATA					
TYPICAL OPERATING CONDITIONS					Va/Ia (max.)
Vf/If V/mA	Va kV	Vg3 (% of Va)	Vg2 V	Vcut-off V	kV/μA
6.3/310	25	31%	575–825	130	27.5/1500

AVAILABLE ASSEMBLIES

- A51EAK . . X01
- A51EAK . . X02
- A51EAK . . X03
- A51EAK . . X04
- A51EAK . . X05

TUBE DATA						
tube type designation	TV lines	defl. angle	minimum useful screen diag. mm	glass trans-mission	overall length (max.) mm	remarks
A59EAK00X . .	625	110°	590	67%	398	
A59EAK01X . .	625	110°	590	53%	398	
A59EAK10X . .	625	110°	590	67%	398	S. Hemisphere
A59EAK11X . .	625	110°	590	53%	398	S. Hemisphere
A66EAK50X . .	625	110°	660	65%	428	
A66EAK51X . .	625	110°	660	50%	428	
A66EAK55X . .	525	110°	660	65%	428	
A66EAK56X . .	525	110°	660	50%	428	
A66EAK60X . .	625	110°	660	65%	428	S. Hemisphere
A66EAK61X . .	625	110°	660	50%	428	S. Hemisphere
A66EAK65X . .	525	110°	660	65%	428	S. Hemisphere
A66EAK66X . .	525	110°	660	50%	428	S. Hemisphere
M78JUA98X . .	525/625	110°	784	47.5%	498	
A78EBK03X . .	525/625	110°	784	47.5%	498	I-cathode

All tubes listed above have a neck diameter of 29.1 mm, and JEDEC base B10–277

TUBE DATA						
TYPICAL OPERATING CONDITIONS						Va/Ia (max.)
Vf/If V/mA	Va kV	Vg3 (% of Va)	Vg2 V	Vcut-off V		kV/μA
6.3/310	25	31%	575–825	130		27.5/1500
6.3/310	25	31%	575–825	130		27.5/1500
6.3/310	25	31%	575–825	130		27.5/1500
6.3/310	25	31%	575–825	130		27.5/1500
6.3/310	25	31%	575–825	130		27.5/1500
6.3/310	25	31%	575–825	130		27.5/1500
6.3/310	25	31%	575–825	130		27.5/1500
6.3/310	25	31%	575–825	130		27.5/1500
6.3/310	25	31%	575–825	130		27.5/1500
6.3/310	25	31%	575–825	130		27.5/1500
6.3/310	25	31%	575–825	130		27.5/1500
6.3/310	25	31%	575–825	130		27.5/1500
6.3/630	27.5	27.2%	425–885	160		29.9/1500
6.3/575	27.5	27.2%	780–1200	160		29.9/1800

AVAILABLE ASSEMBLIES
A59EAK . . X01
A59EAK . . X02
A59EAK . . X03
A59EAK . . X04
A66EAK . . X01
A66EAK . . X02
A66EAK . . X03
A66EAK . . X04
A66EAK . . X32
M78JUA98X01
M78JUA98X32
A78EBK03X01
A78EBK03X32

COLOUR PICTURE TUBE ASSEMBLIES AND DEFLECTION UNITS

ASSEMBLY	DEFLECTION COIL DATA							REMARKS
	COIL TYPE	line coil			field coil			
		inductance mH	resistance Ω	current A(p-p)	inductance mH	resistance Ω	current A(p-p)	
A34EAC . . X02	AT1625/10	2.43	3.3	2.17	110	54	0.375	incl. loss coil, 0.15 mH
A34EAC . . X03	AT1625/20	2.47	3.3	2.17	27.5	14	0.750	incl. loss coil, 0.19 mH
A34EAC . . X04	AT1625/30	2.50	3.3	2.07	110	54	0.375	
A34EAC . . X05	AT1625/21	2.28	3.2	2.17	27.5	14	0.750	
A34EAC . . X06	AT1625/31	2.50	3.3	2.07	27.5	14	0.750	
A34EAC . . X10	AT1625/22	2.53	3.3	2.17	27.5	14	0.750	incl. loss coil, 0.25 mH
A34EAC . . X12	AT1625/41	2.74	3.9	1.98	27.5	14	0.750	
A34EAC . . X17	AT1625/32	2.65	3.4	2.07	27.5	14	0.750	incl. loss coil, 0.15 mH
A34EAC . . X70	AT1625/70	1.64	2.1	2.56	110	54	0.375	WTB-2 connectors
A37–573X0510	AT1205/10	1.85	2.0	3.00	109	50	0.420	
A37–59.X0620	AT1206/20	1.78	1.8	3.21	29.1	11	0.970	
A37–59.X0621	AT1206/21	1.78	1.8	3.19	29.1	11	0.970	

A38EAC . . X01	AT1635/00	2.50	3.3	2.07	27.5	12	0.780	
A38EAC . . X03	AT1635/20	2.50	3.3	2.22	27.5	12	0.780	incl. loss coil, 0.31 mH
A38EAC . . X04	AT1635/30	2.50	3.3	2.07	110	47	0.390	
A38EAC . . X05	AT1635/21	2.19	3.1	2.22	27.5	12	0.780	
A38EAC . . X10	AT1635/22	2.54	12	2.22	27.5	12	0.780	incl. loss coil, 0.36 mH

A42–570X1500	AT1215/00	2.30	2.2	2.75	23.0	12	0.870	

A42–59.X1620	AT1216/20	1.73	1.8	3.28	29.1	11	0.940	RC network across line coils 680 Ω/680 pF
A42–59.X1625	AT1216/25	1.73	1.8	3.28	116.4	44	0.470	
A42–59.X7021	AT1470/21	1.89	2.6	3.04	29.5	14	0.900	
A42–59.X7025	AT1470/25	1.89	2.6	3.04	116	56	0.450	

A48EAC . . X01	AT1645/00	2.50	3.3	2.23	27.5	12	0.806	
A48EAC . . X03	AT1645/20	2.34	3.2	2.38	27.5	12	0.806	incl. loss coil, 0.15 mH
A48EAC . . X04	AT1645/30	2.50	3.3	2.23	110	47	0.403	

ASSEMBLY	DEFLECTION COIL DATA							REMARKS
	COIL TYPE	line coil			field coil			
		inductance mH	resistance Ω	current A(p-p)	inductance mH	resistance Ω	current A(p-p)	
A51–570X3750	AT1237/50	1.66	1.9	3.25	114	60	0.400	
A51–570X3801	AT1238/01	2.30	2.2	2.75	22.0	12	0.900	
A51–570X3810	AT1238/10	1.76	1.9	3.15	24.0	12	0.880	
A51–570X3840	AT1238/40	1.66	1.9	3.25	28.5	15	0.800	
A51–570X3850	AT1238/50	1.66	1.7	3.25	114	60	0.400	
A51–59.X3620	AT1236/20	1.88	1.9	3.04	27.6	13	0.895	
A51–59.X3623	AT1236/23	2.07	2.1	3.04	27.6	13	0.895	incl. loss coil, 0.19 mH
A51–59.X3625	AT1236/25	1.88	1.9	3.04	110.4	53	0.447	
A51–59.X3930	AT1239/30	1.70	1.8	3.23	29.0	14	0.865	RC network across line coils 680 Ω/680 pF
A51–59.X8020	AT1480/20	1.90	2.2	3.10	29.0	14	0.860	
A36EAM . . X01	AT6060/00	2.43	3.2	2.10	26.2	12	0.820	
A36EAM . . X03	AT6060/03	2.43	3.2	2.10	26.2	12	0.820	WTB-2 connectors
A36EAM . . X04	AT6060/30	2.43	3.2	2.10	108	50	0.407	
A36EAM . . X16	AT6060/42	1.64	2.2	2.56	108	50	0.407	WTB-2 connectors

A41EAM . . X01	AT6050/00	2.43	3.2	2.10	26.2	12	0.820	
A41EAM . . X03	AT6050/03	2.43	3.2	2.10	26.2	12	0.820	WTB-2 connectors
A41EAM . . X04	AT6050/30	2.43	3.2	2.10	108	50	0.407	
A41EAM . . X16	AT6050/42	1.64	2.2	2.56	108	50	0.407	WTB-2 connectors

A51EAM . . X01	AT6040/00	2.37	3.2	2.26	22.5	11	0.950	
A51EAM . . X16	AT6040/42	1.64	2.3	2.71	108	50	0.430	WTB-2 connectors

A51EAL . . X01	AT6035/04	2.00	2.3	2.85	19.5	9.7	1.09	WTB-2 connectors
A51EAL . . X02	AT6035/02	2.00	2.3	2.85	19.5	9.7	1.09	6 pin connector
A51EAL . . X03	AT6035/03	2.00	2.3	2.85	19.5	9.7	1.09	WTB-2 connectors
A51EAL . . X05	AT6035/05	1.13	1.4	3.78	78.0	40	0.540	WTB-2 connectors
A51EAL . . X11	AT6035/11	1.70	2.0	3.09	19.5	9.7	1.09	6 pin connector
A51EAL . . X30	AT6035/30	2.00	2.3	2.85	78.0	39	0.540	6 pin connector

A51EAK01X01	AT6020/00	2.03	2.0	3.88	11.7	6.0	1.77	6 pin connector
A51EAK01X02	AT6020/00	2.03	2.0	3.88	11.7	6.0	1.77	6 pin connector in South
A51EAK01X03	AT6020/10	2.03	2.0	3.88	11.7	6.0	1.77	WTB-2 connectors
A51EAK01X04	AT6020/15	2.03	2.0	3.90	107	51	0.590	6 pin connector
A51EAK01X05	AT6020/20	1.84	1.9	4.04	11.8	5.9	1.75	6 pin connector

ASSEMBLY	DEFLECTION COIL DATA							REMARKS
	COIL TYPE	line coil			field coil			
		inductance mH	resistance Ω	current A(p-p)	inductance mH	resistance Ω	current A(p-p)	
A59EAK . . X01	AT6010/00	1.85	1.8	4.10	11.1	6.3	1.65	6 pin connector
A59EAK . . X02	AT6010/00	1.85	1.8	4.10	11.1	6.3	1.65	6 pin connector in South
A59EAK . . X03	AT6010/10	1.85	1.8	4.10	11.1	6.3	1.65	WTB-2 connectors
A59EAK . . X04	AT6010/15	1.85	1.8	4.10	100	56	0.550	
A66EAK . . X01	AT6005/00	1.84	1.8	4.23	10.7	6.2	1.76	6 pin connector
A66EAK . . X02	AT6005/00	1.84	1.8	4.23	10.7	6.2	1.76	6 pin connector in South
A66EAK . . X03	AT6005/10	1.84	1.8	4.23	10.7	6.2	1.76	WTB-2 connectors
A66EAK . . X04	AT6005/15	1.84	1.8	4.23	96.0	55	0.590	
A66EAK . . X32	AT6006/00	0.430	0.59	8.92	6.50	3.9	2.25	
M78JUA98X01	KY7496M1	1.50	2.1	4.90	12.8	6.4	1.71	
M78JUA98X32	KY8403M1	0.350	0.54	10.2	7.50	3.4	2.24	
A78EBK03X01	KY7496M1	1.50	2.1	4.90	12.8	6.4	1.71	
A78EBK03X32	KY8403M1	0.350	0.54	10.2	7.50	3.4	2.24	

SELECTION GUIDE COLOUR MONITOR TUBES

COLOUR MONITOR TUBE ASSEMBLIES

TUBE DATA							
tube type designation	tube size	defl. angle	neck diameter mm	overall length (max.) mm	glass transmission	horizontal pitch mm	resolution* h x v
M34EAQ00X	14"	90	29.1	346.6	46%	0.42	480 x 360
M34EAQ10X	14"	90	29.1	346.6	46%	0.42	480 x 360
M37–103X	14"	90	29.1	358.7	86%	0.29	870 x 610
M37–108X	14"	90	29.1	358.7	57%	0.29	870 x 610
M37–118X	14"	90	29.1	358.7	46%	0.29	870 x 610

* Values given for resolution are measured under the following conditions:

- V_a = 25 kV, V_k = 100 V;
- V_{g3} adjusted for minimum width vertical white lines at half East, or half West zone;
- I_a = 200 μA per gun;
- modulation depth of −12 dB;
- sine-wave drive voltage;
- raster scan of 240 mm x 180 mm.

TUBE DATA						
TYPICAL OPERATING CONDITIONS					Va/Ia (max.)	PREFERRED ASSEMBLIES
Vf/If V/mA	Va kV	Vg3 (% of Va)	Vg2 V	Vcut-off V	kV/µA	
6.3/685	25	28%	390–760	140	27.5/600	M34EAQ . . X01
6.3/685	25	28%	390–760	140	27.5/600	M34EAQ . . X11
6.3/673	25	26%	300–800	105	27.5/600	M37– . . . X/1120
6.3/673	25	26%	300–800	105	27.5/600	M37– . . . X/1130
6.3/673	25	26%	300–800	105	27.5/600	M37– . . . X/1140

COLOUR MONITOR TUBE ASSEMBLIES AND DEFLECTION UNITS

ASSEMBLY	DEFLECTION COIL DATA							REMARKS
	COIL TYPE	line coil			field coil			
		inductance mH	resistance Ω	current A(p-p)	inductance mH	resistance Ω	current A(p-p)	
M34EAQ . . X01	AT1201/01	1.89	2.0	3.00	29.0	13	0.830	field, parallel connected
M34EAQ . . X11	AT1201/11	1.89	2.0	3.00	116	54	0.410	field, series connected
M37– . . . X/1120	AT1511/20	1.20	1.5	3.62	6.50	5.7	1.36	
M37– . . . X/1130	AT1511/30	0.640	0.80	5.12	6.50	5.7	1.36	
M37– . . . X/1140	AT1511/40	0.310	0.40	7.24	6.50	5.7	1.36	

GENERAL

LIST OF SYMBOLS

Symbols denoting electrodes/elements and electrode/element connections

f	Heater
k	Cathode
g	Grid: Grids are distinguished by means of an additional numeral; the electrode nearest to the cathode having the lowest number.
a	Anode
m	External conductive coating
m'	Rimband
ℓ	Fluorescent screen
i.c.	Tube pin which must not be connected externally
n.c.	Tube pin which may be connected externally

Symbols denoting voltages

Unless otherwise stated, the reference point for electrode voltages is the cathode.

V	Symbol for voltage, followed by a subscript denoting the relevant electrode/element
V_f	Heater voltage
$V_{p\text{-}p}$	Peak-to-peak value of a voltage
V_p	Peak value of a voltage
V_{GR}	Grid 1 voltage for visual extinction of focused raster (grid drive service)
V_{KR}	Cathode voltage for visual extinction of focused raster (cathode drive service)

Symbols denoting currents

I	Symbol for current followed by a subscript denoting the relevant electrode
I_f	Heater current (RMS value)

Note: The symbols quoted represent the average value of the current, unless otherwise stated.

Symbols denoting capacitances

See IEC publication 100

Symbols denoting resistances and impedances

R	Symbol for resistance followed by a subscript for the relevant electrode pair. When only one subscript is given the second electrode is the cathode.
Z	Symbol for impedance followed by a subscript for the relevant electrode pair. When only one subscript is given the second electrode is the cathode.

Symbols denoting various quantities

L	Luminance
f	Frequency
H	Magnetic field strength

GENERAL OPERATIONAL RECOMMENDATIONS

INTRODUCTION

Equipment design should be based on the characteristics as stated in the data sheets. Where deviations from these general recommendations are permissible or necessary, statements to that effect will be made.

If applications are considered which are not referred to in the data sheets of the relevant tube type, extra care should be taken with circuit design to prevent the tube being overloaded due to unfavourable operating conditions.

SPREAD IN TUBE CHARACTERISTICS

The spread in tube characteristics is the difference between maximum and minimum values. Values not qualified as maximum or minimum are nominal ones. It is evident that average or nominal values, as well as spread figures, may differ according to the number of tubes of a certain type that are being checked. No guarantee is given for values of characteristics in settings substantially differing from those specified in the data sheets.

SPREAD AND VARIATION IN OPERATING CONDITIONS

The operating conditions of a tube are subject to spread and/or variation.

Spread in an operating condition is a **permanent** deviation from an average condition due to, e.g., component value deviations. The average condition is found from such a number individual cases taken at random that an increase of the number will have a negligible influence.

Variation in an operating condition is **non-permanent** (occurs as a function of time), e.g., due to supply voltage fluctuations. The average value is calculated over a period such that a prolongation of that period will have negligible influence.

LIMITING VALUES

Limiting values are in accordance with the applicable rating system as defined by IEC publication 134. Reference may be made to one of the following 3 rating systems.

Absolute maximum rating system. Absolute maximum ratings are limiting values of operating and environmental conditions applicable to any electronic device of a specified type as defined by its published data, and should not be exceeded under the worst probable conditions.
These values are chosen by the device manufacturer to provide acceptable serviceability of the device, taking no responsibility for equipment variations, environmental variations, and the effects of changes in operating conditions due to variations in the characteristics of the device under consideration and of all other electronic devices in the equipment.

The equipment manufacturer should design so that, initially and throughout life, no absolute maximum value for the intended service is exceeded with any device under the worst probable operating conditions with respect to supply voltage variation, equipment components spread and variation, equipment control adjustment, load variations, signal variation, environmental conditions, and spread or variations in characteristics of the device under considerations and of all other electronic devices in the equipment.

Design-maximum rating system. Design-maximum ratings are limiting values of operating and environmental conditions applicable to a bogey electronic device* of a specified type as defined by its published data, and should not be exceeded under the worst probable conditions.

These values are chosen by the device manufacturer to provide acceptable serviceability of the device, taking responsibility for the effects of changes in operating conditions due to variations in the characteristics of the electronic device under consideration.

The equipment manufacturer should design so that, initially and thoughout life, no design-maximum value for the intended service is exceeded with a bogey device under the worst probable operating conditions with respect to supply-voltage variation, equipment component variation, variation in characteristics of all other devices in the equipment, equipment control adjustment, load variation, signal variation and environmental conditions.

Design-centre rating system. Design-centre ratings are limiting values of operating and environmental conditions applicable to a bogey electronic device* of a specified type as defined by its published data, and should not be exceeded under average conditions.

These values are chosen by the device manufacturer to provide acceptable serviceability of the device in average applications, taking responsibility for normal changes in operating conditions due to rated supply-voltage variation, equipment component spread and variation, equipment control adjustment, load variation, signal variation, environmental conditions, and variations or spread in the characteristics of all electronic devices.

The equipment manufacturer should design so that, initially, no design-centre value for the intended service is exceeded with a bogey electronic device* in equipment operating at the stated normal supply voltage.
If the tube data specify limiting values according to more than one rating system the circuit has to be designed so that none of these limiting values is exceeded under the relevant conditions.

The expressions 'long-term' and 'short-term' are used to denote either the maximum time-averaged beam current for one gun to limit the cathode loading, or the maximum time-averaged anode current for three guns to limit the screen loading.

'Short-term' is not related to a specific period of time, but can be interpreted as the condition where the content and intensity of the displayed image vary continuously, as during live television pictures.

'Long-term' means that the image is stationary for an indefinite period of time, as during the display of test pictures, computer images, teletext data or stationary television scenes lasting longer than 30 seconds.

In addition to the limiting values given in the individual data sheets the directives in the following paragraphs should be observed.

* A bogey tube is a tube whose characteristics have the published nominal values for the type. A bogey tube for any particular application can be obtained by considering only those characteristics which are directly related to the application.

HEATER SUPPLY

For maximum cathode life and optimum performance it is recommended that the heater supply be designed at the nominal heater voltage at zero beam current. Any deviation from this heater voltage has a detrimental effect on tube performance and life, and should therefore be kept to a minimum. In any case the deviations of the heater voltage must not exceed + 5% and −10% from the nominal value at zero beam current. Such deviations may be caused by:

- mains voltage fluctuations;
- spread in the characteristics of components such as transformers, resistors, capacitors, etc.;
- spread in circuit adjustments;
- operational variations.

CATHODE TO HEATER VOLTAGE

The voltage between cathode and heater should be as low as possible and never exceed the limiting values given in the data sheets of the individual tubes. The limiting values relate to that side of the heater where the voltage between cathode and heater is greatest. The voltage between cathode and heater may be DC, AC or a combination of both. Unless otherwise stated, the maximum values quoted indicate the maximum permissible DC voltage. If a combination of DC and AC voltages is applied, the peak value may be twice the rated V_{kf}; however, unless otherwise stated, this peak value shall never exceed 315 V. Unless otherwise stated, the V_{kf} max. holds for both polarities of the voltage; however, a positive cathode is usually the most favourable in view of insulation during life.

A DC connection should always be present between heater and cathode. Unless otherwise specified the maximum resistance should not exceed 1 MΩ; the maximum impedance at mains frequency should less than 100 kΩ.

INTERMEDIATE ELECTRODES (between cathode and anode)

In no circumstances should the tube be operated without a DC connection between each electrode and the cathode. The total effective impedance between each electrode and the cathode should never exceed the published maximum value. However, no electrode should be connected directly to a high energy source. When such a connection is required, it should be made via a series resistor of not less than 1 kΩ.

CUT-OFF VOLTAGE

Curves showing the limits of the cut-off voltage as a function of grid 2 voltage are generally included in the data. The brightness control should be so dimensioned that it can handle any tube within the limits shown, at the appropriate grid 2 voltage.

The published limits are determined at an ambient illumination level of 10 lux. Because the brightness of a spot is in general greater than that of a raster of the same current, the cut-off voltage determined with the aid of a focused spot will be more negative by about 5 V as compared with that of a focused raster.

TUBE OPERATING PRECAUTIONS

To prevent permanent screen damage, care should be taken:

- not to operate the tube with a stationary picture at high beam currents for extended periods;
- not to operate the tube with a stationary or slowly moving spot except at extremely low beam currents;
- if no EHT bleeder is used, to choose the time constants of the cathode, grid 1, grid 2, and deflection circuits, such that sufficient beam current is maintained to discharge the EHT capacitance before deflection has ceased after equipment has been switched off.

To prevent stray emissions:

- the anode voltage should be less than 12 kV within 5 seconds of switch-off.

To prevent permanent damage to the screen:

- it is strongly advised to provide the video drive circuitry with a facility which blanks the tube automatically in the event of a deflection failure. This is particularly important in applications where the deflection coil is DC coupled to the vertical output stage, as a short-circuit fault in this stage may otherwise lead to immediate de-evacuation of the tube (pierced neck).

EXTERNAL CONDUCTIVE COATING

The external conductive coating must be connected to the chassis. The capacitance of this coating to the final accelerating electrode may be used to provide smoothing for the EHT supply.

The coating is not a perfect conductor and in order to reduce electromagnetic radiation caused by the line time base and the picture content it may be necessary to make multiple connections to the coating. See also 'Flashover'.

METAL RIMBAND

An appreciable capacitance exists between the metal rimband and the internal conductive coating of the tube; its value is quoted in the individual data sheets. To avoid electric shock, a DC connection should be provided between the metal band and the external conductive coating. In receivers where the chassis can be connected directly to the mains there is a risk of electric shock if access is made to the metal band. To reduce the shock to the safe limit, it is suggested that a 2 MΩ resistor capable of handling the peak voltages be inserted between the metal band and the point of contact with the external conductive coating. This safety arrangement will provide the necessary insulation from the mains but in the event of flashover high voltages will be induced on the metal band. It is therefore recommended that the 2 MΩ resistor be bypassed by a 4.7 nF capacitor capable of withstanding the peak voltage determined by the voltage divider formed by this capacitor and the capacitance of the metal rimband to the internal conductive coating, and the anode voltage. The 4.7 nF capacitor also serves to improve EHT smoothing by adding the rimband capacitance to the capacitance of the outer conductive coating.

FLASHOVER

High electric field strengths are present between the gun electrodes of picture tubes. Voltages between gun electrodes may reach values of 20 kV over approx. 1 mm. Although the utmost precautions are taken in the design and manufacture of the tubes, there is always a chance that flashover will occur. The resulting transient currents and voltages may be of sufficient magnitude to cause damage to the tube itself and to various components on the chassis. Arcing terminates when the EHT capacitor is discharged. Therefore it is of vital importance to provide protective circuits with spark gaps and series resistors, which should be connected according to Fig. 1. No other connections between the outer conductive coating and the chassis are permissible.

As our picture tubes are manufactured in Soft-Flash technology, the peak discharge currents are limited to approx. 60 A, offering higher set reliability, optimum circuit protection and component savings (see also Technical Note 039). However this limited value of 60 A is still too high for the circuitry which is directly connected to the tube socket. Therefore Soft-Flash picture tubes should also be provided with spark gaps.

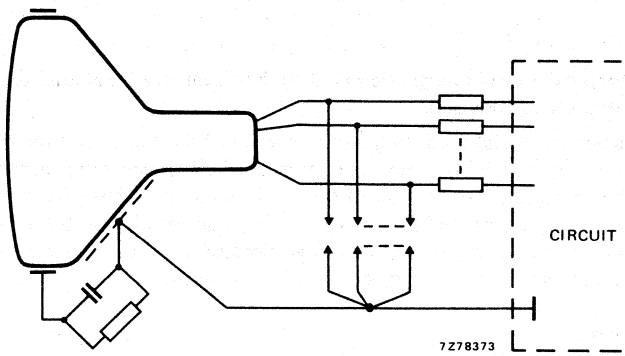

Fig. 1 Flashover protection circuit.

IMPLOSION PROTECTION

All picture tubes employ integral implosion protection and must be replaced with a tube of the same type number or recommended replacement to assure continued safety.

HANDLING

Although all picture tubes are provided with integral implosion protection, which meets the intrinsic protection requirements stipulated in the relevant part of IEC 65, care should be taken not to scratch or knock any part of the tube. The tube assembly should never be handled by the neck, deflection unit or other neck components.

A picture tube assembly can be lifted from the edge-down position by using the two upper mounting lugs. An alternative lifting method is firmly to press the hands against the vertical sides of the rimband.

When placing a tube assembly face downwards ensure that the screen rests on a soft pad of suitable material, kept free from abrasive substances.

In all handling procedures prior to insertion in the receiver cabinet there is a risk of personal injury as a result of severe accidental damage to the tube. It is therefore recommended that protective clothing should be worn, particularly eye shielding.

When suspending the tube assembly from the mounting lugs ensure that a minimum of 2 are used; UNDER NO CIRCUMSTANCES HANG THE TUBE ASSEMBLY FROM ONE LUG.

If provided the slots in the rimband of colour picture tubes are used in the mounting of the degaussing coils. It is not recommended to suspend the tube assembly from one or more of these slots as permanent deformation to the rimbnad can occur.

Remember when replacing or servicing the tube assembly that a residual electrical charge may be carried by the anode contact and also the external coating if not earthed. Before removing the tube assembly from the equipment, earth the external coating and short the anode contact to the coating. The tube should under no circumstances be subjected to accelerations greater than 350 m/s^2. Observe any instructions given on the packing and handle accordingly.

MOUNTING

Unless otherwise specified on the data sheets for individual tubes there are no restrictions on the position of mounting.

The tube socket should not be rigidly mounted but should have flexible leads and be allowed to move freely.

DEGAUSSING

Colour picture tubes employ internal magnetic shielding. However, for individual tube types, optimal degaussing coils and circuitry are advised.

Strong magnetic fields possibly existing during transportation of the tubes, and the manufacturing process of the television sets, may induce magnetic remanence. This remanence cannot always be removed by the automatic degaussing circuitry of the set. It is therefore strongly recommended to apply an external degaussing field of sufficient magnitude and uniformity on the assembly line. This should be followed by activation of the internal set degaussing, with the set positioned in the same terrestrial orientation as for testing and performance judgement.

LOCAL MAGNETIC FIELDS

Care should be taken to avoid local AC or DC magnetic fields such as loudspeakers and transformers. The influence to beam shift may not exceed 5 microns anywhere on the screen surface.

SOAK TESTING

To ensure that the operating conditions of the tube are optimized for the long term, a short stabilization period is required, afer which, the cut-off adjustment should be made and the performance assessed.

It is recommended that the tube should be soak-tested for a minimum period of 2 hours running time, before it is adjusted to its final operating conditions.

After soak testing, if the tube is switched off for a period of 90 seconds or more, a reheat time of 15 minutes is required before making final cut-off adjustments and picture assessment. Where the tube is switched off for less than 90 seconds, the reheat time required is 10 times the switched-off period.

TYPE DESIGNATION

Pro electron type designation system

Example of picture tube: A37-573X

application category
A= TVtube for domestic application
M = display tube for monitor application
face diagonal in cm
screen phosphor category
series number

Pro electron type designation system

Example of picture tube assembly A51-590X3620

application category
A = TV tube for domestic application
M = display tube for monitor application
face diagonal in cm
deflection unit
screen phosphor category
series number

Worldwide type designation system

Example of picture tube: A51EAL00X

application category
A = TV tube for domestic application
M = display tube for monitor application
minimum useful screen diagonal in cm
screen phosphor category
member of family code
family code

Example of monitor tube assembly: M34EAQ10X01

application category
A = TV tube for domestic application
M = display tube for monitor application
minimum useful screen diagonal in cm
integral neck components
screen phosphor category
member of family code
family code

KELLY CHART

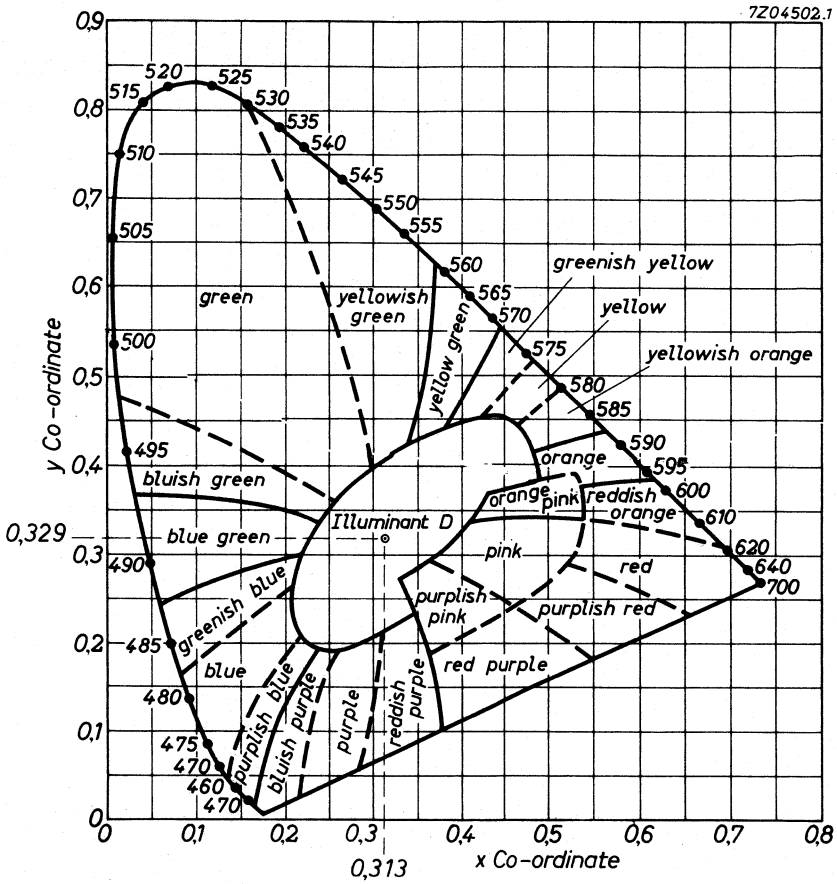
7Z04502.1
y Co-ordinate
x Co-ordinate
0,329
0,313
green
yellowish green
yellow green
greenish yellow
yellow
yellowish orange
orange
orange pink
reddish orange
pink
red
purplish pink
purplish red
red purple
reddish purple
purple
bluish purple
purplish blue
blue
greenish blue
blue green
bluish green
Illuminant D
515
520
525
530
535
540
545
550
555
560
565
570
575
580
585
590
595
600
610
620
640
700
510
505
500
495
490
485
480
475
470
460
470

COLOUR TV PICTURE TUBES AND ASSEMBLIES

SURVEY OF TUBES AND ASSEMBLIES

basic tubes	basic assembly
A34EAC00X	A34EAC00X02
A36EAM00X	A36EAM00X01
A37-573X	A37-573X0510
A37-590X	A37-590X0620
A38EAC00X	A38-EAC00X01
A41EAM00X	A41EAM00X01
A42-592X	A42-592X1620
A48EAC00X	A48EAC00X01
A51-570X	A51-570X3750
A51-590X	A51-590X3620
A51EAK01X	A51EAK01X01
A51EAL00X	A51EAL00X01
A51EAM30X	A51EAM30X01
A59EAK00X	A59EAK00X01
A66EAK50X	A66EAK50X01
A78EBK03X	A78EBK03X01
M78JUA98X	M78JUA98X01

Hi-Bri COLOUR PICTURE TUBE

- 90° deflection
- In-line, thermally stable hi-bi potential gun
- 22,5 mm neck diameter
- Hi-Bri technology
- Pigmented phosphors
- Slotted shadow mask optimized for minimum moiré
- Fine pitch over entire screen
- Phosphor lines follow glass contour
- Quick heating low-power cathodes
- Soft-flash technology
- Internal magnetic shield
- Reinforced envelope for push-through mounting
- Combined with a deflection unit of the AT1625 series, it forms a self-converging and raster correction free assembly

QUICK REFERENCE DATA

Deflection angle	90°
Minimum useful screen diagonal	34 cm
Overall-length	334 mm
Neck diameter	22,5 mm
Heating	6,3 V, 310 mA
Anode voltage	23 kV
Focusing voltage	28% of anode voltage

ELECTRON-OPTICAL DATA

Electron gun system		unitized triple-aperture electrodes
Focusing method		electrostatic
Focus lens		hi-bi-potential
Deflection method		magnetic
Deflection angles		
diagonal		approx. 90°
horizontal		approx. 78°
vertical		approx. 60°

ELECTRICAL DATA

Capacitances		
anode to external conductive coating including rimband	$C_{a(m+m')}$	min. 800 pF
grid 1 to all other electrodes	C_{g1}	15 pF
cathode of each gun to all other electrodes	C_{kR}, C_{kG}, C_{kB}	4 pF
focusing electrode to all other electrodes	C_{g3}	4 pF
Heating		indirect by AC or DC
heater voltage	V_f	6,3 V
→ heater current	I_f	310 mA

OPTICAL DATA

Screen	metal-backed vertical phosphor stripes; phosphor lines follow glass contour
Screen finish	satinized
Useful screen dimensions	
diagonal	min. 335,4 mm
horizontal axis	min. 280,8 mm
vertical axis	min. 210,6 mm
area	min. 580 cm^2
Phosphors	
red	pigmented europium activated rare earth
green	sulphide type
blue	pigmented sulphide type
Centre-to-centre distance of vertical identical colour phosphor stripes, at screen centre	0,65 mm
Light transmission of face glass at centre	68%

MECHANICAL DATA (see also the figures on the following pages)

Overall length	334,4 ± 5 mm
Neck diameter	$22{,}5^{+1{,}4}_{-0{,}7}$ mm*
Bulb dimensions	
diagonal	max. 368 mm
width	max. 317 mm
height	max. 248 mm
Base	JEDEC B8-288
Anode contact	small cavity contact J1-21, IEC 67-III-2
Mounting position	anode contact on top
Net mass	approx. 6 kg

Handling

During shipment and handling the tube should not be subjected to accelerations greater than 35g in any direction.

* In the region of 66 mm from the neck end, the maximum diameter is 23,2 mm.

MECHANICAL DATA (continued)

Notes are given after the drawings.

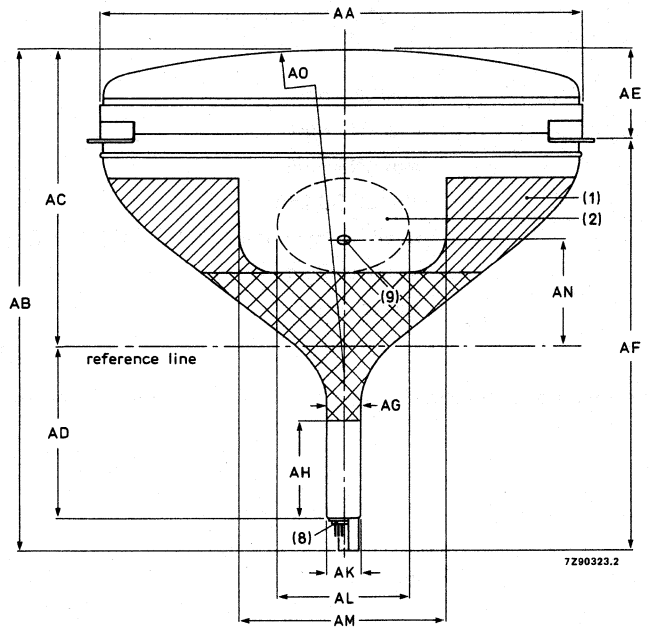

Fig. 1

Dimensions in mm

AA	319 max
AB	339,4 max
AC	200,5 ± 4
AD	118 ± 1
AE	63,5 max
AF	278 max
AG	$22,5^{+1,4}_{-0,7}$
AH	66
AK	22,5 ± 0,7
AL	90 ± 10
AM	140 ± 3
AN	72 ± 3,2
AO	R575 approx.

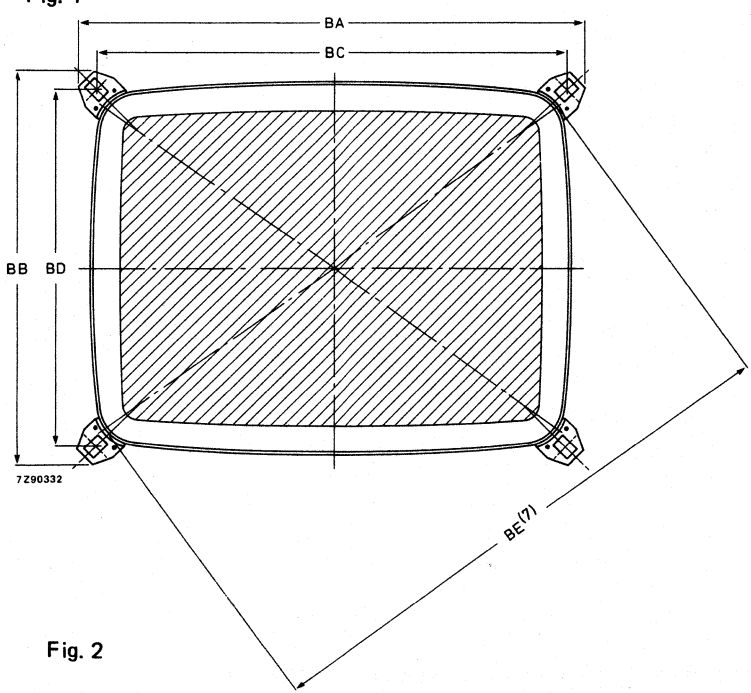

Fig. 2

Dimensions in mm

BA	336 max
BB	268 max
BC	311,4
BD	243,2
BE	375 max

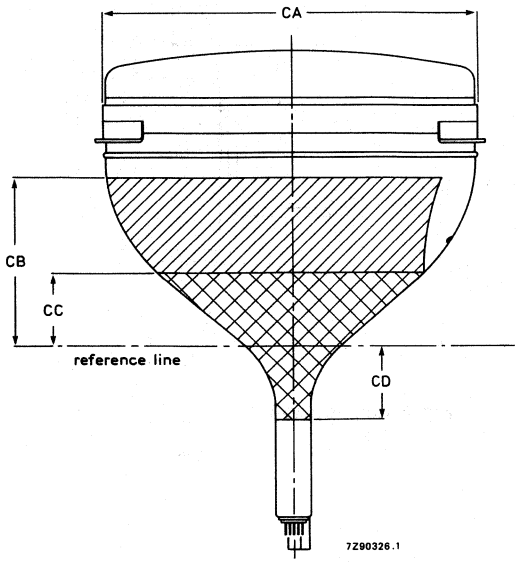

Dimensions in mm

CA	251 max
CB	119 min
CC	54 max
CD	53 max

Fig. 3

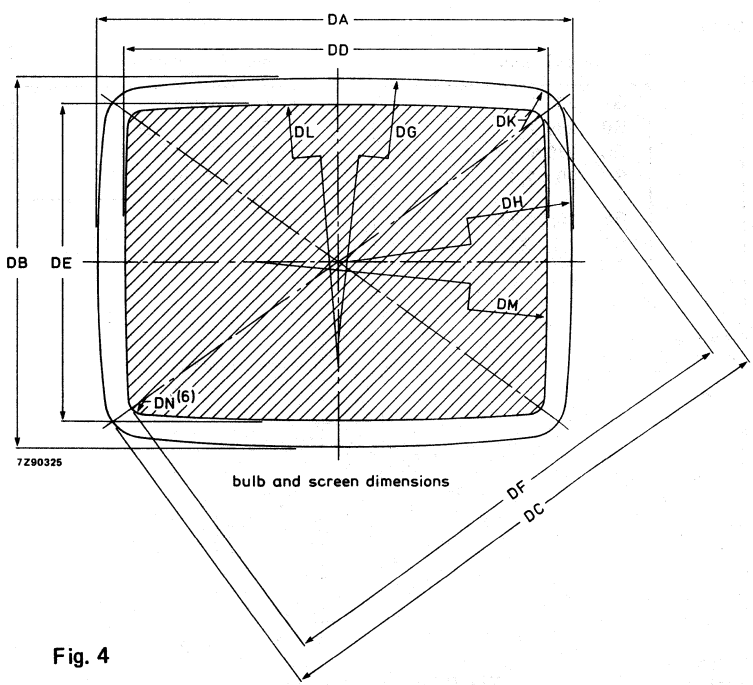

Dimensions in mm

DA	315,4 ± 1,6
DB	246,4 ± 1,6
DC	366,4 ± 1,6
DD	280,8 min
DE	210,6 min
DF	335,4 min
DG	R1545
DH	R1173
DK	R27,1
DL	R2773
DM	R2299
DN	R11,6

Fig. 4

MECHANICAL DATA (continued)

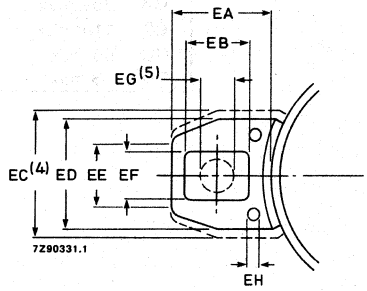

Fig. 5 Lug dimensions.

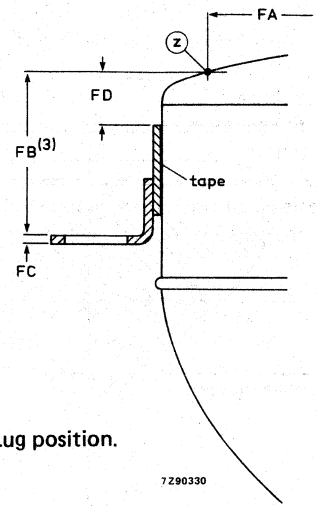

Fig. 6 Lug position.

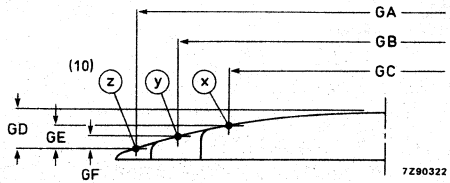

Fig. 7 Screen reference points.

Dimensions in mm

EA	22,5 ± 0,2
EB	14 ± 0,2
EC	29 max
ED	25
EE	14
EF	11 ± 0,2
EG	7,5
EH	3 min

Dimensions in mm

GA	335,4
GB	280,8
GC	210,6
GD	25 ± 2,0
GE	15,3 ± 2,0
GF	7,6 ± 2,0

Dimensions in mm

FA	335,4
FB	35,5 ± 1,8
FC	2
FD	12 min

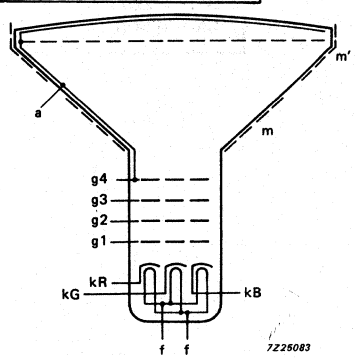

Fig. 8 Electrode configuration.

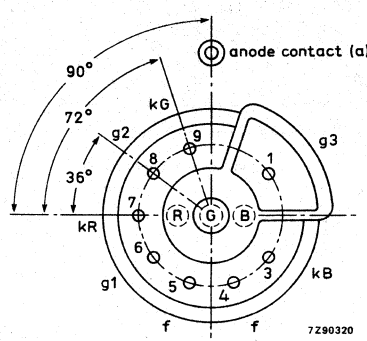

Fig. 9 Pin arrangement.

Notes to outline drawings

1. Configuration of outer conductive coating may be different, but will contain the contact areas as shown in the drawing.
2. To clean this area, wipe only with a soft lintless cloth.
3. One of the four mounting lugs may deviate (1,5 mm max.) from the plane of the other three lugs. This deviation is incorporated in the tolerance of ± 1,8 mm.
4. Minimum space to be reserved for mounting lug.
5. The position of the mounting screw in the cabinet must be within a circle of 7,5 mm diameter drawn around the true geometrical positions, i.e. the corners of a rectangle of 311,4 mm x 243,2 mm.
6. Co-ordinates for radius R = 11,6 mm; x = 126,98 mm, y = 90,76 mm.
7. Maximum dimensions in plane of lugs.
8. The socket for this base should not be rigidly mounted; it should have flexible leads and be allowed to move freely. After mounting of the tube in the cabinet note that the position of the base can fall within a circle, having a diameter of max. 50 mm, concentric with an imaginary tube axis.
9. Small cavity contact J1-21, IEC 67-III-2.
10. The X, Y and Z reference points are located on the outside surface of the face plate at the intersection of the minor, major and diagonal screen axis respectively, with the minimum published screen.

Reference line gauge; G-R90CJ10

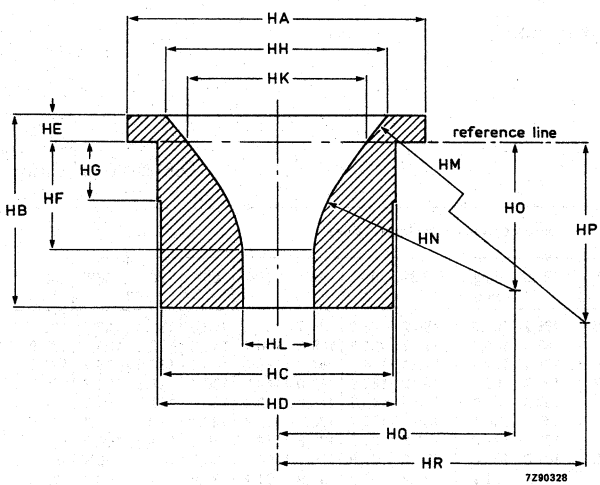

Fig. 10 Reference line guage.

Dimensions in mm

HA	ϕ100,00
HB	65,00
HC	ϕ78,70
HD	ϕ80,00
HE	9,20 ± 0,02
HF	36,22 ± 0,02
HG	20,00
HH	ϕ75,48 ± 0,02
HK	ϕ60,77 ± 0,02
HL	$\phi 23{,}90^{+0{,}04}_{-0}$
HM	R220,00
HN	R70,00
HO	50,30
HP	132,71
HQ	80,52
HR	205,85

Maximum cone contour

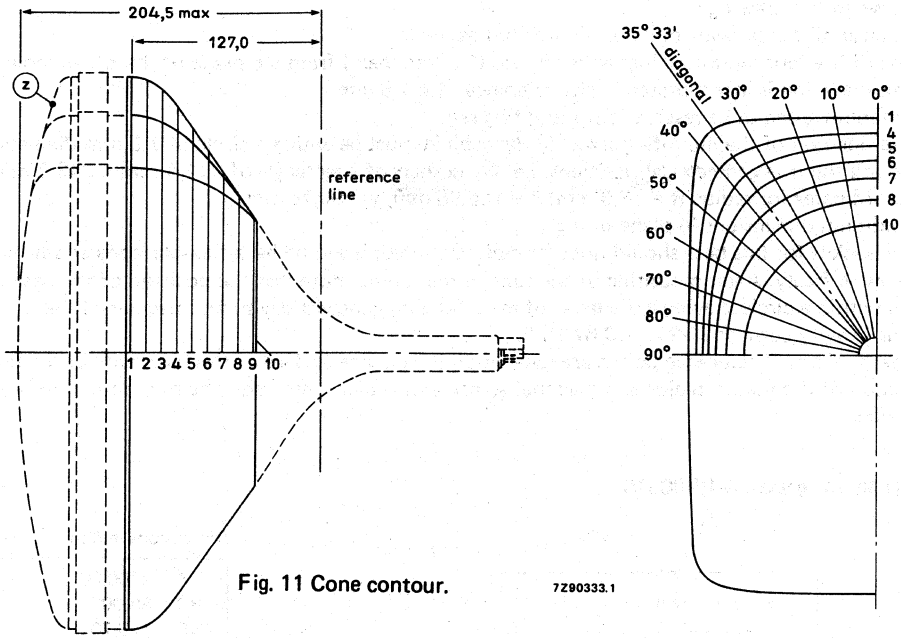

Fig. 11 Cone contour.

Table 1 Cone contour data

Dimensions in mm

section	nom. distance from reference line	distance from centre (max. values)														
		0°	10°	20°	25°	30°	32° 30'	diag. axes	37° 30'	40°	45°	50°	60°	70°	80°	90°
1	127,0	160,3	162,5	169,4	174,8	181,6	185,2	186,7	186,2	183,8	171,7	160,1	143,3	133,0	127,3	125,5
2	117,0	159,5	161,6	168,3	173,5	180,1	183,5	185,3	184,7	181,8	169,8	158,7	142,5	132,3	126,8	125,0
3	107,0	156,4	158,3	164,2	168,5	173,8	176,4	177,7	177,1	174,5	164,7	155,0	140,1	130,5	125,2	123,5
4	97,0	149,9	151,5	156,0	159,2	162,7	164,2	165,1	164,9	163,5	157,0	149,3	136,1	127,3	122,3	120,7
5	87,0	141,3	142,6	146,2	148,5	150,3	150,8	150,8	150,3	149,2	145,3	140,1	130,0	122,6	118,3	116,9
6	77,0	131,1	132,2	134,5	135,7	136,4	136,5	136,4	136,1	135,4	133,4	130,4	123,4	117,4	113,7	112,4
7	67,0	119,0	119,7	120,9	121,5	121,9	121,9	121,9	121,8	121,5	120,6	119,2	115,3	111,2	108,2	107,1
8	57,0	105,7	105,9	106,5	106,8	107,0	107,0	107,0	107,0	107,0	106,7	106,2	104,7	102,7	100,9	100,0
9	47,0	91,6	91,6	91,7	91,8	91,8	91,8	91,9	91,9	91,9	91,8	91,7	91,5	91,1	90,7	90,5
10	45,0	88,6	88,7	88,7	88,8	88,8	88,8	88,8	88,7	88,7	88,7	88,6	88,5	88,3	88,2	88,1

Base JEDEC B8-288

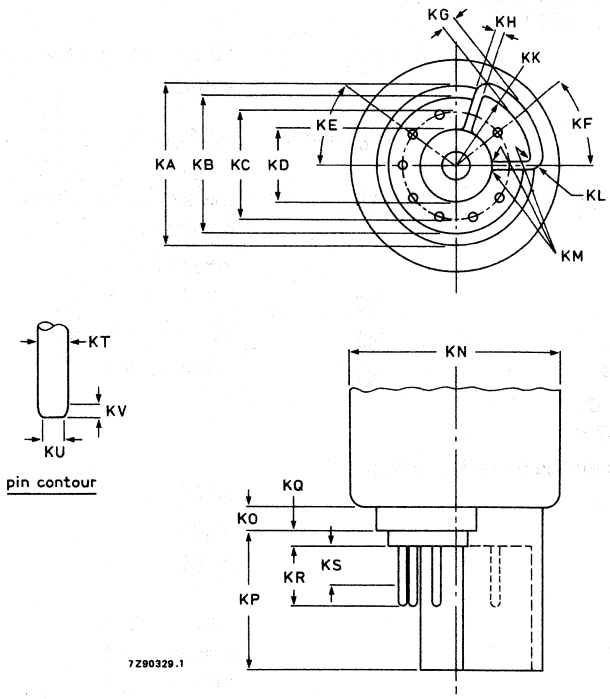

Dimensions in mm

KA	17,9 max
KB	15,4 max
KC	12,0
KD	7,9 min; 8,2 max
KE	36°
KF	38°
KG	1,3 max
KH	0,8 min; 1,0 max
KK	R8,66 ± 0,1
KL	R1,0
KM	R0,25
KN	23,2 max
KO	1,2 max
KP	13,6 ± 0,2
KQ	1,6 max
KR	6,85 max
KS	4,5 min
KT	1,016 ± 0,076
KU	0,63 max
KV	0,4 min

Fig. 12 JEDEC base.

TYPICAL OPERATING CONDITIONS

The voltages are specified with respect to grid 1.

Anode voltage	$V_{a,g4}$	23 kV
Grid 3 (focusing electrode) voltage	V_{g3}	6,1 to 6,9 kV
Grid 2 voltage for a spot cut-off voltage V_k = 120 V	V_{g2}	310 to 600 V
Luminance at the centre of the screen*	L	140 cd/m²

* Tube settings adjusted to produce white of 6500K + 7 M.P.C.D. (x = 0,313, y = 0,329) focused raster, current density 0,4 μA/cm².

EQUIPMENT DESIGN VALUES

The values are valid for anode voltages between 20 and 27,5 kV.
The voltages are specified with respect to grid 1.

Grid 3 (focusing electrode) voltage	V_{g3}	26,6 to 29,8% of anode voltage
Grid 2 voltage and cathode voltage for visual extinction of focused spot	V_{g2} and V_k	see Fig. 14
Difference in cut-off voltages between guns in any tube	ΔV_k	lowest value > 80% of highest value
Video drive characteristics		see graphs*
→ Grid 3 (focusing electrode) current	I_{g3}	−2 to +2 μA
→ Grid 2 current	I_{g2}	−2 to +2 μA
→ Grid 1 current under cut-off conditions	I_{g1}	−2 to +2 μA

To produce white of 6500K + 7 M.P.C.D.
(CIE co-ordinates x = 0,313, y = 0,329)

Percentage of the total anode current supplied by each gun (typical)

red gun		38,3%
green gun		35,8%
blue gun		25,9%

Ratio of anode currents

red gun to green gun	min.	0,8
	average	1,1
	max.	1,4
red gun to blue gun	min.	1,1
	average	1,5
	max.	1,9
blue gun to green gun	min.	0,5
	average	0,7
	max.	0,9

* For optimum picture performance it is recommended that the cathodes are not driven below + 10 V.

LIMITING VALUES (Design maximum rating system unless otherwise stated)

The voltages are specified with respect to grid 1.

Anode voltage	$V_{a,g4}$	max.	27,5	kV	notes 1, 2, 3
		min.	20	kV	notes 1 and 4
Long-term average current for three guns	I_a	max.	750	μA	note 5
Grid 3 (focusing electrode) voltage	V_{g3}	max.	11	kV	
Grid 2 voltage, peak	V_{g2p}	max.	1000	V	
Cathode voltage					
positive	V_k	max.	400	V	
positive operating cut-off	V_k	max.	200	V	
negative	$-V_k$	max.	0	V	
negative peak	$-V_{kp}$	max.	2	V	
Heater voltage	V_f	6,3 V	+5 / −10	%	notes 1 and 6
Heater-cathode voltage					
heater negative with respect to cathode					
after equipment warm-up period	V_{kf}	max.	200	V	
heater positive with respect to cathode	$-V_{kfp}$	peak	200	V	note 1
	$-V_{kf}$	max. (d.c. component value)	0	V	

Notes

1. Absolute maximum rating system.
2. The picture tube does not emit X-radiation above 1 μSv/h when operated within its absolute maximum ratings.
3. During adjustment on the production line this value is likely to be surpassed considerably. It is therefore strongly recommended to first make the necessary adjustments for normal operation without picture tube.
4. Operation of the tube at lower voltages impairs the luminance and resolution.
5. The short-term average anode current should be limited by circuitry to 1000 μA.
6. For maximum cathode life and optimum performance, it is recommended that the heater supply be designed for 6,3 V at zero beam current.

FLASHOVER PROTECTION

With the high voltage used with this tube (max. 27,5 kV) internal flashovers may occur. As a result of the Soft-Flash technology these flashover currents are limited to approx. 60 A offering higher set reliability, optimum circuit protection and component savings.

Primary protective circuitry using properly grounded spark gaps and series isolation resistors (preferably carbon composition) is still necessary to prevent tube damage. The spark gaps should be connected to all picture tube electrodes at the socket according to the figure below; they are not required on the heater pins. No other connections between the outer conductive coating and the chassis are permissible. The spark gaps should be designed for a breakdown voltage at the focusing electrode (g3) of 12 kV (1,5 x V_{g3} max. at $V_{a,g4}$ = 25 kV), and at the other electrodes of 1,5 to 2 kV.

The values of the series isolation resistors should be as high as possible (min. 1,5 kΩ) without causing deterioration of the circuit performance. The resistors should be able to withstand an instantaneous surge of 20 kV for the focusing circuit and 12 kV for the remaining circuits without arcing.

Additional information is available on request.

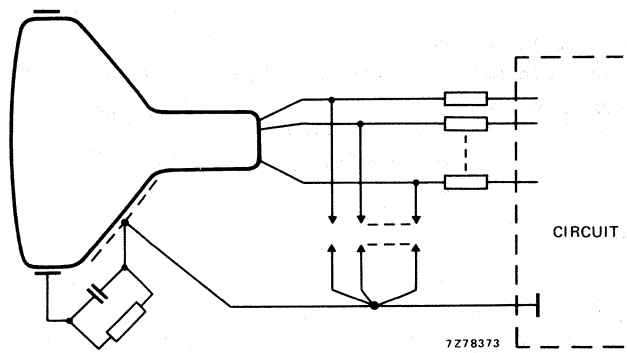

Fig. 13 Flashover protection circuit.

CENTRING ERROR

Maximum centring error in any direction after colour purity, static convergence, and horizontal centre line correction, measured with deflection coils in nominal position	4 mm

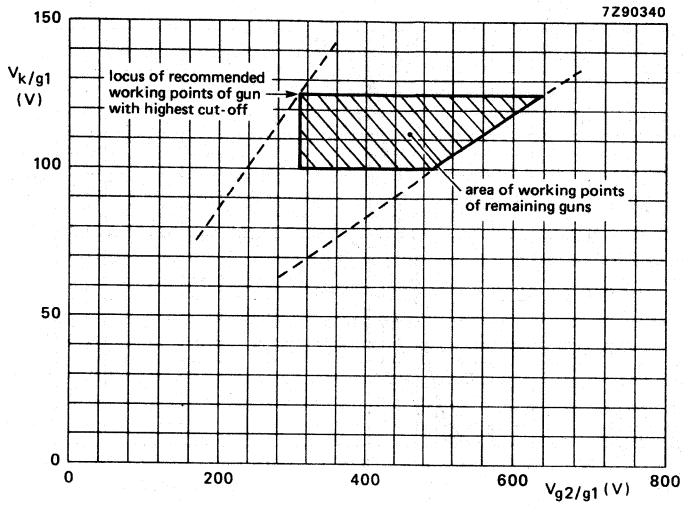

Fig. 14 Spot cut-off design chart.

Grid 2 voltage (V_{g2}) adjusted for highest gun spot cut-off voltage V_k = 125 V.

Remaining guns adjusted for spot cut-off by means of cathode voltage

V_{g2} range 310 to 630 V;

V_k range 100 to 125 V.

Adjustment procedure:

Set the cathode voltage (V_k) for each gun at 125 V; increase the grid 2 voltage (V_{g2}) from approx. 300 V to the value at which one of the colours becomes just visible. Now decrease the cathode voltage of the remaining guns so that the other colours also become visible.

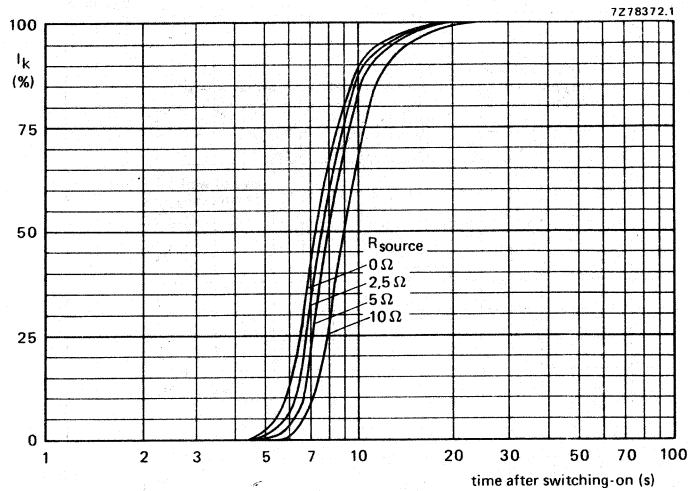

Fig. 15 Cathode heating time after switching on, measured under typical operating conditions.

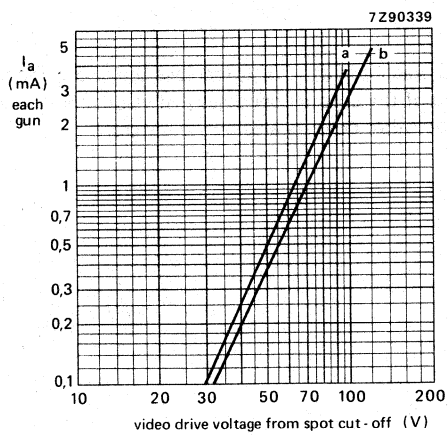

Fig. 16 Typical cathode drive characteristics.

V_f = 6,3 V;

$V_{a,g4}$ = 23 kV;

V_{g3} adjusted for focus

V_{g2} (each gun) adjusted to provide spot cut-off for V_k = 100 V (curve a), V_k = 125 V (curve b).

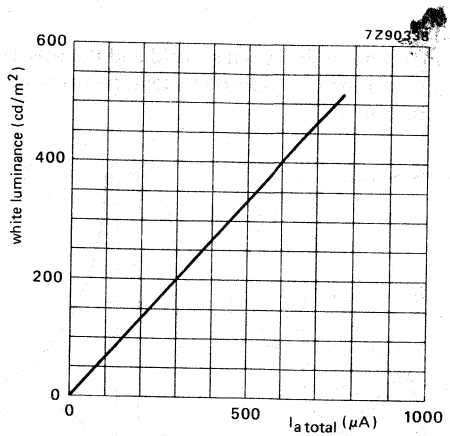

Fig. 17 Luminance at the centre of the screen as a function of I_{total}.

$V_{a,g4}$ = 23 kV, V_f = 6,3 V, V_{g3} adjusted for optimum focus.

Scanned area = 280,8 mm x 210,6 mm; CIE co-ordinates x = 0,313, y = 0,329.

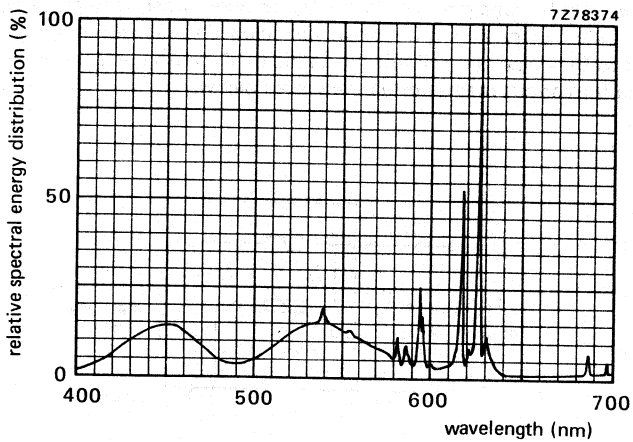

Fig. 18 Simultaneous excitation of red, green and blue phosphor, measured in a tube, to produce white of x = 0,313, y = 0,329. Exact shape of the peaks depends on the resolution of the measuring apparatus.

Colour co-ordinates:

	x	y
red	0,635	0,340
green	0,315	0,600
blue	0,150	0,060

DEGAUSSING

The picture tube has an internal magnetic shield. This shield and the shadow mask with its suspension system may be provided with an automatic degaussing system, consisting of one magnetic coil winding mounted on the cone of the picture tube.

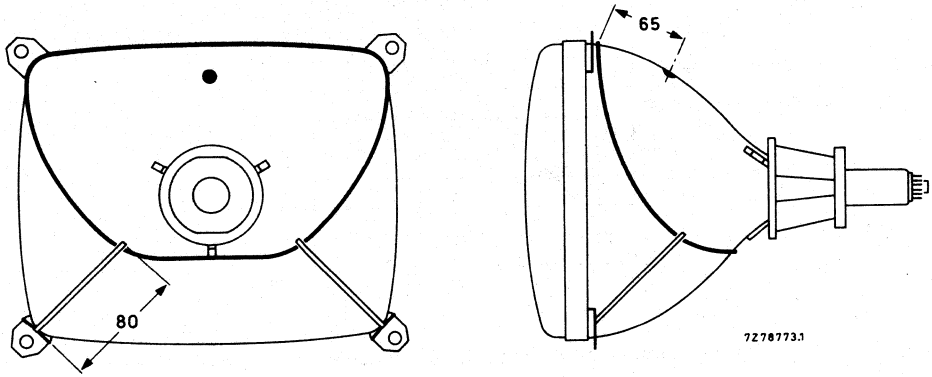

Fig. 19 Position of degaussing coil on the picture tube; dimensions are given in mm.

For proper degaussing an initial magnetomotive force (MMF) of 600 ampere-turns is required in the coil. This MMF has to be gradually decreased by appropriate degaussing circuitry. In the steady state, no significant MMF should remain in the coil ($\leqslant$ 0,6 ampere-turns). If single-phase power rectification is employed in the TV circuitry, provision should be included to prevent asymmetric distortion of the AC voltage applied to the degaussing circuit due to high DC inrush currents. An example of a degaussing circuit and coil data for various mains voltages are given below.

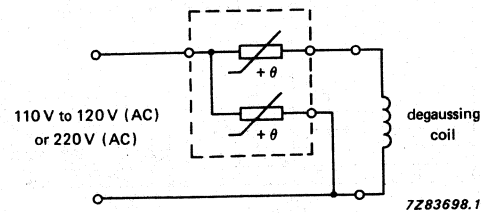

Fig. 20 Degaussing circuit using dual PTC thermistor.

Data of degaussing coil	110 V (AC) mains	220 V (AC) mains
Circumference	90 cm	90 cm
Number of turns	60	120
Copper wire diameter	0,45 mm	0,3 mm
Resistance	6 Ω	27 Ω
Catalogue number of appropriate dual PTC thermistor	2322 662 98013	2322 662 98009

Hi-Bri COLOUR PICTURE TUBE ASSEMBLY

- Factory preset tube/coil assembly
- Self-converging and raster correction free
- 34 cm, 90° colour picture tube A34EAC00X
- Hybrid saddle toroidal deflection unit AT1625/10

QUICK REFERENCE DATA

Deflection angle	90°
Minimum useful screen diagonal	34 cm
Overall length	339 mm
Neck diameter	22.5 mm

MECHANICAL DATA

Dimensions in mm

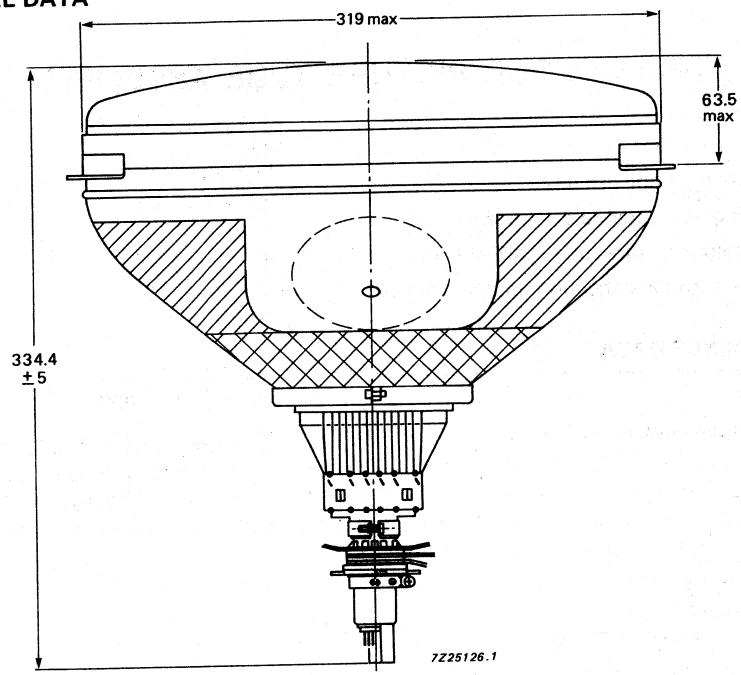

Fig. 1 Colour picture tube assembly A34EAC00X02.

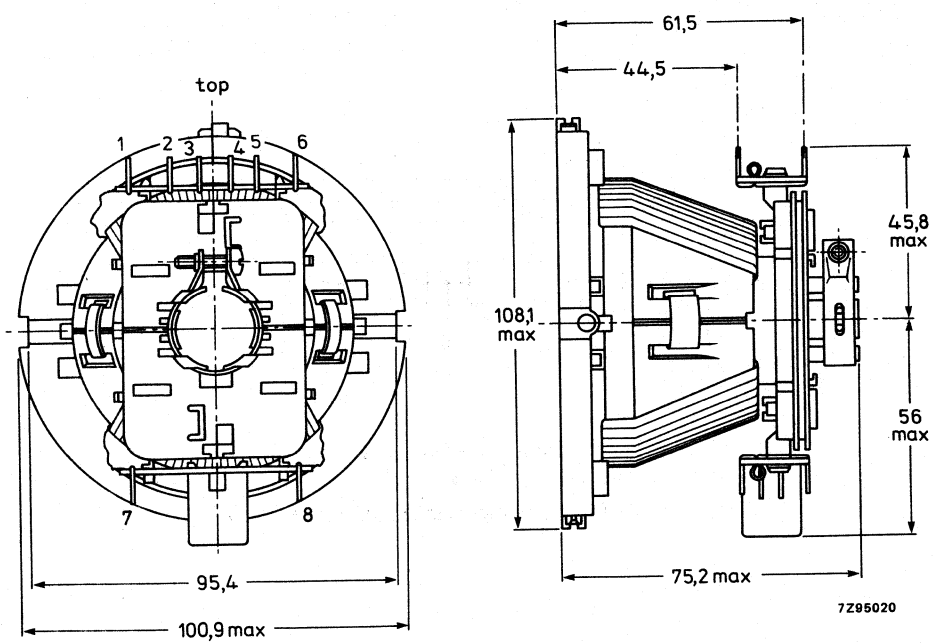

Fig. 2 Deflection unit AT1625/10.

ELECTRICAL DATA OF DEFLECTION UNIT

Line deflection coils (including additional coil)	
Inductance	2.43 mH ± 4%
Resistance at 25 °C	3.3 Ω ± 10%
Magnetic flux at 23 kV	5.27 mWb ± 2.5%
Line deflection current, raster scan, at 23 kV	2.17 A(p-p)
Raster scan	280 mm
Inductance of additional coil	0.15 mH ± 4%
Field deflection coils	
Inductance	110 mH ± 10%
Resistance at 25 °C	54.4 Ω ± 7%
Field deflection current, raster scan, at 23 kV	0.38 A(p-p)
Raster scan	210 mm

Cross-talk	a voltage of 10 V, 15625 Hz applied to the line coils causes no more than 0.40 V across the field coils (damping resistors included)
Insulation resistance at 1 kV DC	
between line and field coils	> 500 MΩ
between line coil and core clamp	> 500 MΩ
between field coil and core clamp	> 10 MΩ
Maximum operating temperature (average copper temperature)	+ 90 °C
Storage temperature range	−25 to + 90 °C
Flame retardent	according to UL 1413, category 94-V1

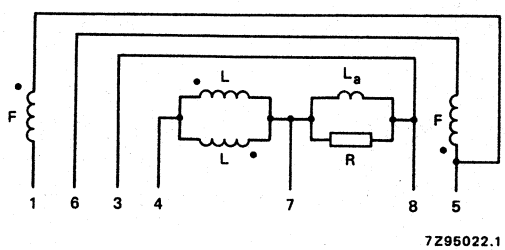

Fig. 3 Connection diagram. L = line coils, F = field coils, L_a = additional coil; R = 4.7 kΩ.

The beginning of the windings is indicated with ●

ENVIRONMENTAL TEST SPECIFICATIONS OF DEFLECTION UNITS

Vibration	IEC 68-2-6 (test Fc)
Shock	IEC 68-2-27 (test Ea)
Bump	IEC 68-2-29 (test Eb; 25g)
Cold	IEC 68-2-1 (test Ab)
Dry heat	IEC 68-2-2 (test Bb)
Damp heat, steady state	IEC 68-2-3 (test Ca)
Cyclic damp heat	IEC 68-2-30 (test Db)
Change of temperature	IEC 68-2-14 (test Nb)

FLAT SQUARE Hi-Bri COLOUR PICTURE TUBE

- Flat and square screen
- 90° deflection
- In-line, hi-bi potential A R T* gun
- 22,5 mm neck diameter
- Shadow mask of NiFe alloy with low thermal expansion
- Hi-Bri technology
- Mask with corner suspension
- Pigmented phosphors
- Fine pitch over entire screen
- Quick-heating low-power cathodes
- Soft flash
- Slotted shadow mask optimized for minimum moiré at 625 lines system
- Internal magnetic shield
- Internal multipole
- Reinforced envelope for push-through mounting
- The tube is supplied with a deflection unit of the AT6060 series; it forms a self-converging and raster correction free assembly

QUICK REFERENCE DATA

Deflection angle	90°
Minimum useful screen diagonal	36 cm
Overall length	340 mm
Neck diameter	22,5 mm
Heating	6,3 V, 310 mA
Anode voltage	23 kV
Focusing voltage	31% of anode voltage

* Aberration Reducing Triode.

ELECTRON-OPTICAL DATA

Electron gun system		unitized triple-aperture electrodes; aberration reducing triode
Focusing method		electrostatic
Focus lens		hi-bi-potential
Deflection method		magnetic
Deflection angles		
diagonal		approx. 90°
horizontal		approx. 78°
vertical		approx. 60°

ELECTRICAL DATA

Capacitances		
anode to external conductive coating including rimband	$C_{a(m+m')}$	min. 800 pF
grid 1 to all other electrodes	C_{g1}	15 pF
cathode of each gun to all other electrodes	C_{kR}, C_{kG}, C_{kB}	4 pF
focusing electrode to all other electrodes	C_{g3}	4 pF
Heating		indirect by AC or DC
heater voltage	V_f	6,3 V
heater current	I_f	310 mA

OPTICAL DATA

Screen	metal-backed vertical phosphor stripes; phosphor lines follow glass contour
Screen finish	high polish
Useful screen dimensions	
diagonal	min. 355,6 mm
horizontal axis	min. 284,5 mm
vertical axis	min. 213,4 mm
area	min. 607 cm^2
Positional accuracy of the screen with respect to the glass contour	see Figures on the next page
Phosphors	
red	pigmented europium activated rare earth sulphide type
green	
blue	pigmented sulphide type
Centre-to-centre distance of vertical identical colour phosphor stripes, at screen centre	0,52 mm

Light transmission of face glass at centre		65%
Luminance at the centre of the screen	L	110 cd/m² *

A = 121,70 mm
B = 161,20 mm
C = 87,50 mm
D = 126,73 mm
E = 26,83 mm

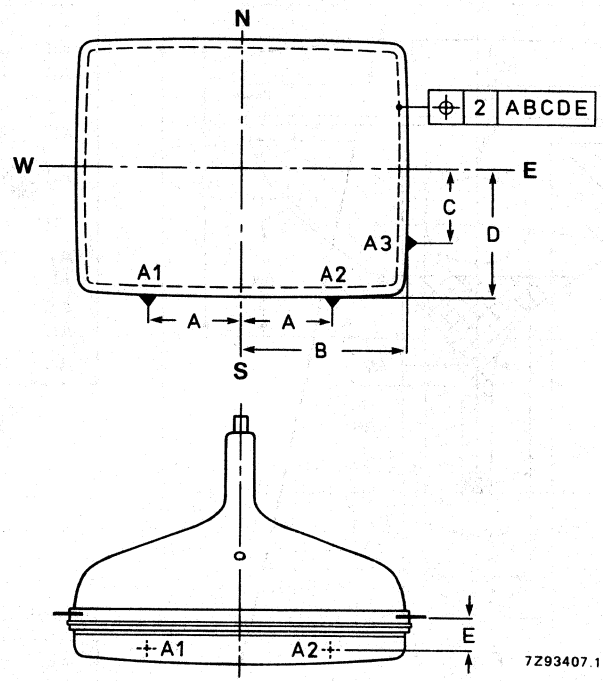

Fig. 1 Tube alignment.

MECHANICAL DATA (see also the figures on the following pages)

Overall length	340 ± 4,5 mm
Neck diameter	$22{,}5\ ^{+\ 1{,}4}_{-0{,}7}$ mm **
Bulb dimensions	
diagonal	max. 392,6 mm
width	max. 328,4 mm
height	max. 263,0 mm
Base	JEDEC B8-288
Anode contact	small cavity contact J1-21, IEC 67-III-2
Mounting position	anode contact on top
Net mass	approx. 7 kg

Handling

During shipment and handling the tube should not be subjected to accelerations greater than 35g in any direction.

* Tube settings adjusted to produce white D (x = 0,313, y = 0,329), focused raster, current density 0,4 μA/cm².

** In the region of 66 mm from the neck end, the maximum diameter is 23,2 mm.

MECHANICAL DATA (continued)

Notes are given after the drawings.

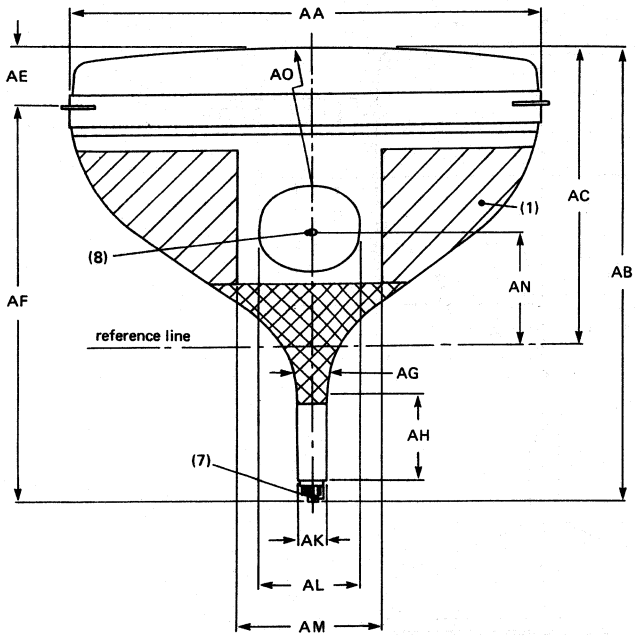

Fig. 2

Dimensions in mm

AA	332 max
AB	340 ± 4,5
AC	204 ± 4
AE	51,5 max
AF	297 max
AG	$22{,}5\ ^{+1{,}4}_{-0{,}7}$
AH	66
AK	22,9 ± 0,3
AL	110 ± 10
AM	140 ± 3
AN	75 ± 3,2
AO	R1200 approx

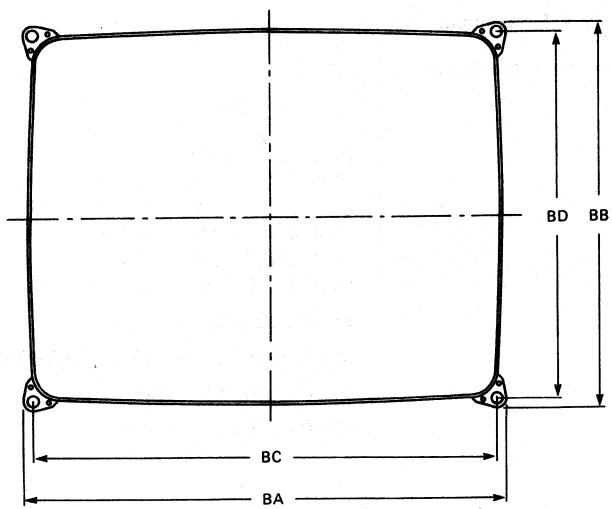

Fig. 3

Dimensions in mm

BA	346,5 max
BB	281 max
BC	326,4
BD	261

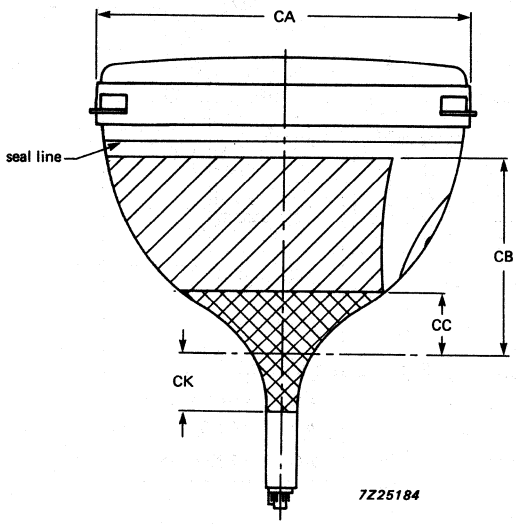

Fig. 4

Dimensions in mm

CA	267 max
CB	127 min
CC	53 max
CG	396,5
CK	53 max

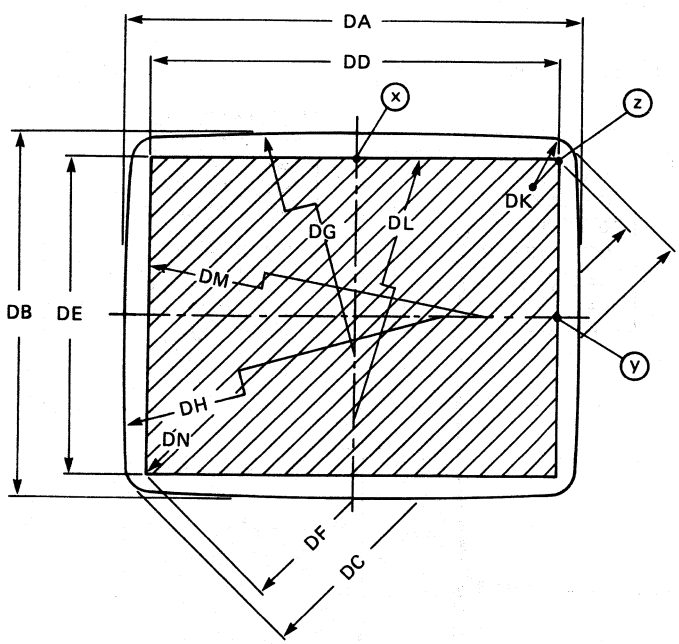

Fig. 5

Dimensions in mm

DA	326,8 ± 1,6
DB	261,4 ± 1,6
DC	391 ± 1,6
DD	284,5 min
DE	213,4 min
DF	355,6 min
DG	R2028
DH	R2029
DK	R21,4
DL	R10078
DM	R5661
DN	R0

MECHANICAL DATA (continued)

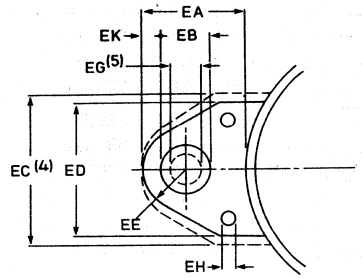

Fig. 6 Lug dimensions.

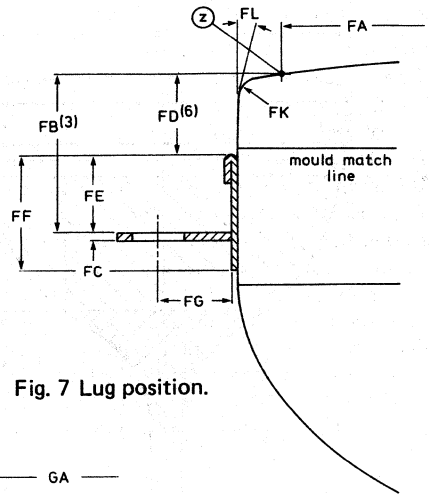

Fig. 7 Lug position.

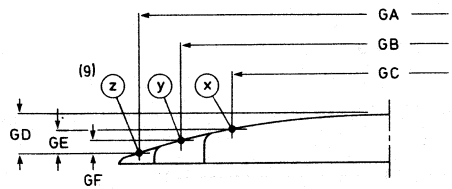

Fig. 8 Screen reference points.

Dimensions in mm

EA	20,6 ± 0,5
EB	11,5 ± 0,2
EC	35 max
ED	30 ± 1
EE	R8
EG	8
EH	3 min
EK	2,25 ± 0,3

Dimensions in mm

GA	355,6
GB	284,5
GC	213,4
GD	13,25 ± 2
GE	8,5 ± 2
GF	4,79 ± 2

Dimensions in mm

FA	355,6
FB	34,5 ± 1,5
FC	2,5
FD	17,5 min
FE	15 max
FF	24 max
FG	13,1
FK	R8
FL	5°

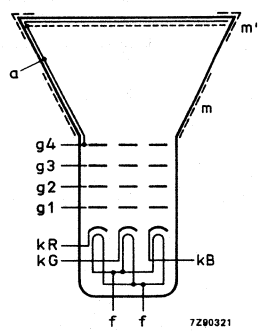

Fig. 9 Electrode configuration.

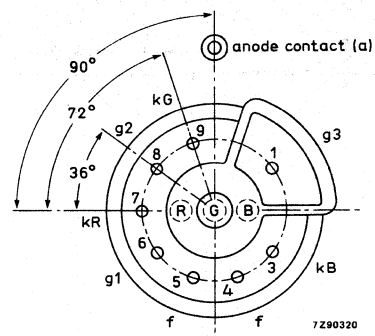

Fig. 10 Pin arrangement.

Notes to outline drawings

1. Configuration of outer conductive coating may be different, but will contain the contact areas as shown in the drawing.
2. To clean this area, wipe only with a soft lintless cloth.
3. One of the four mounting lugs may deviate (1,5 mm max.) from the plane of the other three lugs. This deviation is incorporated in the tolerance of ± 1,5 mm.
4. Minimum space to be reserved for mounting lug.
5. The position of the mounting screw in the cabinet must be within a circle of 8 mm diameter drawn around the true geometrical positions, i.e. corners of a rectangle of 326,4 mm x 261 mm.
6. Distance from point Z to any hardware.
7. The socket for this base should not be rigidly mounted; it should have flexible leads and be allowed to move freely. After mounting of the tube in the cabinet note that the position of the base can fall within a circle, having a diameter of max. 50 mm, concentric with an imaginary tube axis.
8. Small cavity contact J1-21, IEC 67-III-2.
9. The X, Y and Z reference points are located on the outside surface of the face plate at the intersection of the minor, major and diagonal screen axis respectively, with the minimum published screen.

Table 1 Sagittal heights with reference to screen centre at the edge of the minimum useful screen

coordinates		sagittal height
x mm	y mm	mm
0*	106,70	4,75
10	106,70	4,79
20	106,70	4,92
30	106,70	5,13
40	106,70	5,42
50	106,70	5,80
60	106,70	6,26
70	106,70	6,80
80	106,70	7,43
90	106,70	8,15
100	106,70	8,94
110	106,70	9,83
120	106,70	10,79
130	106,70	11,84
140	106,70	12,98
142,25**	106,70	13,25
142,25	100	12,66
142,25	90	11,86
142,25	80	11,15
142,25	70	10,52
142,25	60	9,97
142,25	50	9,51
142,25	40	9,13
142,25	30	8,84
142,25	20	8,63
142,25	10	8,50
142,25▲	0	8,46

* Point ⊗
** Diagonal
▲ Point Ⓥ

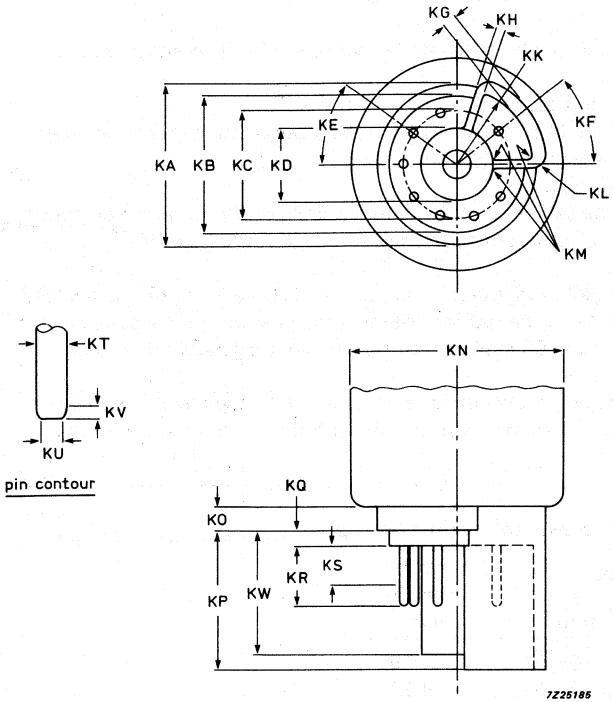

Dimensions in mm

KA	17,9 mm
KB	15,4 max
KC	12,0
KD	7,9 min; 8,2
KE	36°
KF	38°
KG	1,3 max
KH	0,8 min; 1,0 max
KK	R8,66 ± 0,1
KL	R1,0
KM	R0,25
KN	23,2 max
KO	1,2 max
KP	15,4 ± 0,2
KQ	1,6 max
KR	6,85 max
KS	4,5 min
KT	1,016 ± 0,076
KU	0,63 max
KV	0,4 min
KW	13,4 min

Fig. 11 Base JEDEC B8-288.

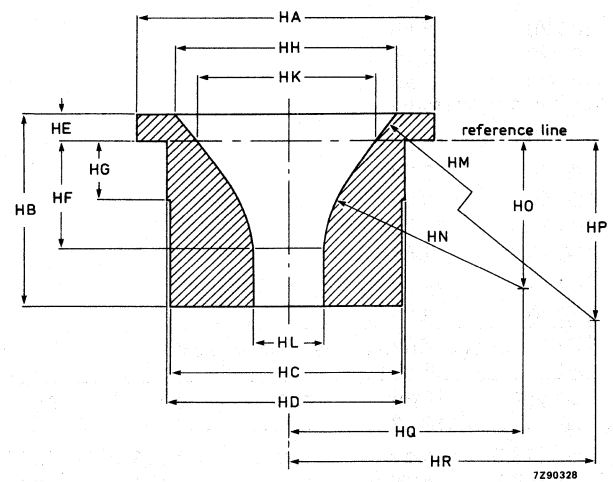

Dimensions in mm

HA	ϕ 100,00
HB	65,00
HC	ϕ 78,70
HD	ϕ 80,00
HE	9,20 ± 0,02
HF	36,22 ± 0,02
HG	20,00
HH	ϕ 75,48 ± 0,02
HK	ϕ 60,77 ± 0,02
HL	ϕ 23,90 $^{+0,04}_{-0}$
HM	R220,00
HN	R70,00
HO	50,30
HP	132,71
HQ	80,52
HR	205,85

Fig. 12 Reference line gauge; G-R90CJ10.

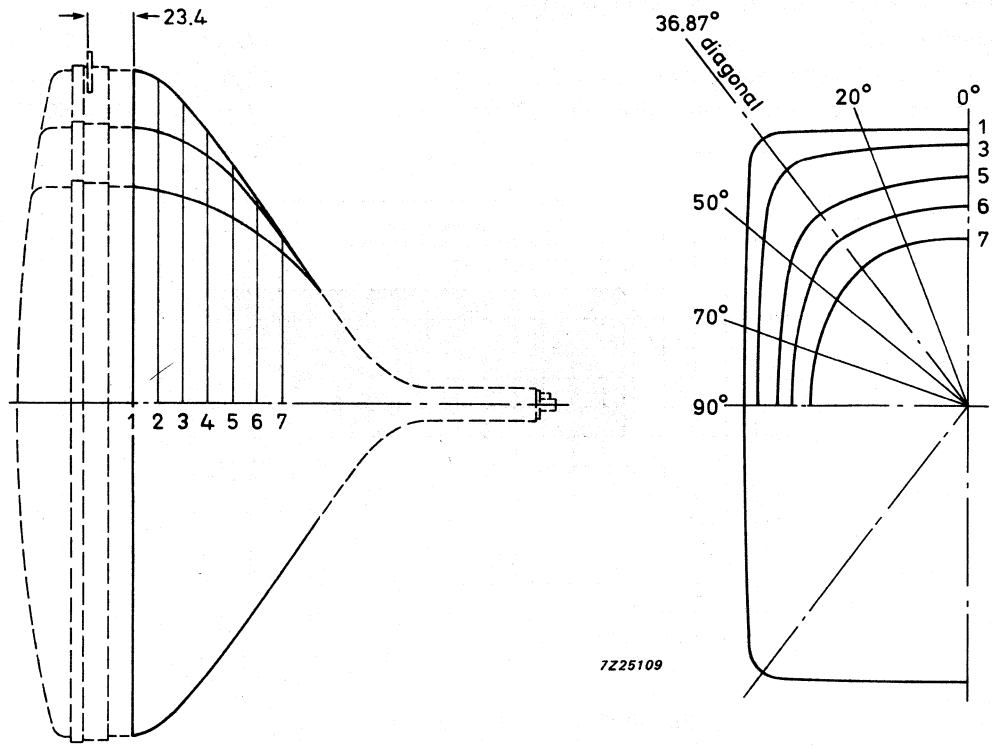

Fig. 13 Maximum cone contour.

Table 2 Cone contour data

section	nom. distance from section 1	distance from centre (max. values)					
		0°	20°	diag.	50°	70°	90°
1	0	163,3	173,0	195,8	166,9	138,2	130,3
2	20	159,1	168,5	188,0	161,1	134,5	127,2
3	40	149,2	154,4	165,5	148,2	127,5	121,5
4	60	133,5	136,4	140,0	131,2	117,4	113,0
5	80	110,7	111,9	112,6	108,7	102,3	100,0
6	100	82,2	82,7	82,7	82,0	80,8	80,2
7	115	58,3	58,3	58,3	58,3	58,5	58,7

TYPICAL OPERATING CONDITIONS

The voltages are specified with respect to grid 1.

Anode voltage	$V_{a,g4}$	23 kV
Grid 3 (focusing electrode) voltage	V_{g3}	6,7 to 7,6 kV
Grid 2 voltage for a spot cut-off voltage V_k = 120 V	V_{g2}	310 to 650 V

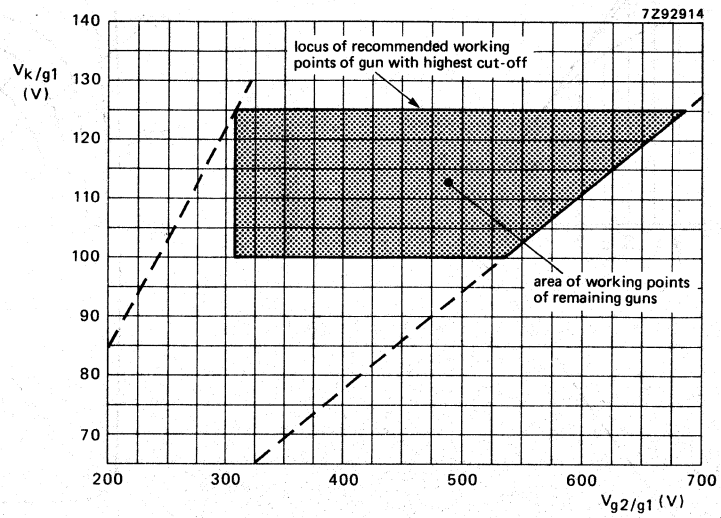

Fig. 14 Spot cut-off design chart.

Grid 2 voltage (V_{g2}) adjusted for highest gun spot cut-off voltage V_k = 125 V.

Remaining guns adjusted for spot cut-off by means of cathode voltage

V_{g2} range 310 to 685 V;

V_k range 100 to 125 V.

Adjustment procedure:

Set the cathode voltage (V_k) for each gun at 125 V; increase the grid 2 voltage (V_{g2}) from approx. 300 V to the value at which one of the colours become just visible. Now decrease the cathode voltage of the remaining guns so that the other colours also become visible.

EQUIPMENT DESIGN VALUES

The values are valid for anode voltages between 20 and 27,5 kV.
The voltages are specified with respect to grid 1.

Grid 3 (focusing electrode) voltage	V_{g3}	29 to 33% of anode voltage
Grid 2 voltage and cathode voltage for visual extinction of focused spot	V_{g2} and V_k	see Fig. 14
Difference in cut-off voltages between guns in any tube	ΔV_k	lowest value > 80% of highest value
Heater voltage	V_f	6,3 V at zero beam current
Video drive characteristics		see graphs
Grid 3 (focusing electrode) current	I_{g3}	−2 to + 2 μA
Grid 2 current	I_{g2}	−2 to + 2 μA
Grid 1 current under cut-off conditions	I_{g1}	−2 to + 2 μA

To produce white of 6500K + 7 M.P.C.D.
(CIE co-ordinates x = 0,313, y = 0,329)

Percentage of the total anode current supplied by each gun (typical)

red gun	38,3%
green gun	35,8%
blue gun	25,9%

Ratio of anode currents

red gun to green gun	min.	0,8
	average	1,1
	max.	1,4
red gun to blue gun	min.	1,1
	average	1,5
	max.	1,9
blue gun to green gun	min.	0,5
	average	0,7
	max.	0,9

LIMITING VALUES (Design maximum rating system unless otherwise stated)

The voltages are specified with respect to grid 1.

Anode voltage	$V_{a,g4}$	max.	27,5	kV	notes 1, 2, 3
		min.	20	kV	notes 1 and 4
Long-term average current for three guns	I_a	max.	750	μA	note 5
Grid 3 (focusing electrode) voltage	V_{g3}	max.	11	kV	
Grid 2 voltage, peak	V_{g2p}	max.	1000	V	
Cathode voltage					
positive	V_k	max.	400	V	
positive operating cut-off	V_k	max.	200	V	
negative	$-V_k$	max.	0	V	
negative peak	$-V_{kp}$	max.	2	V	
Heater voltage	V_f		6,3 V $^{+5}_{-10}$	%	notes 1 and 6
Heater-cathode voltage					
heater negative with respect to cathode after equipment warm-up period	V_{kf}	max.	200	V	
heater positive with respect to cathode	$-V_{kfp}$	peak	200	V	note 1
	$-V_{kf}$	max. (DC component value)	0	V	

Notes

1. Absolute maximum rating system.
2. The picture tube does not emit X-radiation above 1 μSv/h when operated within its absolute maximum ratings.
3. During adjustment on the production line this value is likely to be surpassed considerably. It is therefore strongly recommended to first make the necessary adjustments for normal operation without picture tube.
4. Operation of the tube at lower voltages impairs the luminance and resolution.
5. The short-term average anode current should be limited by circuitry to 1000 μA.
6. For maximum cathode life and optimum performance, it is recommended that the heater supply be designed for 6,3 V at zero beam current.

FLASHOVER PROTECTION

With the high voltage used with this tube (max. 27,5 kV) internal flashovers may occur. As a result of the Soft-Flash technology these flashover currents are limited to approx. 60 A offering higher set reliability, optimum circuit protection and component savings.
Primary protective circuitry using properly grounded spark gaps and series isolation resistors (preferably carbon composition) is still necessary to prevent tube damage. The spark gaps should be connected to all picture tube electrodes at the socket according to the figure below; they are not required on the heater pins. No other connections between the outer conductive coating and the chassis are permissible.
The spark gaps should be designed for a breakdown voltage at the focusing electrode (g3) of 12 kV (1,5 x V_{g3} max. at $V_{a,g4}$ = 25 kV), and at the other electrodes of 1,5 to 2 kV.
The values of the series isolation resistors should be as high as possible (min. 1,5 kΩ) without causing deterioration of the circuit performance. The resistors should be able to withstand an instantaneous surge of 20 kV for the focusing circuit and 12 kV for the remaining circuits without arcing.
Additional information is available on request.

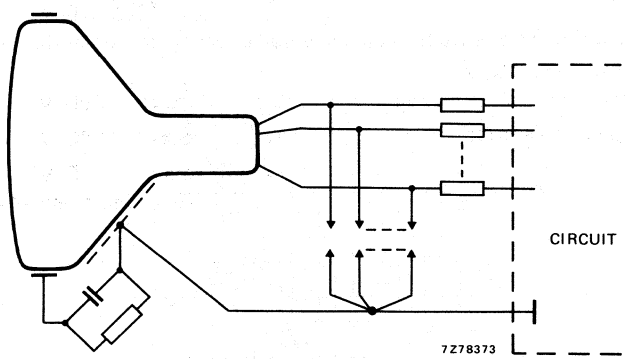

Fig. 15 Flashover protection circuit.

CENTRING ERROR

Maximum centring error in any direction after colour purity, static convergence, and horizontal centre line correction, measured with deflection coils in nominal position	3 mm

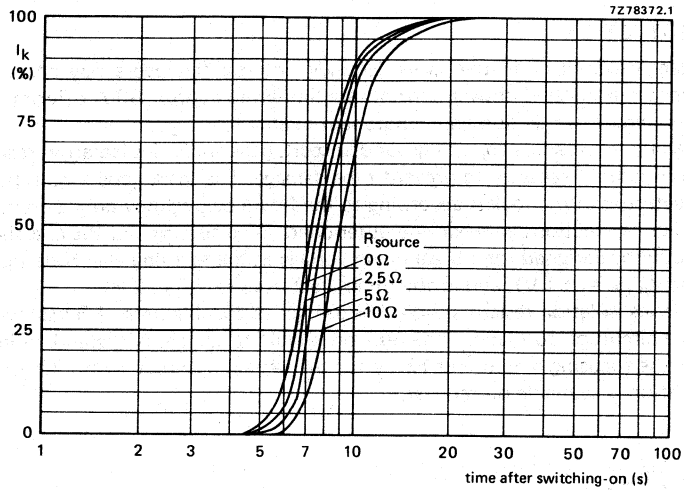

Fig. 16 Cathode heating time after switching on, measured under typical operating conditions.

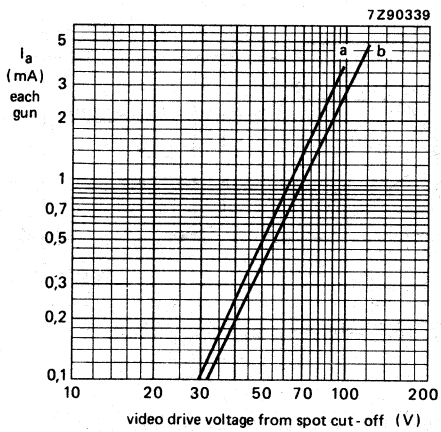

Fig. 17 Typical cathode drive characteristics.

V_f = 6,3 V;

$V_{a,g4}$ = 23 kV;

V_{g3} adjusted for focus;

V_{g2} (each gun) adjusted to provide spot cut-off for V_k = 100 V (curve a), and V_k = 125 V (curve b).

For optimum picture performance it is recommended that the cathodes are not driven below + 1 V.

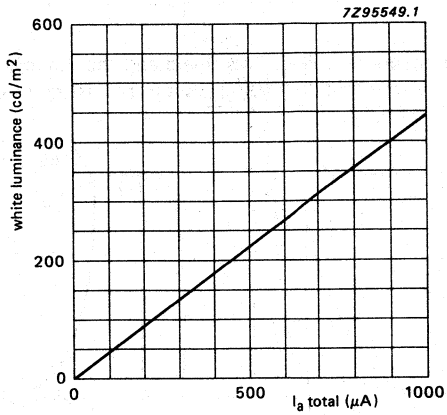

Fig. 18 Luminance at the centre of the screen as a function of I_{total}.

$V_{a,g4}$ = 23 kV.
Scanned area = 284,5 mm x 213,4 mm;
CIE co-ordinates x = 0,313, y = 0,329.

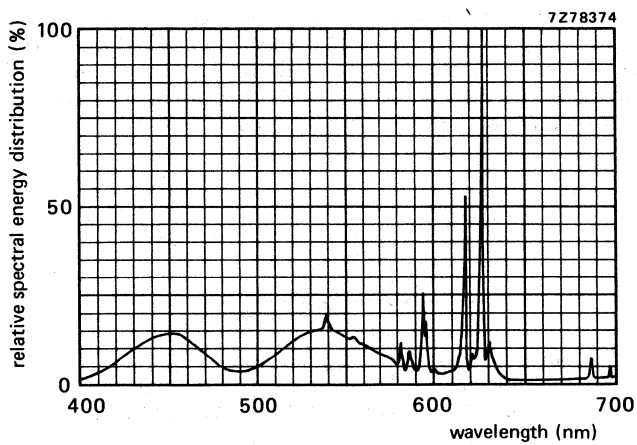

Fig. 19

Simultaneous excitation of red, green and blue phosphor, measured in a tube, to produce white of x = 0,313, y = 0,329. Exact shape of the peaks depends on the resolution of the measuring apparatus.

Colour co-ordinates:	x	y
red	0,635	0,340
green	0,315	0,600
blue	0,150	0,060

DEGAUSSING

The picture tube has an internal magnetic shield. This shield and the shadow mask with its suspension system may be provided with an automatic degaussing system, consisting of one magnetic coil winding mounted on the cone of the picture tube.

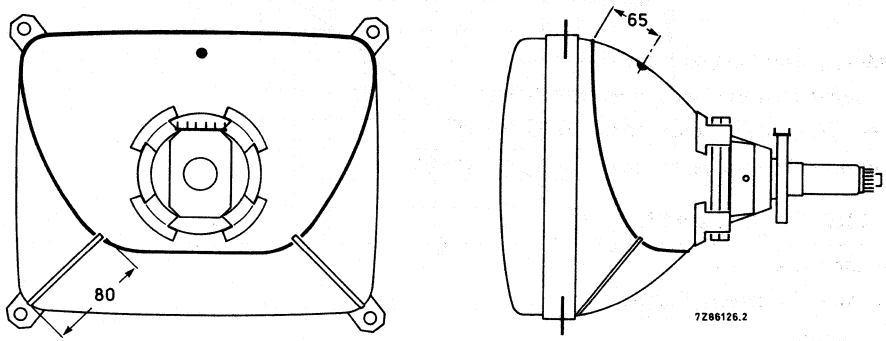

Fig. 20 Position of degaussing coil on the picture tube; dimensions are given in mm.

For proper degaussing an initial magnetomotive force (MMF) of 600 ampere-turns is required in the coil. This MMF has to be gradually decreased by appropriate degaussing circuitry. In the steady state, no significant MMF should remain in the coil ($\leqslant$ 0,6 ampere-turns). If single-phase power rectification is employed in the TV circuitry, provision should be included to prevent asymmetric distortion of the AC voltage applied to the degaussing circuit due to high DC inrush currents. An example of a degaussing circuit and coil data for various mains voltages are given below.

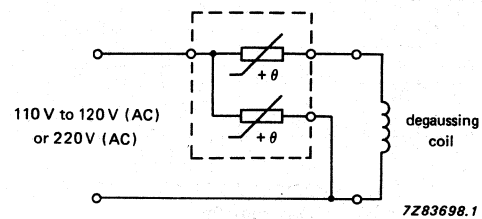

Fig. 21 Degaussing circuit using dual PTC thermistor.

Table 3 Data of degaussing coil

	110 V (AC) mains	220 V (AC) mains
Circumference	90 cm	90 cm
Number of turns	60	120
Copper wire diameter	0,45 mm	0,3 mm
Resistance	6 Ω	27 Ω
Catalogue number of appropriate dual PTC thermistor	2322 662 98013	2322 662 98009

FLAT SQUARE COLOUR PICTURE TUBE ASSEMBLY

- Factory preset tube/coil assembly
- Self-converging and raster correction free
- 36 cm, 90° colour picture tube A36EAM00X
- Hybrid saddle toroidal deflection unit AT6060/00

QUICK REFERENCE DATA

Deflection angle	90 °
Minimum useful screen diagonal	36 cm
Overall length	340 mm
Neck diameter	22,5 mm

MECHANICAL DATA

Dimensions in mm

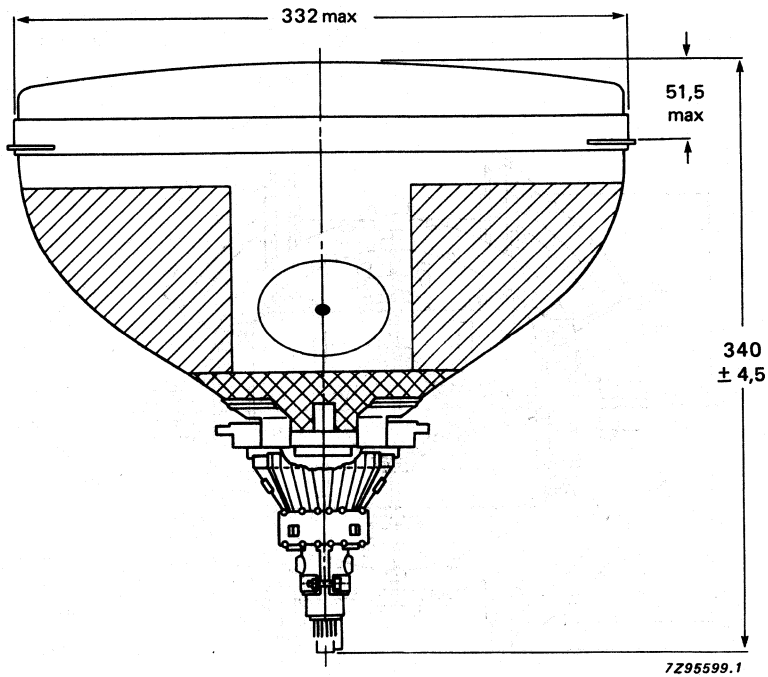

Fig. 1 Colour picture tube assembly.

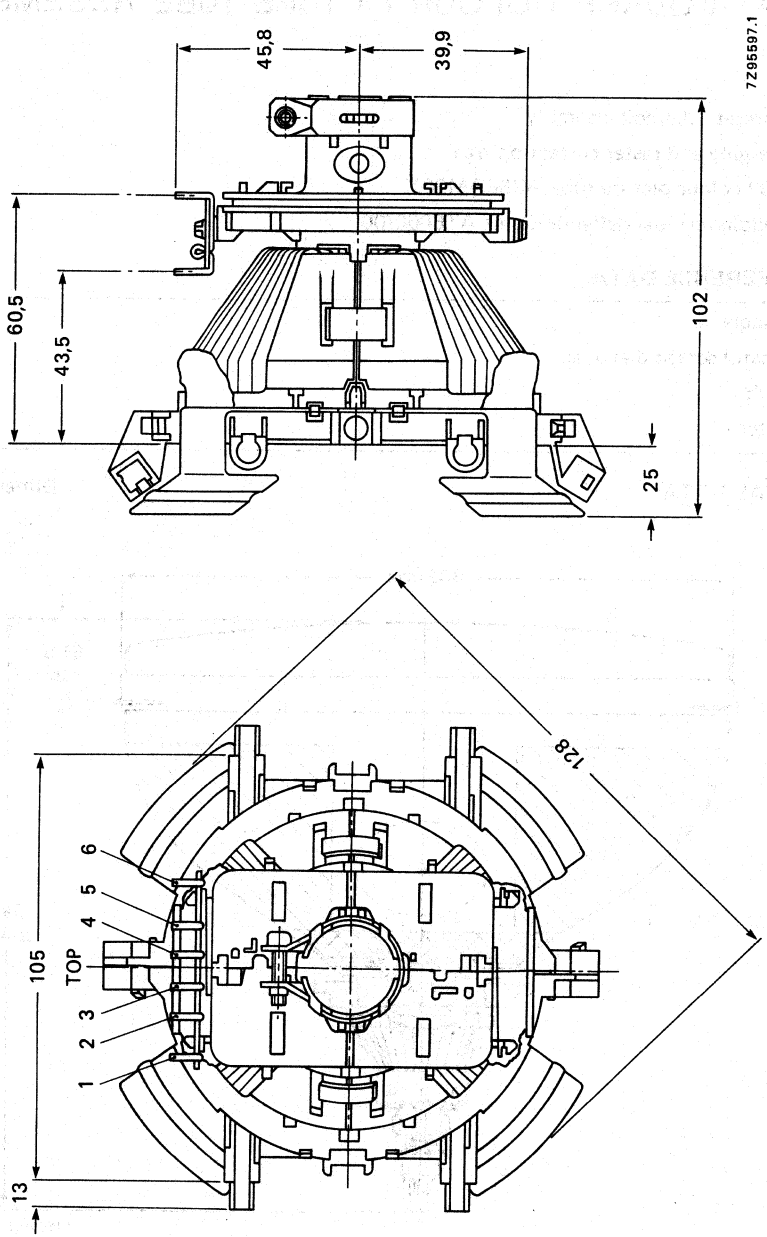

Fig. 2 Deflection unit AT6060/00.

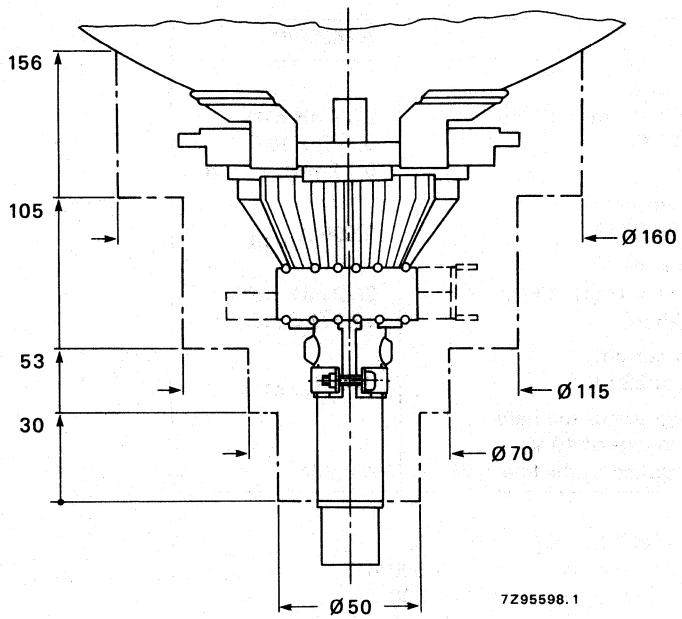

Fig. 3 Yoke clearance.

Maximum operating temperature (average copper temperature measured with resistance method)	+ 90 °C
Storage temperature range	−25 to +90 °C
Flame retardent	according to UL 1413, category 94-V1
Torque on neck clamp screw	1,0 Nm

ENVIRONMENTAL TEST SPECIFICATIONS OF DEFLECTION UNITS

Vibration	IEC 68-2-6 (test Fc)
Shock	IEC 68-2-27 (test Ea)
Bump	IEC 68-2-29 (test Eb; 25g)
Cold	IEC 68-2-1 (test Ab)
Dry heat	IEC 68-2-2 (test Bb)
Damp heat, steady state	IEC 68-2-3 (test Ca)
Cyclic damp heat	IEC 68-2-30 (test Db)
Change of temperature	IEC 68-2-14 (test Nb)

ELECTRICAL DATA OF DEFLECTION UNIT

parameter	AT6060/00
Line deflection coils	
inductance at 1 V (rms), 1 kHz	2,43 mH ± 4%
resistance at 25 °C	3,2 Ω ± 10%
magnetic flux	5,14 mWb ± 2,5%
Line deflection current, edge to edge, at 23 kV	2,095 $A_{(p-p)}$
Field deflection coils	
inductance at 1 V (rms), 1 kHz	26,2 mH ± 10%
resistance at 25 °C	12,2 Ω ± 7%
Field deflection current, edge to edge, at 23 kV	0,82 $A_{(p-p)}$
Cross-talk: voltage across the field coils when a voltage of 10 V, 15625 Hz is applied to the line coils	< 0,2 V

Insulation resistance at 1 kV (DC)

between line and field coils	> 500 MΩ
between line coil and core clamp	> 500 MΩ
between field coil and core clamp	> 10 MΩ

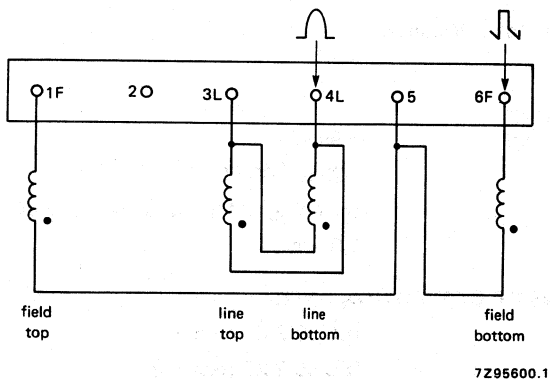

Fig. 4 Connection diagram.

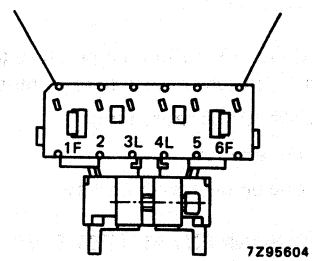

Fig. 5 Terminal Location.

The beginning of the windings is indicated with ●.

Hi-Bri COLOUR PICTURE TUBE

- 90° deflection
- In-line gun, electrostatic bi-potential focus
- 29,1 mm neck diameter
- Hi-Bri screen with pigmented phosphor featuring high brightness and increased contrast performance
- Soft-Flash technology offering improved set reliability
- Slotted shadow mask optimized for minimum moiré
- Fine pitch over entire screen
- Phosphor lines follow glass contour
- Quick-heating cathodes
- Internal magnetic shield
- Reinforced envelope for push-through mounting
- Anti-crackle coating
- When combined with an appropriate hybrid saddle toroidal deflection unit (e.g. AT1205), it forms a self-converging assembly; dynamic convergence is not required.

QUICK REFERENCE DATA

Deflection angle	90°
Face diagonal	37 cm
Overall length	337,5 mm
Neck diameter	29,1 mm
Heating	6,3 V, 685 mA
Anode voltage	25 kV
Focusing voltage	20% of anode voltage

ELECTRON-OPTICAL DATA

Electron gun system		unitized triple-aperture electrodes
Focusing method		electrostatic
Focus lens		bi-potential
Deflection method		magnetic
Deflection angles		
diagonal		approx. 90°
horizontal		approx. 78°
vertical		approx. 60°

ELECTRICAL DATA

Capacitances		
anode to external conductive coating including rimband	$C_{a(m+m')}$	> 800 pF
grid 1 to all other electrodes	C_{g1}	15 pF
cathode of each gun to all other electrodes	C_{kR}, C_{kG}, C_{kB}	5 pF
focusing electrode to all other electrodes	C_{g3}	6 pF
Heating		indirect by AC or DC
heater voltage	V_f	6,3 V
heater current	I_f	685 mA

OPTICAL DATA

Screen	metal-backed vertical phosphor stripes; phosphor lines follow glass contour
Screen finish	satinized
Useful screen dimensions	
diagonal	min. 335,4 mm
horizontal axis	min. 280,8 mm
vertical axis	min. 210,6 mm
area	min. 580 cm^2
Phosphors	
red	pigmented europium activated rare earth
green	sulphide type
blue	pigmented sulphide type
Centre-to-centre distance of vertical identical colour phosphor stripes, at screen centre	0,65 mm
Light transmission of face glass at centre	68%

MECHANICAL DATA (see Figs 1 to 9)

Overall length	337,4 ± 5 mm
Neck diameter	$29{,}1\ ^{+1{,}4}_{-0{,}7}$ mm *
Bulb dimensions	
diagonal	max. 368 mm
width	max. 317 mm
height	max. 248 mm
Base	12-pin base JEDEC B12-262
Anode contact	small cavity contact J1-21, IEC 67-III-2
Mounting position	anode contact on top
Net mass	approx. 6 kg

Handling

During shipment and handling the tube should not be subjected to accelerations greater than 350 m/s^2 in any direction.

* In the region of 70 mm from the neck end, the maximum diameter is 30 mm.

MECHANICAL DATA (continued)

Dimensions in mm

Notes are given after the drawings.

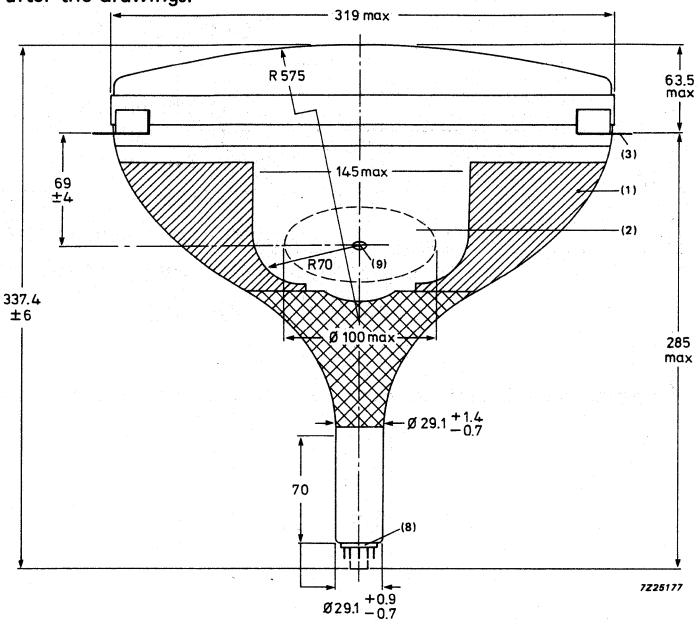

Fig. 1.

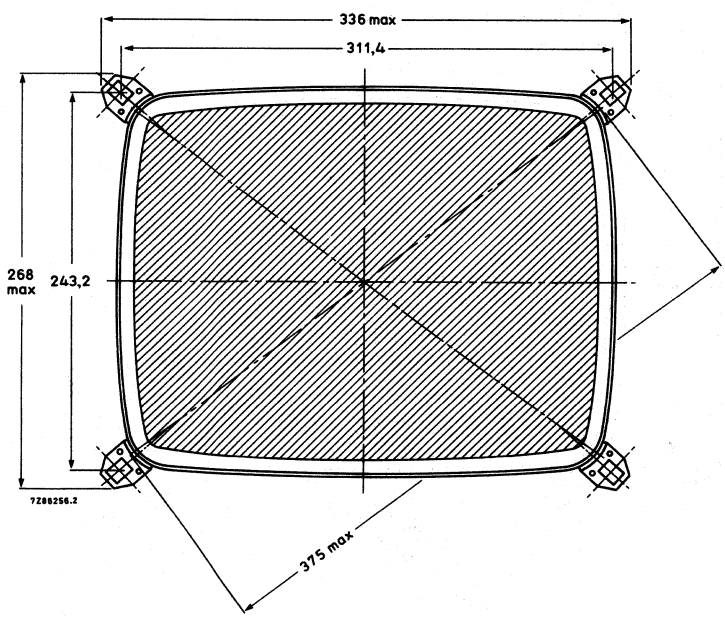

Fig. 2.

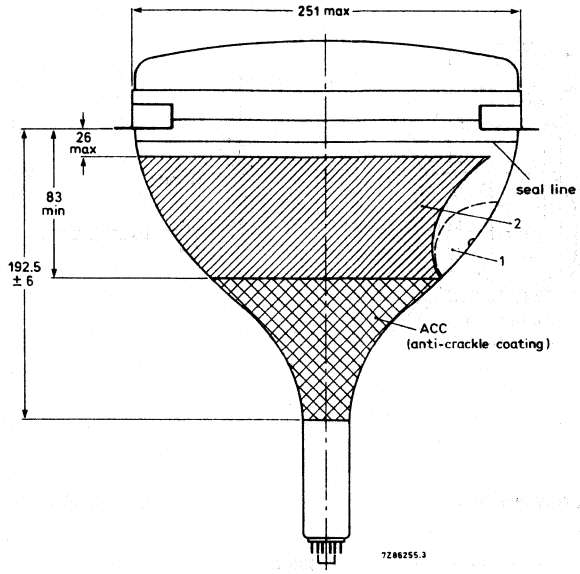
251 max
26
max
83
min
192.5
± 6
seal line
2
1
ACC
(anti-crackle coating)
7Z86255.3

Fig. 3

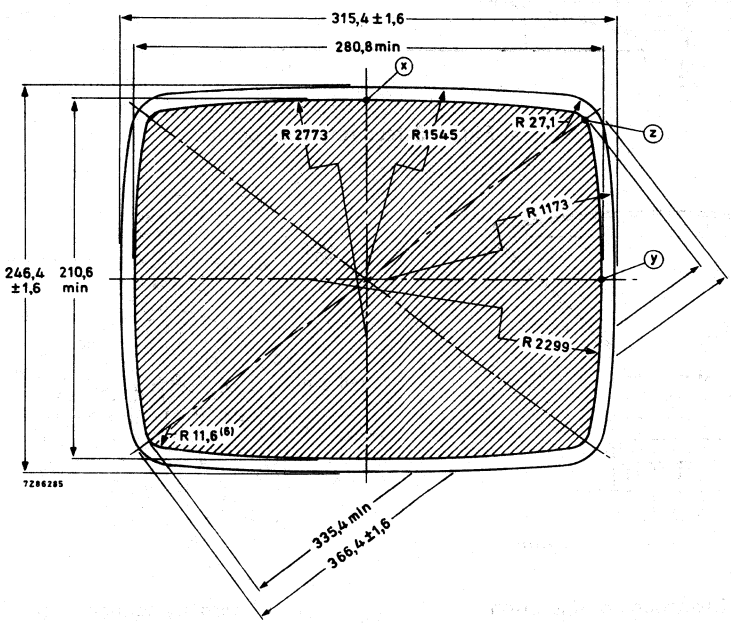
315,4 ± 1,6
280,8 min
x
R 2773
R 1545
R 27,1
z
R 1173
y
246,4
±1,6
210,6
min
R 2299
R 11,6 (6)
7Z86285
335,4 min
366,4 ± 1,6

Fig. 4.

MECHANICAL DATA (continued)

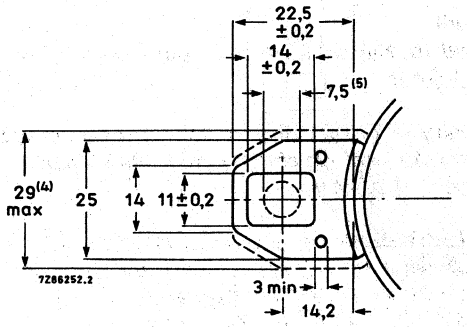

Fig. 5 Lug dimensions.

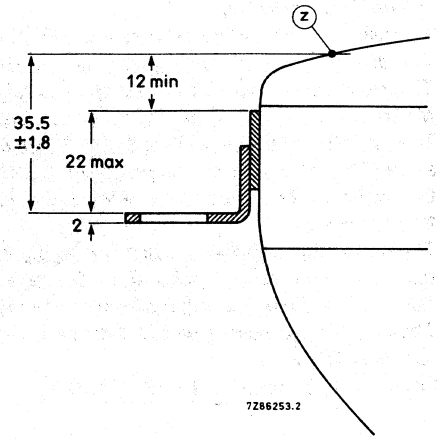

Fig. 6 Lug position.

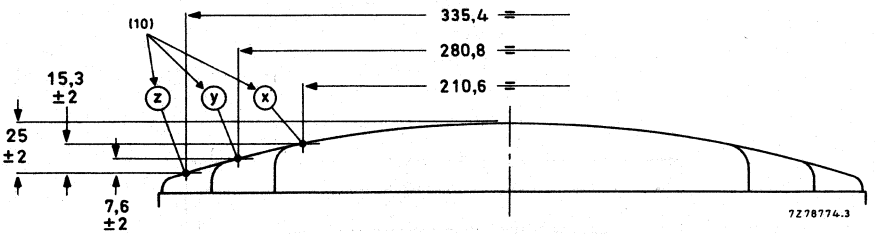

Fig. 7 Screen reference points.

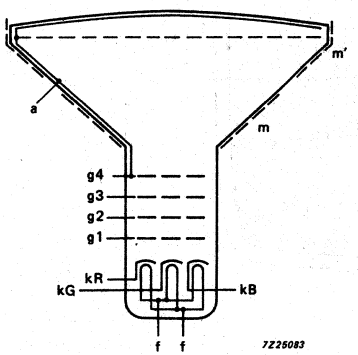

Fig. 8 Electrode configuration.

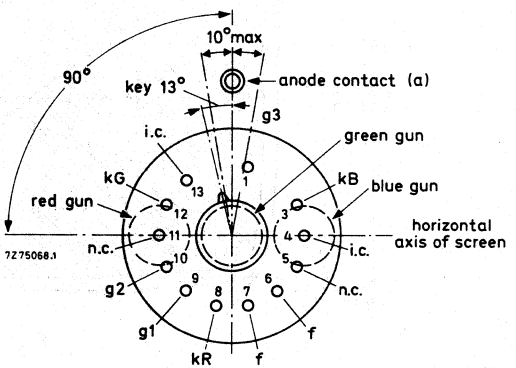

i.c. = internally connected (not to be used)
n.c.= not connected
Fig. 9 Pin arrangement.

Notes to outline drawings

1. Configuration of outer conductive coating may be different, but will contain the contact area as shown in the drawing.
2. To clean this area, wipe only with a soft lintless cloth.
3. The displacement of any lug with respect to the plane through the three other lugs is max. 1,5 mm. This deviation is incorporated in the tolerance of ± 1,8 mm.
4. Minimum space to be reserved for mounting lug.
5. The position of the mounting screw in the cabinet must be within a circle of 7,5 mm diameter drawn around the true geometrical positions, i.e. the corners of a rectangle of 311,4 mm x 243,2 mm.
6. Co-ordinates for radius R = 11,6 mm: x = 126,98 mm, y = 90,76 mm.
7. Not applicable.
8. The socket for this base should not be rigidly mounted; it should have flexible leads and be allowed to move freely. After mounting of the tube in the cabinet note that the position of the base can fall within a circle, having a diameter of max. 50 mm, concentric with an imaginary tube axis. The mass of the mating socket with circuitry should not be more than 150 g, maximum permissible torque is 40 mNm.
9. Small cavity contact J1-21, IEC67-III-2,

Maximum cone contour

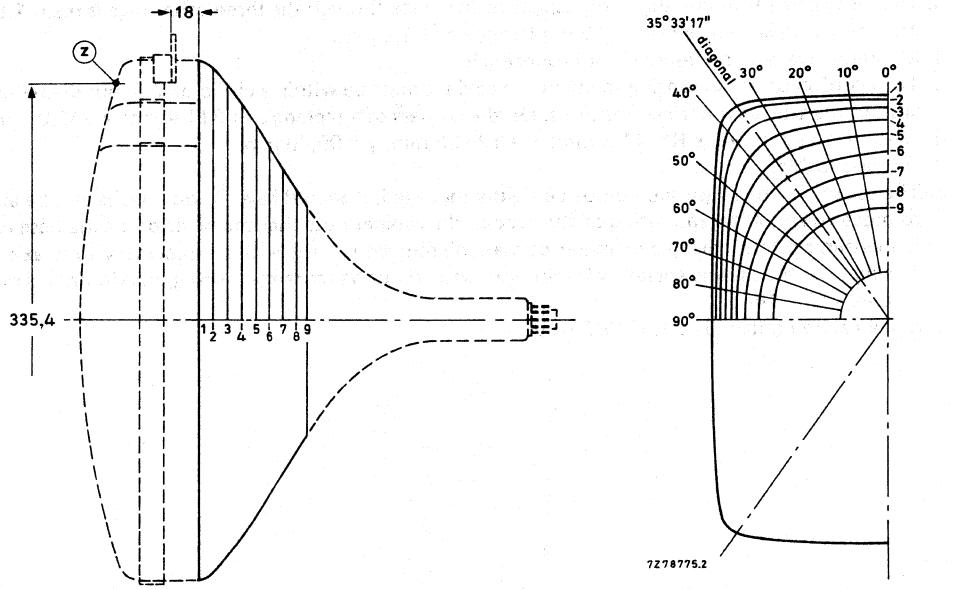

Fig. 10 Cone contour.

Table 1 Cone contour data

Dimensions in mm

section	nom. distance from section 1	distance from centre (max. values)														
		0°	10°	20°	25°	30°	32° 30′	diag. axes	37° 30′	40°	45°	50°	60°	70°	80°	90°
1	0	157,2	159,4	166,3	171,7	178,2	181,2	183,6	183,3	180,0	167,9	156,5	140,0	129,8	124,2	122,4
2	10	154,7	156,9	163,5	168,5	174,1	176,6	178,1	177,7	174,8	164,4	153,7	137,8	127,9	122,4	120,7
3	20	148,8	150,7	156,3	160,0	163,5	164,6	165,0	164,4	162,6	156,0	147,7	133,6	124,4	119,3	117,7
4	30	140,4	142,1	146,2	148,6	150,5	151,0	151,1	150,7	149,6	145,6	140,0	128,6	120,3	115,7	114,2
5	40	130,3	131,3	134,0	135,4	136,5	136,8	136,8	136,6	136,1	134,1	130,8	122,7	115,9	111,7	110,3
6	50	118,2	118,8	120,1	120,9	121,6	121,8	122,0	122,0	121,9	121,2	119,8	115,4	110,5	107,0	105,8
7	60	104,9	104,7	105,1	105,5	106,0	106,2	106,5	106,7	106,9	107,1	107,0	105,6	103,1	100,8	99,8
8	70	90,6	89,9	89,8	90,0	90,4	90,6	90,9	91,1	91,4	91,9	92,3	92,5	91,7	90,4	89,7
9	77	79,9	79,1	79,0	79,1	79,4	79,6	79,9	80,1	80,4	80,9	81,4	81,8	81,4	80,5	79,9

12-pin base; JEDEC B12-262

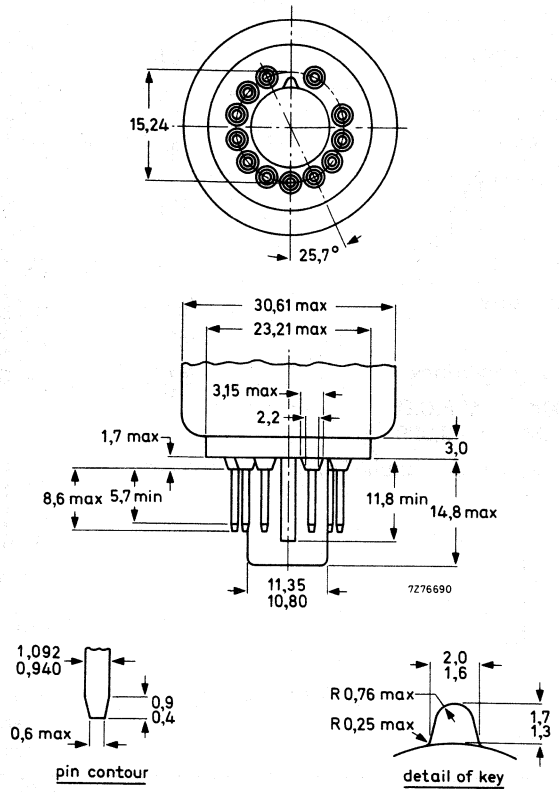

Fig. 11 JEDEC base.

TYPICAL OPERATING CONDITIONS

The voltages are specified with respect to grid 1.

Anode voltage	$V_{a,g4}$	25 kV
Grid 3 (focusing electrode) voltage	V_{g3}	4,7 to 5,5 kV
Grid 2 voltage for a spot cut-off voltage V_k = 120 V	V_{g2}	310 to 560 V
Luminance at the centre of the screen *	L	130 cd/m² ←

* Tube settings adjusted to produce white of 6500K + 7 M.P.C.D. (x = 0,313, y = 0,329), focused raster, current density 0,4 μA/cm².

EQUIPMENT DESIGN VALUES

The values are valid for anode voltages between 20 and 27,5 kV.
The voltages are specified with respect to grid 1.

Grid 3 (focusing electrode) voltage	V_{g3}	18,8 to 22% of anode voltage
Grid 2 voltage and cathode voltage for visual extinction of focused spot	V_{g2} and V_k	see Fig. 13*
Difference in cut-off voltages between guns in any tube	ΔV_k	lowest value > 80% of highest value
Video drive characteristics		see Fig. 14**
Grid 3 (focusing electrode) current	I_{g3}	−5 to + 5 μA
Grid 2 current	I_{g2}	−5 to + 5 μA
Grid 1 current under cut-off conditions	I_{g1}	−5 to + 5 μA

To produce white of 6500K + 7 M.P.C.D.
(CIE co-ordinates x = 0,313, y = 0,329)

Percentage of the total anode current supplied by each gun (typical)		
red gun		38,3%
green gun		35,8%
blue gun		25,9%
Ratio of anode currents		
red gun to green gun	min.	0,8
	average	1,1
	max.	1,4
red gun to blue gun	min.	1,1
	average	1,5
	max.	1,9
blue gun to green gun	min.	0,5
	average	0,7
	max.	0,9

* The common V_{g2} should be adjusted as follows:
Set the cathode voltage, V_k, for each gun at 130 V. Increase the V_{g2} from about 300 V to the value at which the raster of one of the guns becomes just visible. Now decrease the V_k of the remaining guns so that the rasters of these guns also become visible.

** For optimum picture performance it is recommended that the cathodes are not driven below + 10 V.

LIMITING VALUES (Design maximum rating system unless otherwise stated)

The voltages are specified with respect to grid 1.

Anode voltage	$V_{a,g4}$	max.	27,5 kV	notes 1, 2, 3
		min.	20 kV	notes 1 and 4
Long-term average current for three guns	I_a	max.	750 μA	note 5
Grid 3 (focusing electrode) voltage	V_{g3}	max.	7 kV	
Grid 2 voltage, peak	V_{g2p}	max.	1000 V	
Cathode voltage				
positive	V_k	max.	400 V	
positive operating cut-off	V_k	max.	200 V	
negative	$-V_k$	max.	0 V	
negative peak	$-V_{kp}$	max.	2 V	
Heater voltage	V_f	6,3 V	+ 5 % −10 %	notes 1 and 6
Heater-cathode voltage				
heater negative with respect to cathode				
during equipment warm-up period not exceeding 15 s	V_{kf}	max.	450 V	note 1
after equipment warm-up period	V_{kf}	max.	250 V	
heater positive with respect to cathode	$-V_{kfp}$	peak	200 V	note 1
	$-V_{kf}$	max.	0 V (DC component value)	

Notes to the limiting values

1. Absolute maximum rating system.
2. The picture tube does not emit X-radiation above 1 μSv/h when operated within its absolute maximum ratings. ←
3. During adjustment on the production line this value is likely to be surpassed considerably. It is therefore strongly recommended to first make the necessary adjustments for normal operation without picture tube.
4. Operation of the tube at lower voltages impairs the luminance and resolution.
5. The short-term average anode current should be limited by circuitry to 1000 μA.
6. For maximum cathode life and optimum performance, it is recommended that the heater supply be designed for 6,3 V at zero beam current.

FLASHOVER PROTECTION

With the high voltage used with this tube (max. 27,5 kV) internal flashovers may occur. As a result of the Soft-Flash technology these flashover currents are limited to approx. 60 A offering higher set reliability, optimum circuit protection and component savings.
Primary protective circuitry using properly grounded spark gaps and series isolation resistors (preferably carbon composition) is still necessary to prevent tube damage. The spark gaps should be connected to all picture tube electrodes at the socket according to the figure below; they are not required on the heater pins. No other connections between the outer conductive coating and the chassis are permissible.
The spark gaps should be designed for a breakdown voltage at the focusing electrode (g3) of 8,5 kV ($1{,}5 \times V_{g3}$ max. at $V_{a,g4} = 25$ kV), and at the other electrodes of 1,5 to 2 kV.
The values of the series isolation resistors should be as high as possible (min. 1,5 kΩ) without causing deterioration of the circuit performance. The resistors should be able to withstand an instantaneous surge of 20 kV for the focusing circuit and 12 kV for the remaining circuits without arcing.
Additional information is available on request.

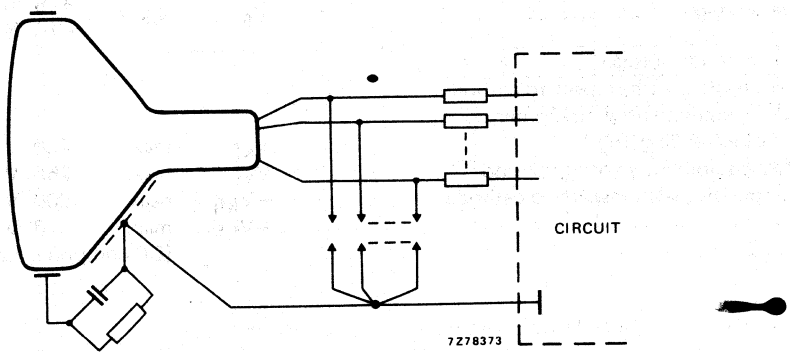

Fig. 12 Flashover protection circuit.

BEAM CORRECTIONS

Maximum required correction for register, as measured at the centre of the screen in any direction	0,08 mm
Centre convergence displacement of the blue and red beams is contained within a circle; max. diameter of circle	4 mm
Centre convergence displacement between the green beam and converged blue and red beams is contained within a circle; maximum diameter of circle	2 mm
Maximum centring error in any direction after colour purity, static convergence, and horizontal centre line correction, measured with deflection coils in nominal position	5 mm

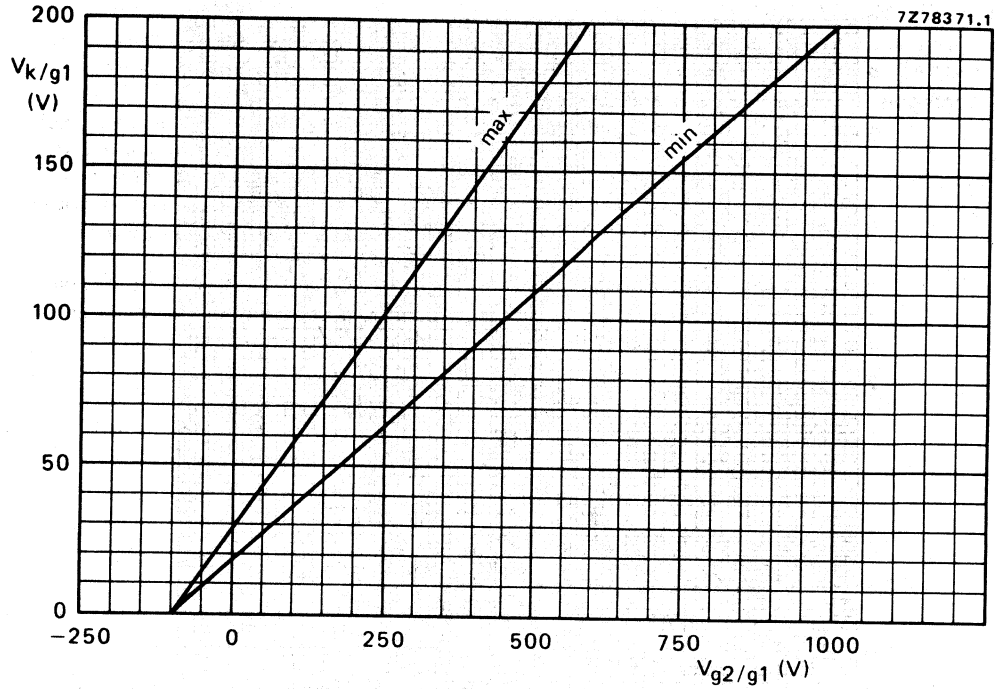

Fig. 13 Spot cut-off design chart (cathode drive), V_{g3} adjusted for focus, $V_{a,g4}$ = 20 to 27,5 kV.

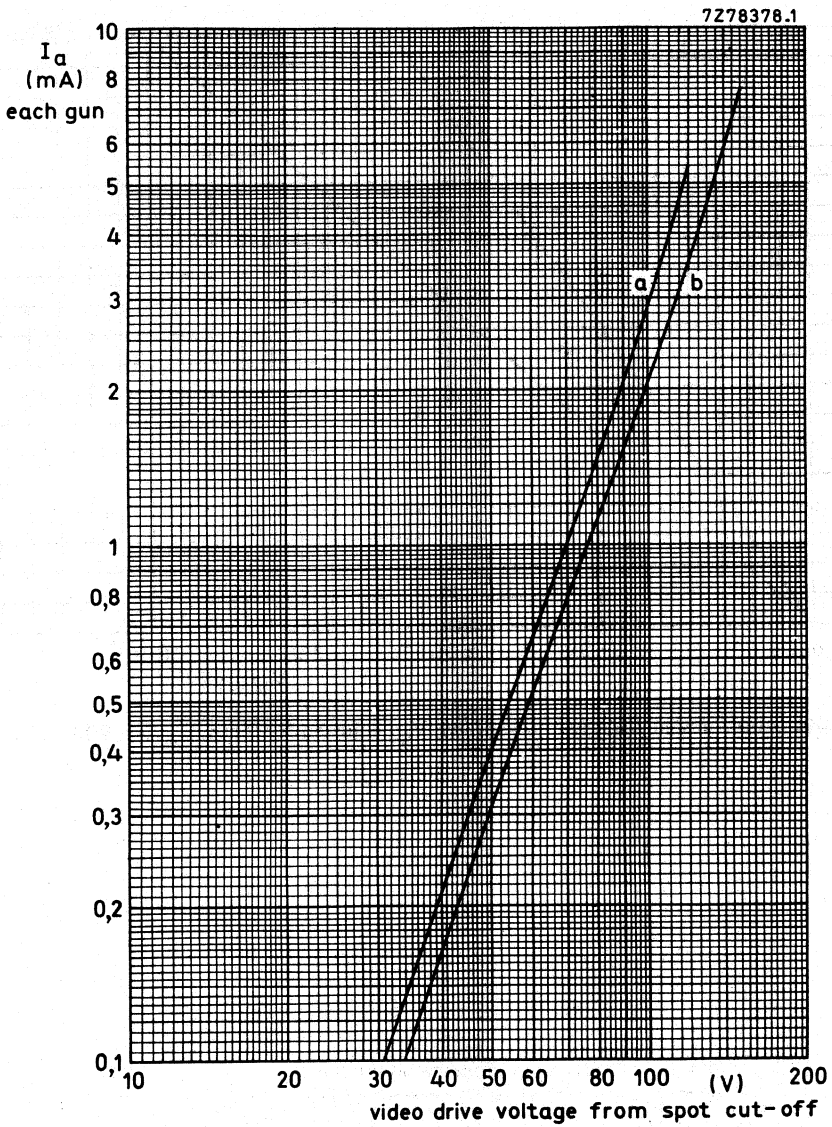

Fig. 14 Typical cathode drive characteristics.

V_f = 6,3 V;
$V_{a,g4}$ = 25 kV;
V_{g3} adjusted for focus;
V_{g2} adjusted to provide spot cut-off for desired fixed V_k.

curve a = spot cut-off = 120 V;
curve b = spot cut-off = 150 V.

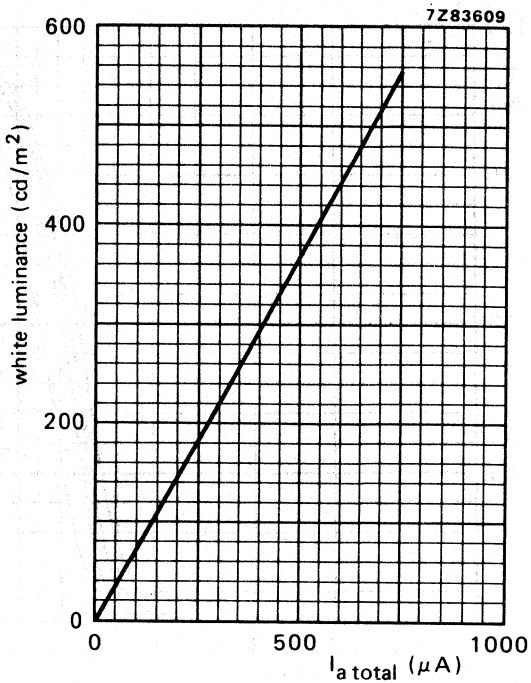

Fig. 15 Luminance at the centre of the screen as a function of I_{total}.
$V_{a,g4}$ = 25 kV, V_f = 6,3 V, V_{g3} adjusted for optimum focus.
Scanned area = 280,8 mm x 210,6 mm;
CIE co-ordinates x = 0,313, y = 0,329.

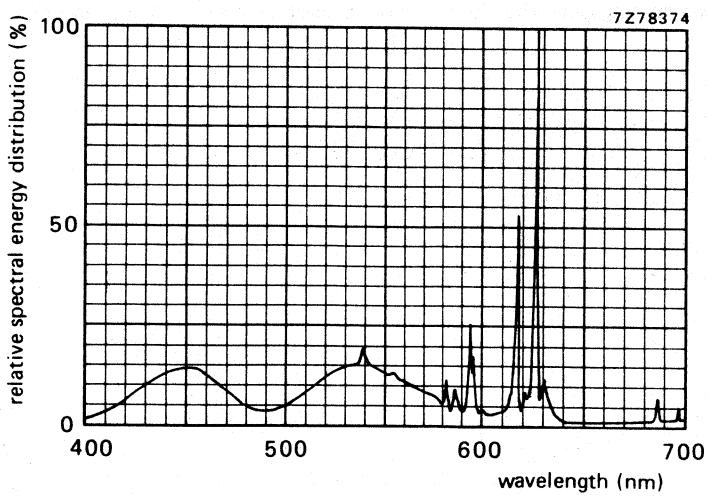

Fig. 16 Simultaneous excitation of red, green and blue phosphor, measured in a tube, to produce white of x = 0,313, y = 0,329. Exact shape of the peaks depends on the resolution of the measuring apparatus.

Colour co-ordinates:	x	y
red	0,635	0,340
green	0,315	0,600
blue	0,150	0,060

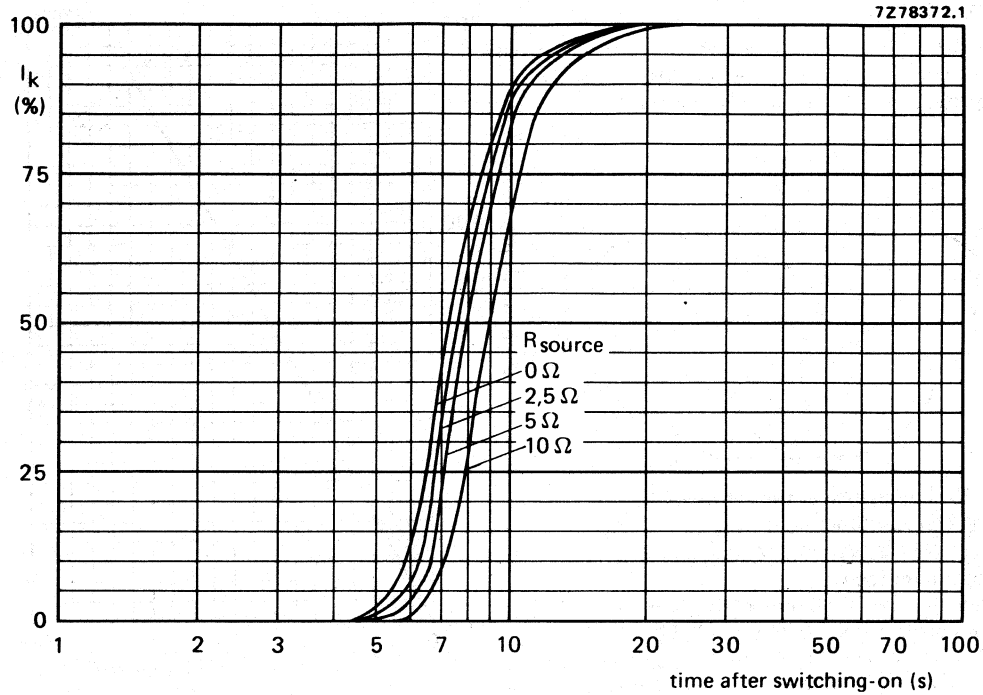

Fig. 17 Cathode heating time after switching on, measured under typical operating conditions.

DEGAUSSING

The picture tube is provided with an internal magnetic shield. This shield and the shadow mask with its suspension system may be provided with an automatic degaussing system, consisting of one magnetic coil winding mounted on the cone of the picture tube.

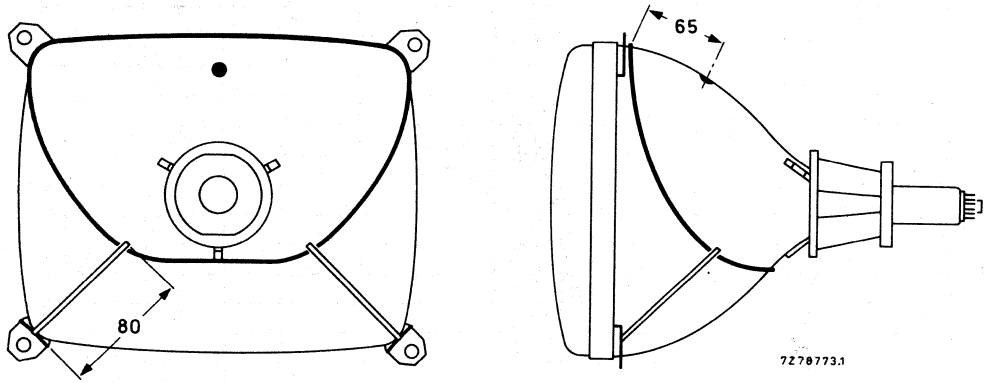

Fig. 18 Position of degaussing coil on the picture tube.

For proper degaussing an initial magnetomotive force (MMF) of 600 ampere-turns is required in the coil. This MMF has to be gradually decreased by appropriate degaussing circuitry. In the steady state, no significant MMF should remain in the coil ($\leqslant$ 0,6 ampere-turns). If single-phase power rectification is employed in the TV circuitry, provision should be included to prevent asymmetric distortion of the AC voltage applied to the degaussing circuit due to high DC inrush currents. An example of a degaussing circuit and coil data for various mains voltages are given below.

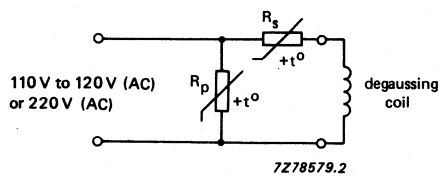

Fig. 19 Degaussing circuit using dual PTC thermistor.

Data of degaussing coil

	110 V (AC) mains	220 V (AC) mains
Circumference	90 cm	90 cm
Number of turns	70	120
Copper-wire diameter	0,45 mm	0,3 mm
Resistance	6,7 Ω	25,9 Ω
Catalogue number of appropriate dual PTC thermistor	8222 298 73091	2322 662 98009

COLOUR PICTURE TUBE ASSEMBLY

- Factory preset tube/coil assembly
- Self-converging and raster correction free
- 37 cm, 90° colour picture tube A37-573X
- Hybrid saddle toroidal deflection unit AT1205/10

QUICK REFERENCE DATA

Deflection angle	90°
Minimum useful screen diagonal	37 cm
Overall length	338 mm
Neck diameter	29.1 mm

MECHANICAL DATA

Dimensions in mm

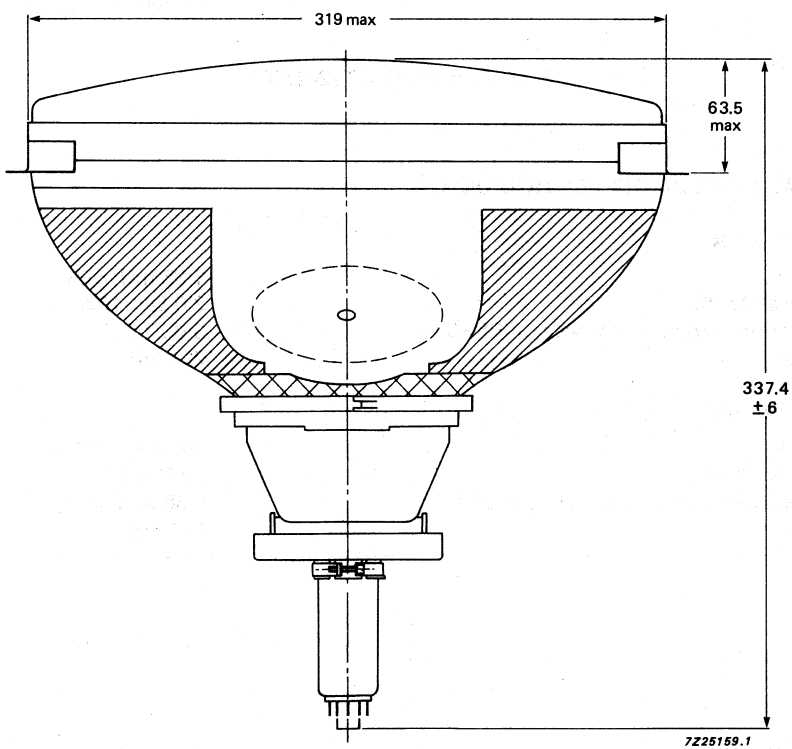

Fig. 1 Colour picture tube assembly A37-573X0510.

MECHANICAL DATA

Dimensions in mm

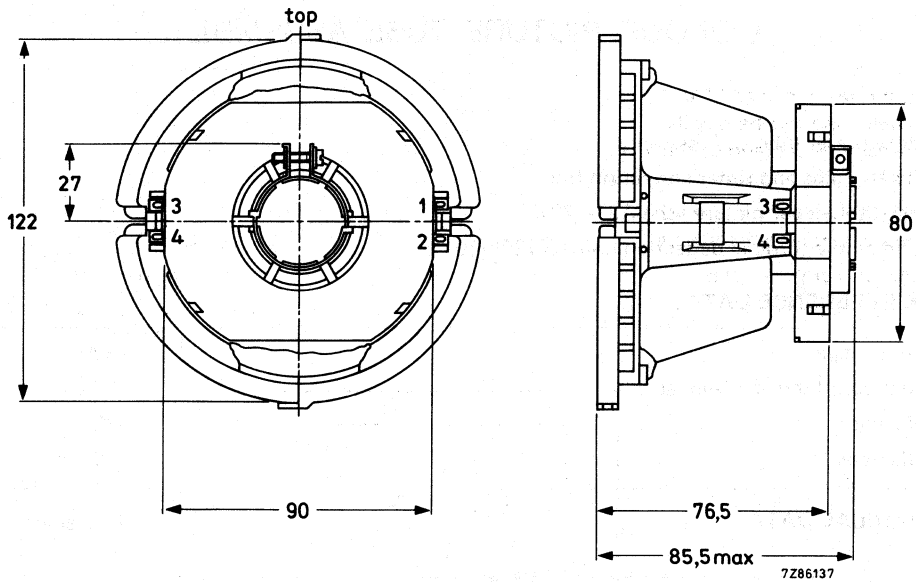

Fig. 2 Deflection unit AT1205/10.

ELECTRICAL DATA OF DEFLECTION UNIT

Line deflection coils

Inductance	1.85 mH ± 5%
Resistance at 25 °C	2.0 Ω ± 10%
Line deflection current, raster scan, at 25 kV	3.0 A(p-p)
Raster scan	281 mm

Field deflection coils

Inductance	109 mH ± 10%
Resistance at 25 °C	50 Ω ± 7%
Field deflection current, raster scan, at 25 kV	0.38 A(p-p)
Raster scan	211 mm

Cross-talk	a voltage of 10 V, 15750 Hz applied to the line coils causes no more than 0.20 V across the field coils (damping resistors included)
Insulation resistance at 1 kV DC	
between line and field coils	> 500 MΩ
between line coil and core clamp	> 500 MΩ
between field coil and core clamp	> 10 MΩ
Maximum operating temperature (average copper temperature)	+90 °C
Storage temperature range	−25 to +90 °C
Flame retardent	according to UL 413, category 94V-1

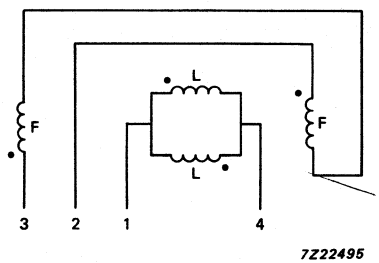

Fig. 3 Connection diagram. L = line coils; F = field coils.

The beginning of the windings is indicated with ●.

ENVIRONMENTAL TEST SPECIFICATIONS OF DEFLECTION UNITS

Vibration	IEC 68-2-6 (test Fc)
Shock	IEC 68-2-27 (test Ea)
Bump	IEC 68-2-29 (test Eb; 25g)
Cold	IEC 68-2-1 (test Ab)
Dry heat	IEC 68-2-2 (test Bb)
Damp heat, steady state	IEC 68-2-3 (test Ca)
Cyclic damp heat	IEC 68-2-30 (test Db)
Change of temperature	IEC 68-2-14 (test Nb)

Hi-Bri COLOUR PICTURE TUBE

- 90° deflection
- In-line gun, thermally stable; electrostatic hi-bi potential focus
- 29,1 mm neck diameter
- Hi-Bri screen with pigmented phosphor featuring high brightness and increased contrast performance
- Soft-Flash technology offering improved set reliability
- Slotted shadow mask optimized for minimum moiré
- Fine pitch over entire screen
- Phosphor lines follow glass contour
- Quick-heating cathodes
- Internal magnetic shield
- Reinforced envelope for push-through mounting
- Anti-crackle coating
- When combined with an appropriate hybrid saddle toroidal deflection unit (e.g. AT1206), it forms a self-converging and raster correction free assembly.

QUICK REFERENCE DATA

Deflection angle	90°
Face diagonal	37 cm
Overall length	342 mm
Neck diameter	29,1 mm
Heating	6,3 V, 685 mA
Anode voltage	25 kV
Focusing voltage	28% of anode voltage

ELECTRON-OPTICAL DATA

Electron gun system		unitized triple-aperture electrodes
Focusing method		electrostatic
Focus lens		hi-bi-potential
Deflection method		magnetic
Deflection angles		
diagonal		approx. 90°
horizontal		approx. 78°
vertical		approx. 60°

ELECTRICAL DATA

Capacitances		
anode to external conductive coating including rimband	$C_{a(m+m')}$	> 800 pF
grid 1 to all other electrodes	C_{g1}	17 pF
cathode of each gun to all other electrodes	C_{kR}, C_{kG}, C_{kB}	5 pF
focusing electrode to all other electrodes	C_{g3}	6 pF
Heating		indirect by AC or DC
heater voltage	V_f	6,3 V
heater current	I_f	685 mA

OPTICAL DATA

Screen	metal-backed vertical phosphor stripes; phosphor lines follow glass contour
Screen finish	satinized
Useful screen dimensions	
diagonal	min. 335,4 mm
horizontal axis	min. 280,8 mm
vertical axis	min. 210,6 mm
area	min. 580 cm^2
Phosphors	
red	pigmented europium activated rare earth
green	sulphide type
blue	pigmented sulphide type
Centre-to-centre distance of vertical identical colour phosphor stripes, at screen centre	0,65 mm
Light transmission of face glass at centre	68%

MECHANICAL DATA (see Figs 1 to 9)

Overall length	342,1 ± 5 mm
Neck diameter	$29{,}1\ ^{+1{,}4}_{-0{,}7}$ mm *
Bulb dimensions	
diagonal	max. 368 mm
width	max. 317 mm
height	max. 248 mm
Base	10-pin base JEDEC B10-277
Anode contact	small cavity contact J1-21, IEC 67-III-2
Mounting position	anode contact on top
Net mass	approx. 6 kg

Handling

During shipment and handling the tube should not be subjected to accelerations greater than 350 m/s^2 in any direction.

* In the region of 70 mm from the neck end, the maximum diameter is 30 mm.

MECHANICAL DATA (continued)

Dimensions in mm

Notes are given after the drawings.

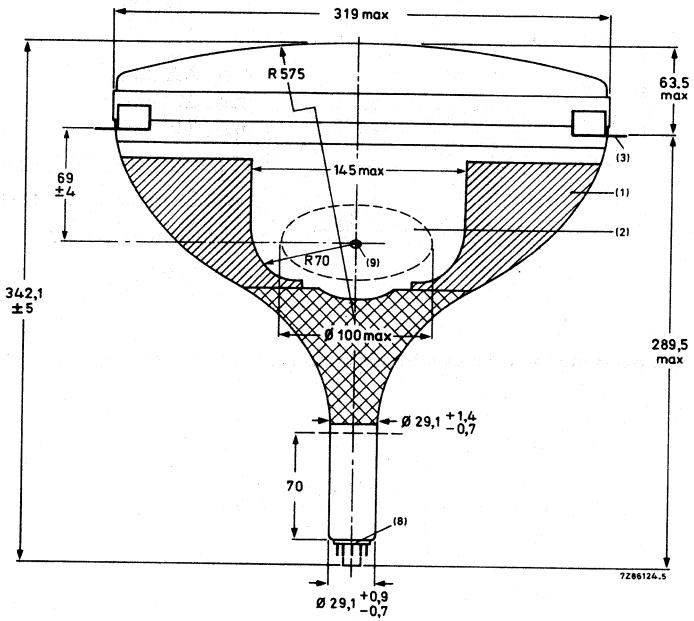

Fig. 1.

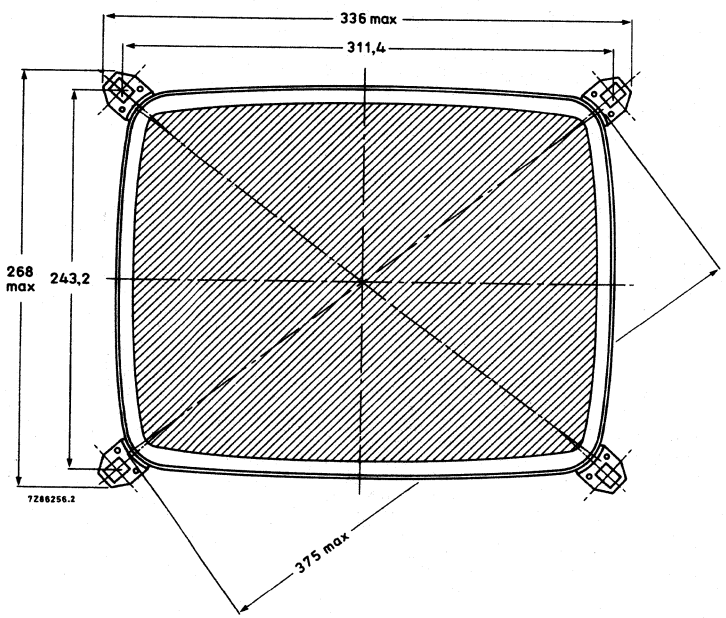

Fig. 2.

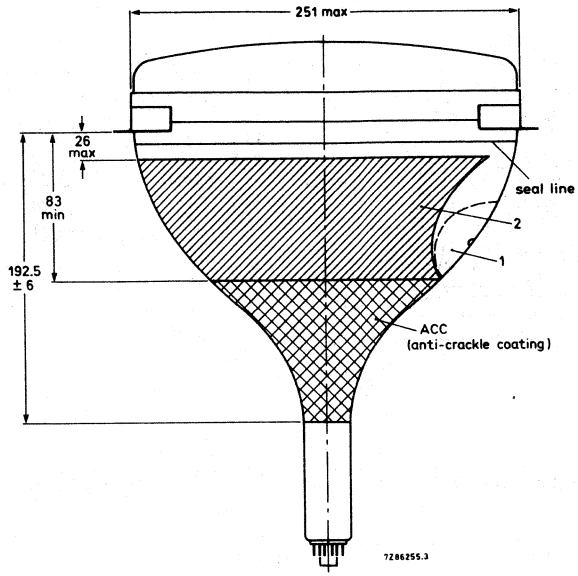
251 max
26
max
83
min
192.5
±6
seal line
2
1
ACC
(anti-crackle coating)
7Z86255.3

Fig. 3.

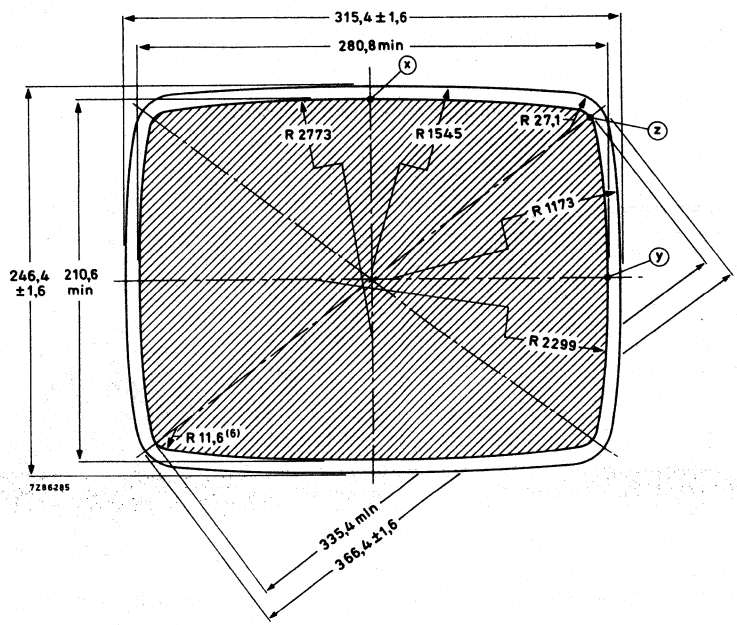
315,4 ± 1,6
280,8 min
x
R 2773
R 1545
R 27,1
z
R 1173
y
246,4
±1,6
210,6
min
R 2299
R 11,6 (6)
7Z86285
335,4 min
366,4 ± 1,6

Fig. 4.

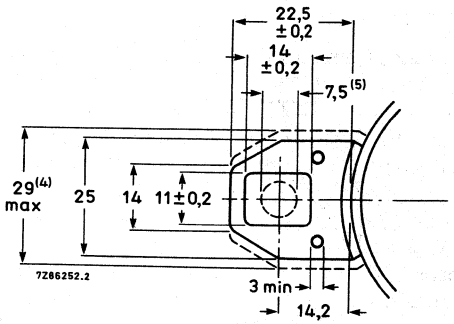

Fig. 5 Lug dimensions.

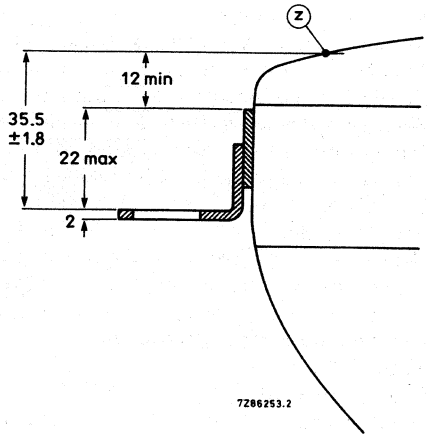

Fig. 6 Lug position.

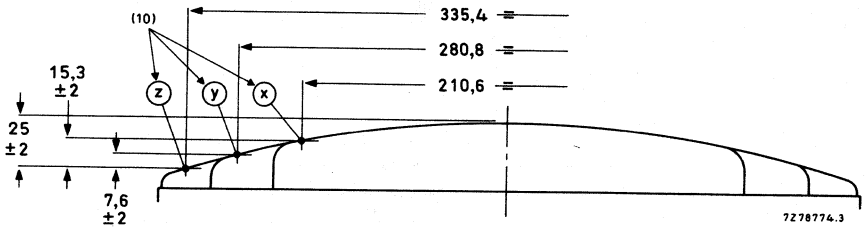

Fig. 7 Screen reference points.

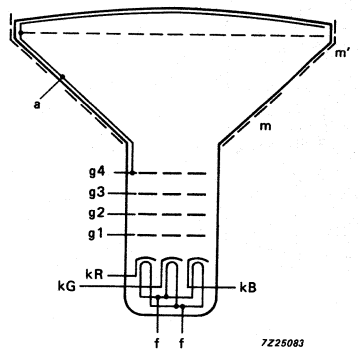

Fig. 8 Electrode configuration.

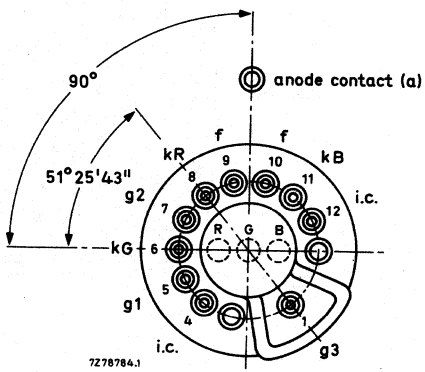

i.c. = internally connected (not to be used).
Fig. 9 Pin arrangement.

Notes to outline drawings

1. Configuration of outer conductive coating may be different, but will contain the contact area as shown in the drawing.
2. To clean this area, wipe only with a soft lintless cloth.
3. One of the four mounting lugs may deviate (1,5 mm max.) from the plane of the other three lugs. This deviation is incorporated in the tolerance of ± 1,8 mm.
4. Minimum space to be reserved for mounting lug.
5. The position of the mounting screw in the cabinet must be within a circle of 7,5 mm diameter drawn around the true geometrical positions, i.e. the corners of a rectangle of 311,4 mm x 243,2 mm.
6. Co-ordinates for radius R = 11,6 mm: x = 126,98 mm, y = 90,76 mm.
7. Not applicable.
8. The socket for this base should not be rigidly mounted; it should have flexible leads and be allowed to move freely. After mounting of the tube in the cabinet note that the position of the base can fall within a circle, having a diameter of max. 50 mm, concentric with an imaginary tube axis. The mass of the mating socket with circuitry should not be more than 150 g, maximum permissible torque is 40 mNm.
9. Small cavity contact J1-21, IEC67-III-2.
10. The X, Y and Z reference points are located on the outside surface of the face plate at the intersection of the minor, major and diagonal screen axis respectively, with the minimum published screen.

Maximum cone contour

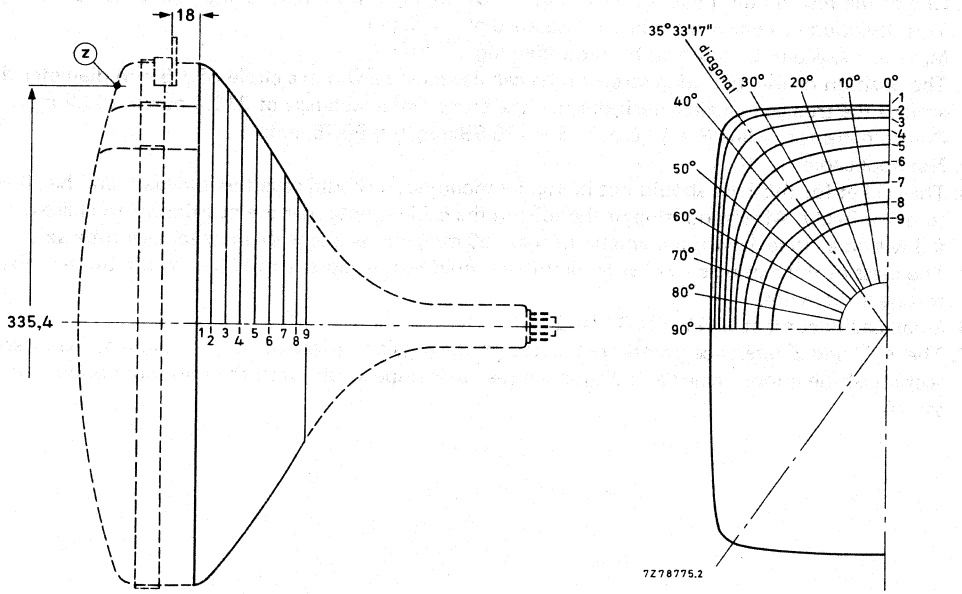

Fig. 10 Cone contour.

Table 1 Cone contour data

Dimensions in mm

section	nom. distance from section 1	distance from centre (max. values)														
		0°	10°	20°	25°	30°	32° 30′	diag. axes	37° 30′	40°	45°	50°	60°	70°	80°	90°
1	0	157,2	159,4	166,3	171,7	178,2	181,2	183,6	183,3	180,0	167,9	156,5	140,0	129,8	124,2	122,4
2	10	154,7	156,9	163,5	168,5	174,1	176,6	178,1	177,7	174,8	164,4	153,7	137,8	127,9	122,4	120,7
3	20	148,8	150,7	156,3	160,0	163,5	164,6	165,0	164,4	162,6	156,0	147,7	133,6	124,4	119,3	117,7
4	30	140,4	142,1	146,2	148,6	150,5	151,0	151,1	150,7	149,6	145,6	140,0	128,6	120,3	115,7	114,2
5	40	130,3	131,3	134,0	135,4	136,5	136,8	136,8	136,6	136,1	134,1	130,8	122,7	115,9	111,7	110,3
6	50	118,2	118,8	120,1	120,9	121,6	121,8	122,0	122,0	121,9	121,2	119,8	115,4	110,5	107,0	105,8
7	60	104,9	104,7	105,1	105,5	106,0	106,2	106,5	106,7	106,9	107,1	107,0	105,6	103,1	100,8	99,8
8	70	90,6	89,9	89,8	90,0	90,4	90,6	90,9	91,1	91,4	91,9	92,3	92,5	91,7	90,4	89,7
9	77	79,9	79,1	79,0	79,1	79,4	79,6	79,9	80,1	80,4	80,9	81,4	81,8	81,4	80,5	79,9

10-pin base; JEDEC B10-277

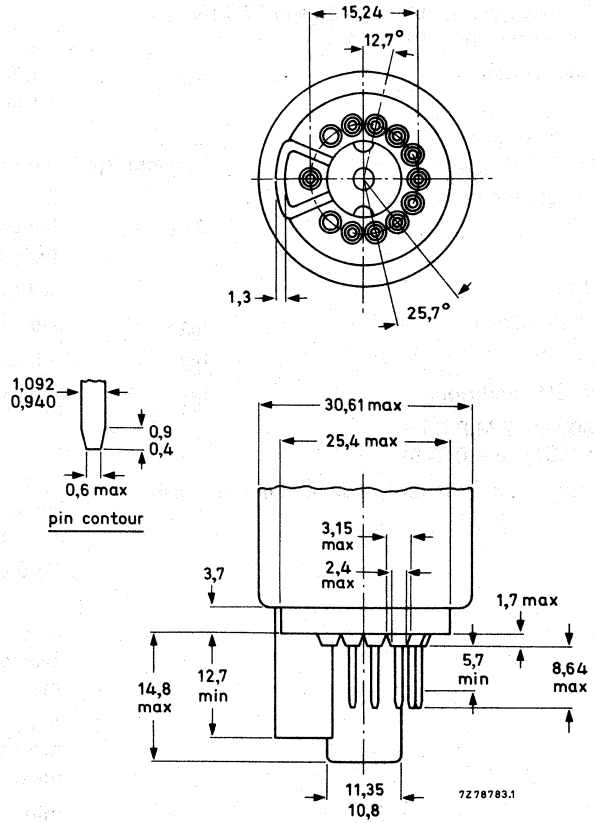

Fig. 11 JEDEC base.

TYPICAL OPERATING CONDITIONS

The voltages are specified with respect to grid 1.

Anode voltage	$V_{a,g4}$	25 kV
Grid 3 (focusing electrode) voltage	V_{g3}	6,6 to 7,5 kV
Grid 2 voltage for a spot cut-off voltage V_k = 140 V	V_{g2}	390 to 760 V
Luminance at the centre of the screen*	L	130 cd/m² ←

* Tube settings adjusted to produce white of 6500K + 7 M.P.C.D. (x = 0,313, y = 0,329) focused raster, current density 0,4 μA/cm².

EQUIPMENT DESIGN VALUES

The values are valid for anode voltages between 20 and 27,5 kV.
The voltages are specified with respect to grid 1.

Grid 3 (focusing electrode) voltage	V_{g3}	26,6 to 29,8% of anode voltage
Grid 2 voltage and cathode voltage for visual extinction of focused spot	V_{g2} and V_k	see Fig. 13*
Difference in cut-off voltages between guns in any tube	ΔV_k	lowest value > 80% of highest value
Video drive characteristics		see Fig. 14 **
Grid 3 (focusing electrode) current	I_{g3}	−5 to + 5 μA
Grid 2 current	I_{g2}	−5 to + 5 μA
Grid 1 current under cut-off conditions	I_{g1}	−5 to + 5 μA

To produce white of 6500K + 7 M.P.C.D.
(CIE co-ordinates x = 0,313, y = 0,329)

Percentage of the total anode current supplied by each gun (typical)

red gun	38,3%
green gun	35,8%
blue gun	25,9%

Ratio of anode currents

red gun to green gun	min.	0,8
	average	1,1
	max.	1,4
red gun to blue gun	min.	1,1
	average	1,5
	max.	1,9
blue gun to green gun	min.	0,5
	average	0,7
	max.	0,9

* The common V_{g2} should be adjusted as follows:
Set the cathode voltage, V_k, for each gun at 150 V. Increase the V_{g2} from about 400 V to the value at which the raster of one of the guns becomes just visible. Now decrease the V_k of the remaining guns so that the rasters of these guns also become visible.

** For optimum picture performance it is recommended that the cathodes are not driven below + 10 V.

LIMITING VALUES (Design maximum rating system unless otherwise stated)

The voltages are specified with respect to grid 1.

Anode voltage	$V_{a,g4}$	max. min.	27,5 kV 20 kV		notes 1, 2, 3 notes 1 and 4
Long-term average current for three guns	I_a	max.	750 μA		note 5
Grid 3 (focusing electrode) voltage	V_{g3}	max.	11 kV		
Grid 2 voltage, peak	V_{g2p}	max.	1000 V		
Cathode voltage					
positive	V_k	max.	400 V		
positive operating cut-off	V_k	max.	200 V		
negative	$-V_k$	max.	0 V		
negative peak	$-V_{kp}$	max.	2 V		
Heater voltage	V_f	6,3 V	+ 5 % −10 %		notes 1 and 6
Heater-cathode voltage					
heater negative with respect to cathode					
during equipment warm-up period not exceeding 15 s	V_{kf}	max.	450 V		note 1
after equipment warm-up period	V_{kf}	max.	250 V		
heater positive with respect to cathode	$-V_{kfp}$	peak	200 V		note 1
	$-V_{kf}$	max. (DC component value)	0 V		

Notes to the limiting values

1. Absolute maximum rating system.
2. The picture tube does not emit X-radiation above 1 μSv/h when operated within its absolute maximum ratings.
3. During adjustment on the production line this value is likely to be surpassed considerably. It is therefore strongly recommended to first make the necessary adjustments for normal operation without picture tube.
4. Operation of the tube at lower voltages impairs the luminance and resolution.
5. The short-term average anode current should be limited by circuitry to 1000 μA.
6. For maximum cathode life and optimum performance, it is recommended that the heater supply be designed for 6,3 V at zero beam current.

FLASHOVER PROTECTION

With the high voltage used with this tube (max. 27,5 kV) internal flashovers may occur. As a result of the Soft-Flash technology these flashover currents are limited to approx. 60 A offering higher set reliability, optimum circuit protection and component savings.
Primary protective circuitry using properly grounded spark gaps and series isolation resistors (preferably carbon composition) is still necessary to prevent tube damage. The spark gaps should be connected to all picture tube electrodes at the socket according to the figure below; they are not required on the heater pins. No other connections between the outer conductive coating and the chassis are permissible.
The spark gaps should be designed for a breakdown voltage at the focusing electrode (g3) of 11 kV ($1{,}5 \times V_{g3}$ max. at $V_{a,g4}$ = 25 kV), and at the other electrodes of 1,5 to 2 kV.
The values of the series isolation resistors should be as high as possible (min. 1,5 kΩ) without causing deterioration of the circuit performance. The resistors should be able to withstand an instantaneous surge of 20 kV for the focusing circuit and 12 kV for the remaining circuits without arcing.
Additional information is available on request.

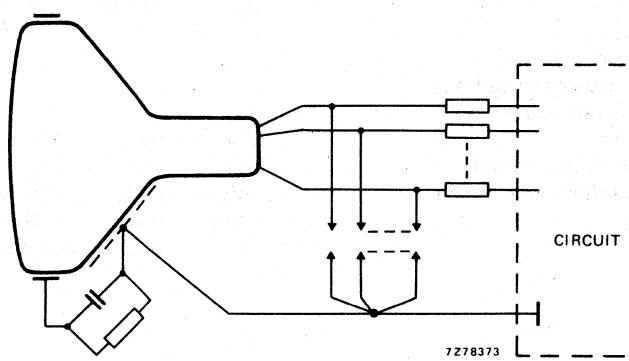

Fig. 12 Flashover protection circuit.

BEAM CORRECTIONS

Maximum required correction for register, as measured at the centre of the screen in any direction	0,08 mm
Centre convergence displacement of the blue and red beams is contained within a circle; max. diameter of circle	4 mm
Centre convergence displacement between the green beam and converged blue and red beams is contained within a circle; maximum diameter of circle	2 mm
Maximum centring error in any direction after colour purity, static convergence, and horizontal centre line correction, measured with deflection coils in nominal position	5 mm

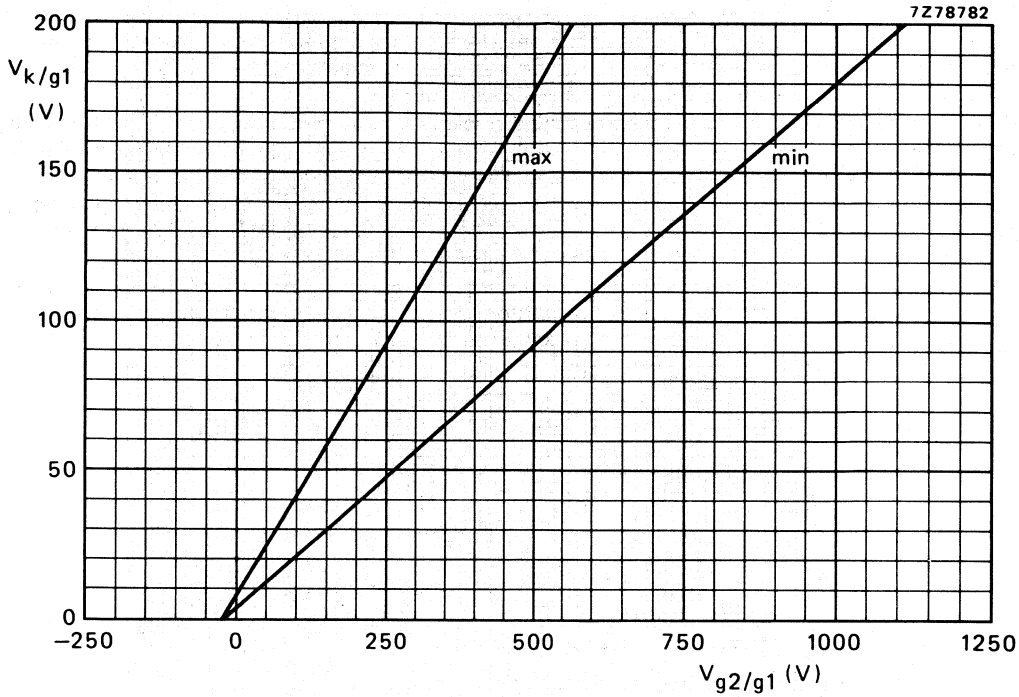

Fig. 13 Spot cut-off design chart (cathode drive), V_{g3} adjusted for focus, $V_{a,g4}$ = 20 to 27,5 kV.

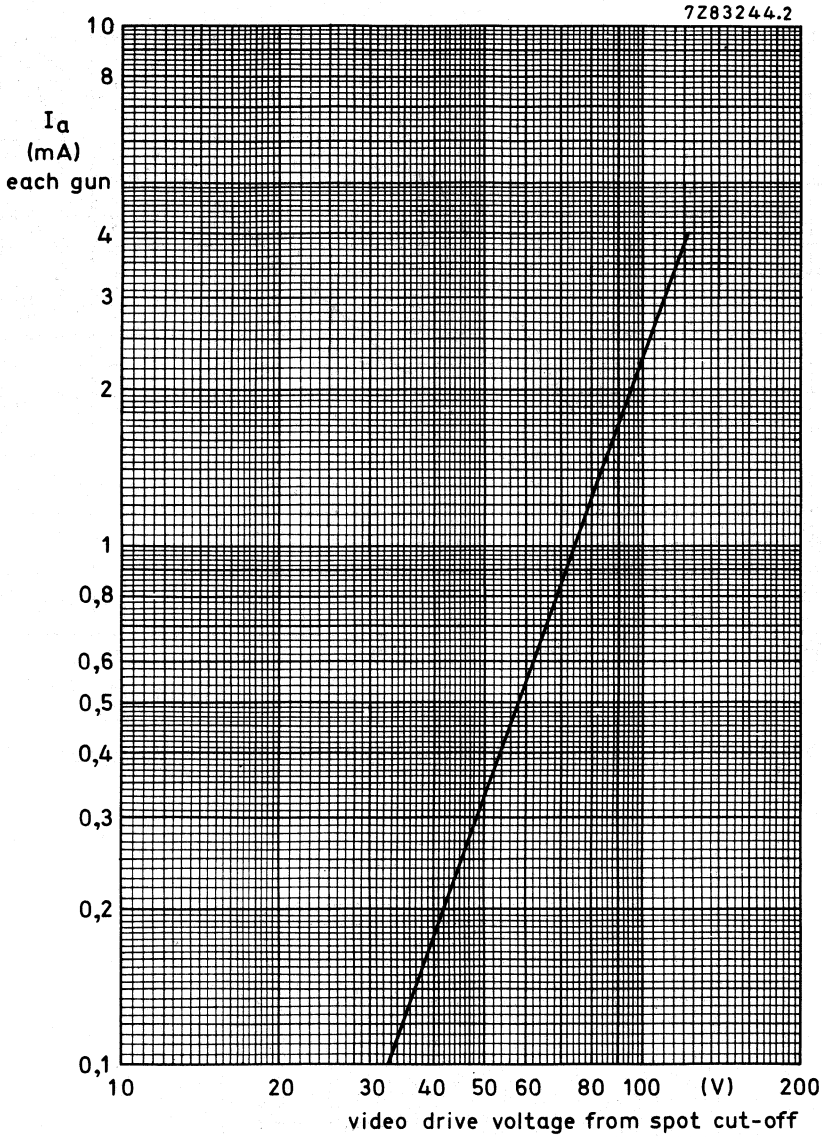

Fig. 14 Typical cathode drive characteristics.

V_f = 6,3 V;
$V_{a,g4}$ = 25 kV;
V_{g3} adjusted for focus;
V_{g2} adjusted to provide spot cut-off for V_K = 140 V.

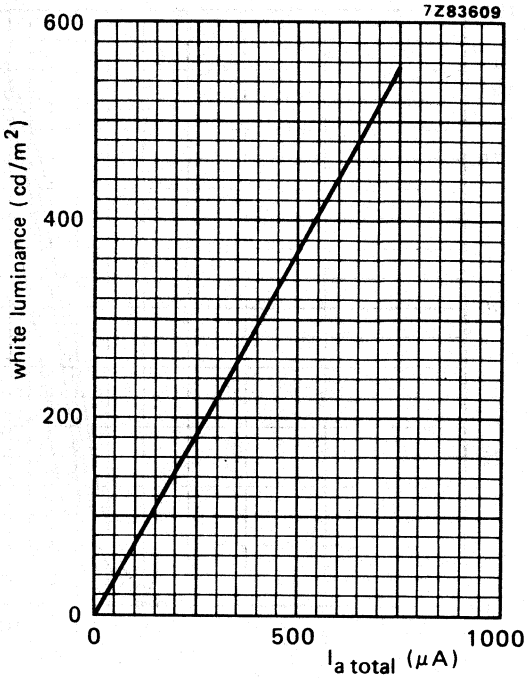

Fig. 15 Luminance at the centre of the screen as a function of I_{total}.
$V_{a,g4}$ = 25 kV, V_f = 6,3 V, V_{g3} adjusted for optimum focus.
Scanned area = 280,8 mm x 210,6 mm;
CIE co-ordinates x = 0,313, y = 0,329.

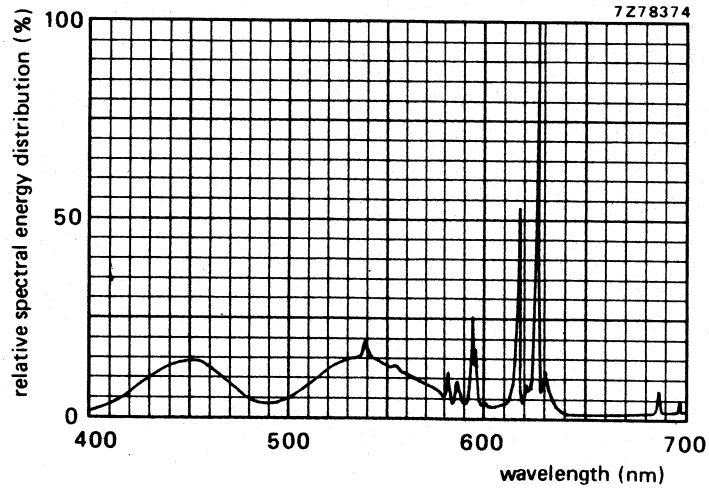

Fig. 16 Simultaneous excitation of red, green and blue phosphor, measured in a tube, to produce white of x = 0,313, y = 0,329. Exact shape of the peaks depends on the resolution of the measuring apparatus.

Colour co-ordinates:	x	y
red	0,635	0,340
green	0,315	0,600
blue	0,150	0,060

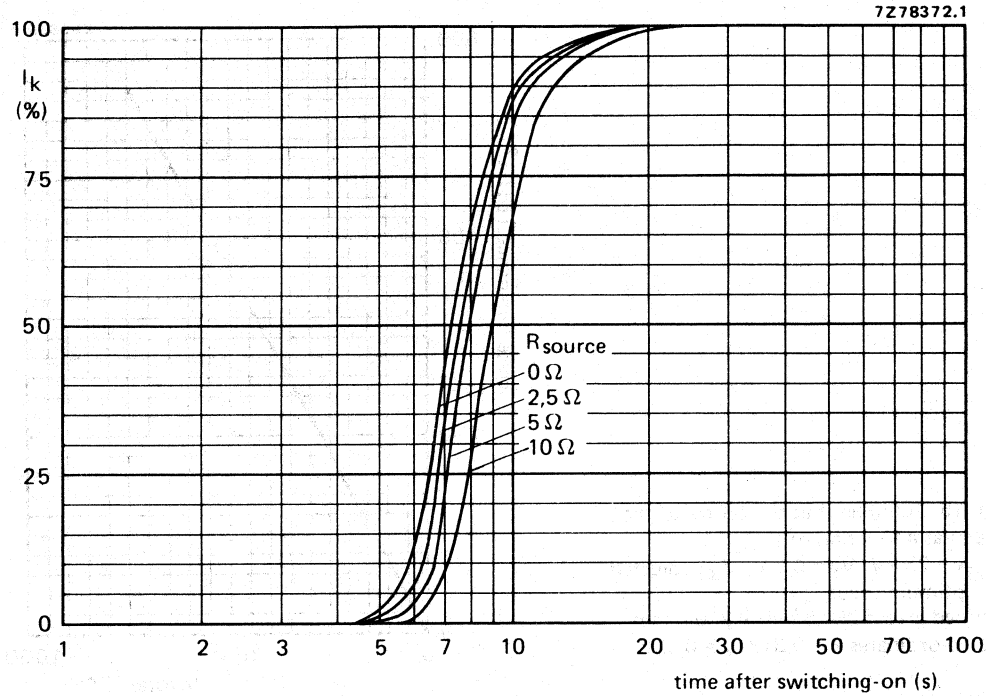

Fig. 17 Cathode heating time after switching on, measured under typical operating conditions.

DEGAUSSING

The picture tube is provided with an internal magnetic shield. This shield and the shadow mask with its suspension system may be provided with an automatic degaussing system, consisting of one magnetic coil winding mounted on the cone of the picture tube.

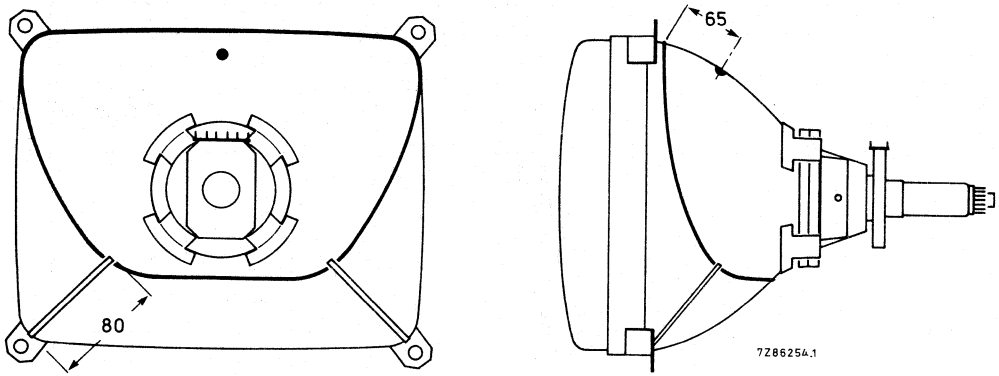

Fig. 18 Position of degaussing coil on the picture tube.

For proper degaussing an initial magnetomotive force (MMF) of 600 ampere-turns is required in the coil. This MMF has to be gradually decreased by appropriate degaussing circuitry. In the steady state, no significant MMF should remain in the coil ($\leqslant$ 0,6 ampere-turns). If single-phase power rectification is employed in the TV circuitry, provision should be included to prevent asymmetric distortion of the AC voltage applied to the degaussing circuit due to high DC inrush current. An example of a degaussing circuit and coil data for various mains voltages are given below.

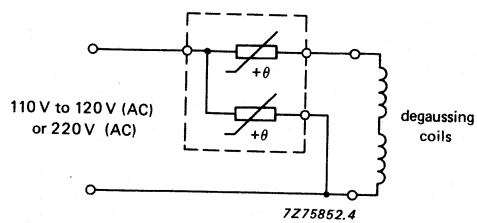

Fig. 19 Degaussing circuit using dual PTC thermistor.

Data of degaussing coil

	110 V (AC) mains	220 V (AC) mains
Circumference	90 cm	90 cm
Number of turns	70	120
Copper-wire diameter	0,45 mm	0,3 mm
Resistance	6,7 Ω	25,9 Ω
Catalogue number of appropriate dual PTC thermistor	8222 298 73091	2322 662 98009

COLOUR PICTURE TUBE ASSEMBLY

- Factory preset tube/coil assembly
- Self-converging and raster correction free
- 37 cm, 90° colour picture tube A37-590X
- Hybrid saddle toroidal deflection unit AT1206/20

QUICK REFERENCE DATA

Deflection angle	90°
Minimum useful screen diagonal	37 cm
Overall length	342 mm
Neck diameter	29.1 mm

MECHANICAL DATA

Dimensions in mm

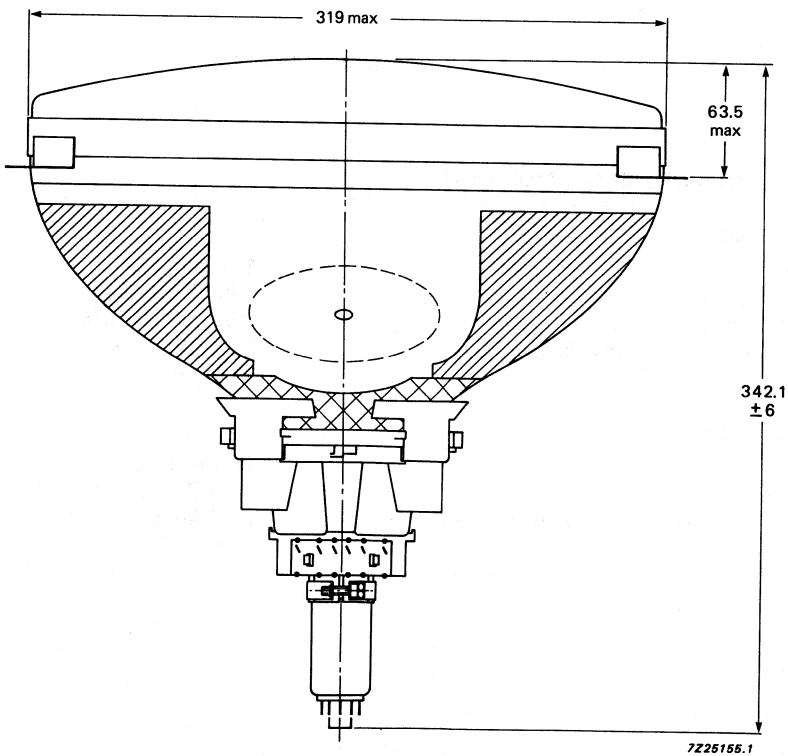

Fig. 1 Colour picture tube assembly A37-590X0620.

MECHANICAL DATA

Dimensions in mm

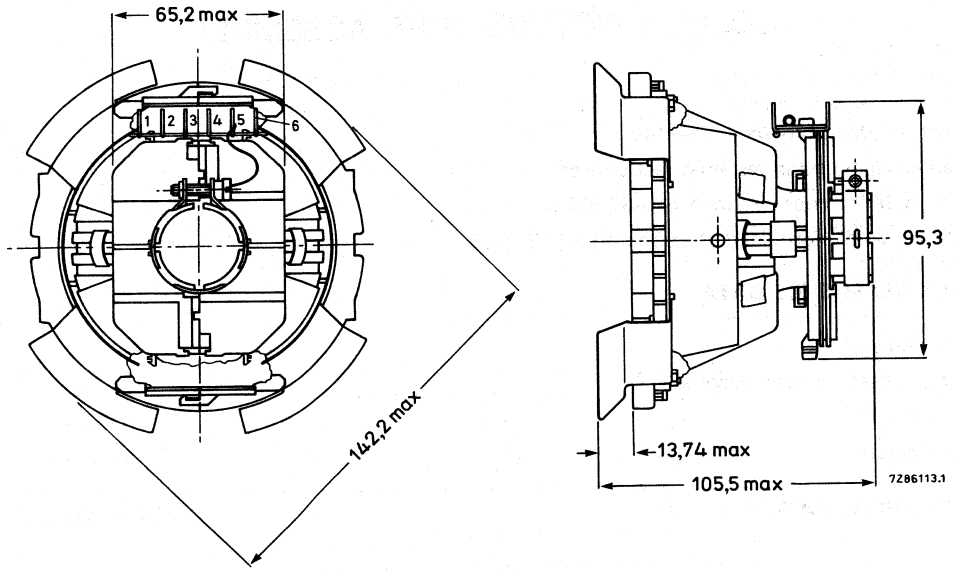

Fig. 2 Deflection unit AT1206/20.

ELECTRICAL DATA OF DEFLECTION UNIT

Line deflection coils	
Inductance	1.78 mH ± 5%
Resistance at 25 °C	1.80 Ω ± 10%
Magnetic flux at 25 kV	5.59 mWb ± 2.5%
Line deflection current, raster scan, at 25 kV	3.21 A(p-p)
Raster scan	281 mm
Field deflection coils	
Inductance	29.1 mH ± 10%
Resistance at 25 °C	11.0 Ω ± 7%
Field deflection current, raster scan, at 25 kV	0.97 A(p-p)
Raster scan	211 mm

Cross-talk	a voltage of 10 V, 15625 Hz applied to the line coils causes no more than 0.20 V across the field coils (damping resistors included)
Insulation resistance at 1 kV DC	
between line and field coils	> 500 MΩ
between line coil and core clamp	> 500 MΩ
between field coil and core clamp	> 10 MΩ
Maximum operating temperature (average copper temperature)	+90 °C
Storage temperature range	−25 to +90 °C
Flame retardent	according to UL 413, category 94V-1

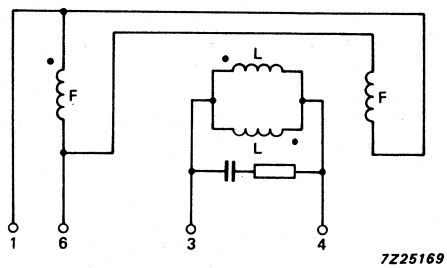

Fig. 3 Connection diagram. L = line coils; F = field coils.

The beginning of the windings is indicated with ●.

ENVIRONMENTAL TEST SPECIFICATIONS OF DEFLECTION UNITS

Vibration	IEC 68-2-6 (test Fc)
Shock	IEC 68-2-27 (test Ea)
Bump	IEC 68-2-29 (test Eb; 25g)
Cold	IEC 68-2-1 (test Ab)
Dry heat	IEC 68-2-2 (test Bb)
Damp heat, steady state	IEC 68-2-3 (test Ca)
Cyclic damp heat	IEC 68-2-30 (test Db)
Change of temperature	IEC 68-2-14 (test Nb)

Hi-Bri COLOUR PICTURE TUBE

- 90° deflection
- In-line, thermally stable hi-bi potential gun
- 22,5 mm neck diameter
- Hi-Bri technology
- Pigmented phosphors
- Slotted shadow mask optimized for minimum moiré
- Fine pitch over entire screen
- Phosphor lines follow glass contour
- Quick heating low-power cathodes
- Soft-Flash technology
- Internal magnetic shield
- Reinforced envelope for push-through mounting
- Combined with a deflection unit of the AT1635 series, it forms a self-converging and raster correction free assembly

QUICK REFERENCE DATA

Deflection angle	90°
Minimum useful screen diagonal	38 cm
Overall length	366 mm
Neck diameter	22,5 mm
Heating	6,3 V, 310 mA
Anode voltage	23 kV
Focusing voltage	28% of anode voltage

ELECTRON-OPTICAL DATA

Electron gun system		unitized triple-aperture electrodes
Focusing method		electrostatic
Focus lens		hi-bi-potential
Deflection method		magnetic
Delfection angles		
diagonal		approx. 90°
horizontal		approx. 78°
vertical		approx. 60°

ELECTRICAL DATA

Capacitances		
anode to external conductive coating including rimband	$C_{a(m+m')}$	min. 1000 pF
grid 1 to all other electrodes	C_{g1}	15 pF
cathode of each gun to all other electrodes	C_{kR}, C_{kG}, C_{kB}	4 pF
focusing electrode to all other electrodes	C_{g3}	4 pF
Heating		indirect by AC or DC
heater voltage	V_f	6,3 V
→ heater current	I_f	310 mA

OPTICAL DATA

Screen	metal-backed vertical phosphor stripes; phosphor lines follow glass contour
Screen finish	satinized
Useful screen dimensions	
diagonal	min. 382,3 mm
horizontal axis	min. 322,1 mm
vertical axis	min. 241,6 mm
area	min. 755 cm^2
Phosphors	
red	pigmented europium activated rare earth
green	sulphide type
blue	pigmented sulphide type
Centre-to-centre distance of vertical identical colour phosphor stripes, at screen centre	0,70 mm
Light transmission of face glass at centre	66,8%

MECHANICAL DATA (see also the figures on the following pages)

Overall length	365,9 ± 5 mm
Neck diameter	$22{,}5\ ^{+\ 1{,}4}_{-0{,}7}$ mm*
Bulb dimensions	
diagonal	max. 418,8 mm
width	max. 360,6 mm
height	max. 281,8 mm
Base	JEDEC B8-288
Anode contact	small cavity contact J1-21, IEC 67-III-2
Mounting position	anode contact on top
Net mass	approx. 8 kg

Handling

During shipment and handling the tube should not be subjected to accelerations greater than 35g in any direction.

* In the region of 66 mm from the neck end, the maximum diameter is 23,2 mm.

MECHANICAL DATA (continued)

Notes are given after the drawings

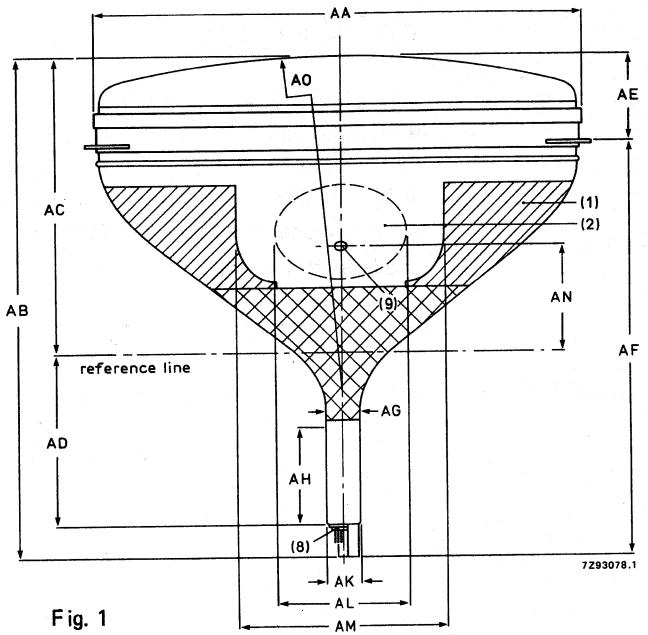

Fig. 1

Dimensions in mm

AA	365 max
AB	370,9 max
AC	232,0 ± 4
AD	118 ± 1
AE	69,0 max
AF	304,0 max
AG	$22,5^{+1,4}_{-0,7}$
AH	66
AK	22,5 ± 0,7
AL	90 ± 10
AM	140 ± 3
AN	85,0 ± 3,2
AO	R653

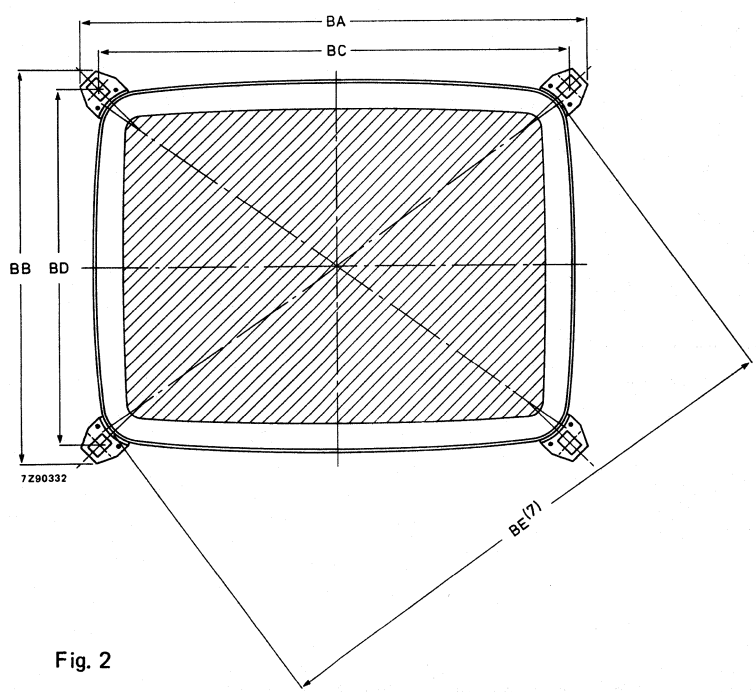

Fig. 2

Dimensions in mm

BA	384 max
BB	305 max
BC	355,8
BD	276,7
BE	423 max

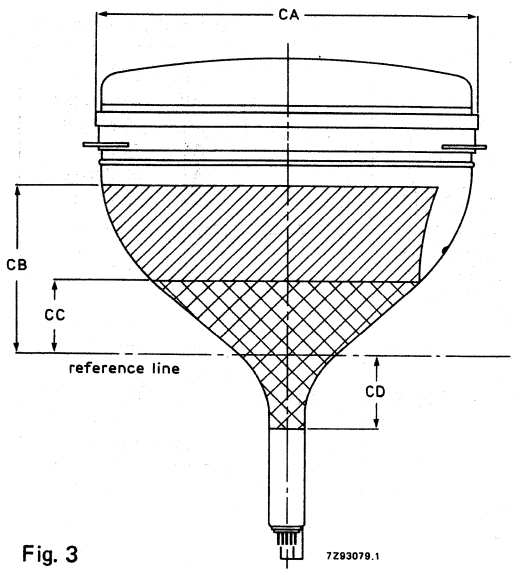

Fig. 3

Dimensions in mm

CA	286 max
CB	143 min
CC	54 max
CD	53 max

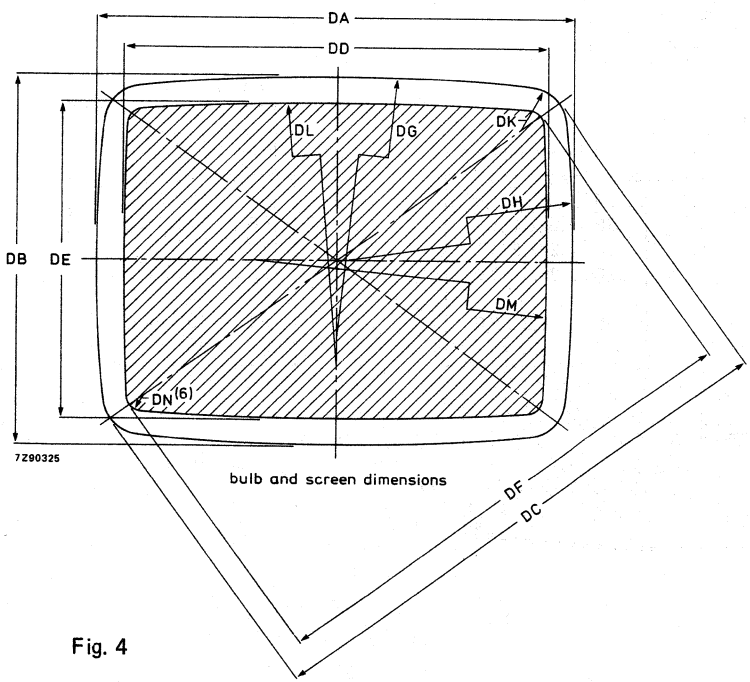

Fig. 4

Dimensions in mm

DA	359,0 ± 1,6
DB	280,2 ± 1,6
DC	417,2 ± 1,6
DD	322,1 min
DE	241,6 min
DF	382,3 min
DG	R1592
DH	R1255
DK	R28,5
DL	R2148
DM	R1588
DN	R11,1

MECHANICAL DATA (continued)

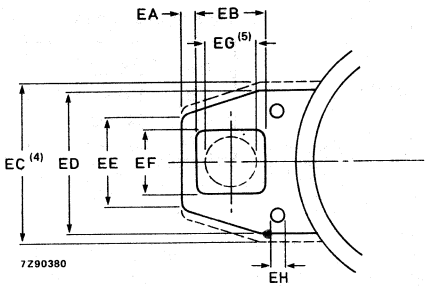

Fig. 5 Lug dimensions.

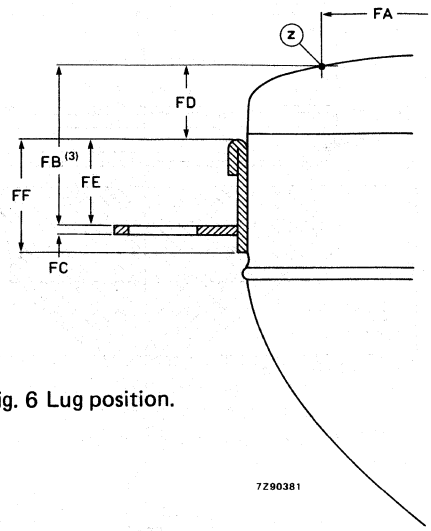

Fig. 6 Lug position.

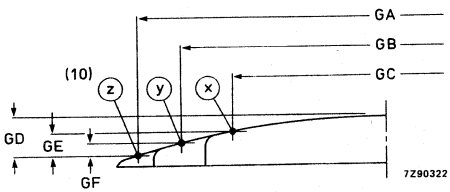

Fig. 7 Screen reference points.

Dimensions in mm

EA	3 min
EB	14,5 ± 0,2
EC	33 max
ED	30 ± 1
EE	20
EF	14,5 ± 0,2
EG	11,5
EH	3,0 min

Dimensions in mm

GA	382,3
GB	322,1
GC	241,6
GD	28,6 ± 2,0
GE	17,3 ± 2,0
GF	8,4 ± 2,0

Dimensions in mm

FA	382,3
FB	37,5 ± 1,8
FC	3
FD	16 min
FE	19,5 max
FF	25 max

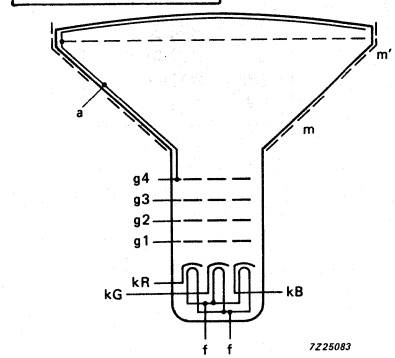

Fig. 8 Electrode configuration.

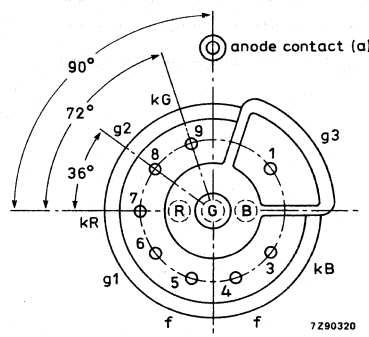

Fig. 9 Pin arrangement.

Notes to outline drawings

1. Configuration of outer conductive coating may be different, but will contain the contact areas as shown in the drawing.
2. To clean this area, wipe only with a soft lintless cloth.
3. One of the four mounting lugs may deviate (1,5 mm max.) from the plane of the other three lugs. This deviation is incorporated in the tolerance of ± 1,8 mm.
4. Minimum space to be reserved for mounting lug.
5. The position of the mounting screw in the cabinet must be within a circle of 11,5 mm diamter drawn around the true geometrical positions, i.e. the corners of a rectangle of 355,8 mm x 276,7 mm.
6. Co-ordinates for radius R = 11,1 mm; x = 146,52 mm, y = 104,72 mm.
7. Maximum dimensions in plane of lugs.
8. The socket for this base should not be rigidly mounted; it should have flexible leads and be allowed to move freely. After mounting of the tube in the cabinet note that the position of the base can fall within a circle, having a diameter of max. 50 mm, concentric with an imaginary tube axis.
9. Small cavity contact J1-21, IEC 67-III-2.
10. The X, Y and Z reference points are located on the outside surface of the face plate at the intersection of the minor, major and diagonal screen axis respectively, with the minimum published screen.

Reference line gauge; G-R90CJ10

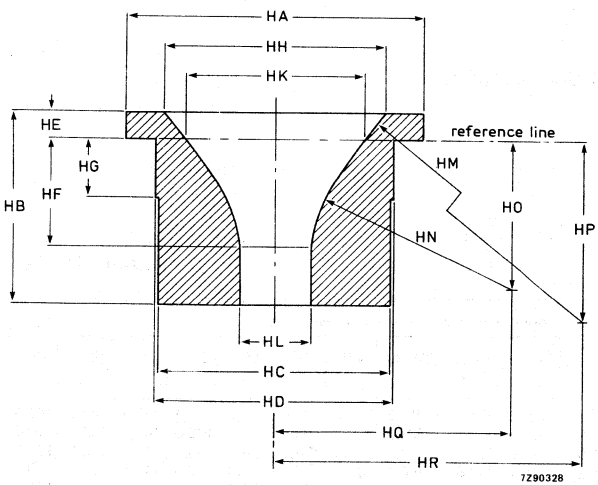

Fig. 10 Reference line guage.

Dimensions in mm

HA	ϕ100,00
HB	65,00
HC	ϕ78,70
HD	ϕ80,00
HE	9,20 ± 0,02
HF	36,22 ± 0,02
HG	20,00
HH	ϕ75,48 ± 0,02
HK	ϕ60,77 ± 0,02
HL	$\phi 23{,}90^{+0{,}04}_{-0}$
HM	R220,00
HN	R70,00
HO	50,30
HP	132,71
HQ	80,52
HR	205,85

Maximum cone contour

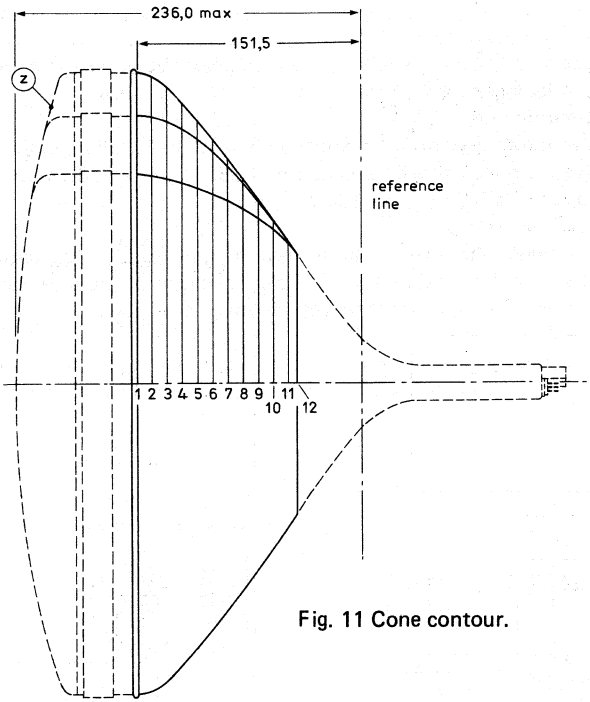

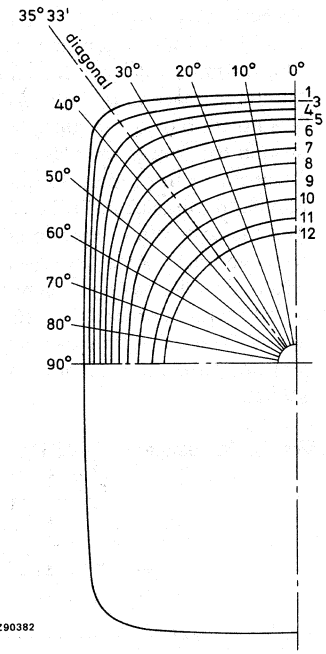

Fig. 11 Cone contour.

Table 1 Cone contour data

Dimensions in mm

section	nom. distance from reference line	distance from centre (max. values)														
		0°	10°	20°	25°	30°	32° 30'	diag. axes	37° 30'	40°	45°	50°	60°	70°	80°	90°
1	151,5	181,5	183,9	191,5	197,4	205,0	209,2	211,2	210,5	207,2	192,7	179,9	161,4	149,9	143,6	141,6
2	141,5	180,3	182,6	190,0	195,7	202,9	206,9	209,1	208,2	204,2	190,1	177,9	160,0	148,8	142,6	140,6
3	131,5	177,1	179,3	186,0	191,0	197,0	199,9	200,9	199,7	196,0	184,1	173,2	156,7	146,1	140,2	138,3
4	121,5	172,1	174,1	179,9	184,0	188,2	189,7	189,8	188,4	185,4	176,2	167,0	152,3	142,5	137,0	135,2
5	111,5	165,4	167,0	171,8	174,9	177,6	178,3	177,9	176,8	174,4	167,4	159,9	147,1	138,3	133,3	131,6
6	101,5	156,6	158,0	161,7	164,0	165,7	166,1	165,7	164,9	163,1	158,1	152,1	141,3	133,6	129,1	127,6
7	91,5	146,0	147,1	150,0	151,8	153,1	153,4	153,2	152,7	151,6	148,1	143,7	134,9	128,3	124,4	123,1
8	81,5	134,6	135,5	137,7	139,0	140,0	140,2	140,2	139,9	139,3	137,2	134,3	127,8	122,4	119,1	118,0
9	71,5	123,0	123,6	125,2	126,0	126,5	126,7	126,7	126,5	126,2	125,1	123,5	119,3	115,5	113,0	112,1
10	61,5	110,9	111,3	112,0	112,4	112,6	112,6	112,6	112,6	112,4	112,0	111,3	109,4	107,4	105,8	105,2
11	51,5	97,8	97,9	98,1	98,1	98,2	98,2	98,1	98,1	98,1	98,1	97,8	97,4	96,9	96,4	96,2
12	45,0	88,5	88,5	88,5	88,5	88,5	88,5	88,5	88,5	88,5	88,5	88,5	88,5	88,4	88,4	88,4

Base JEDEC B8-288

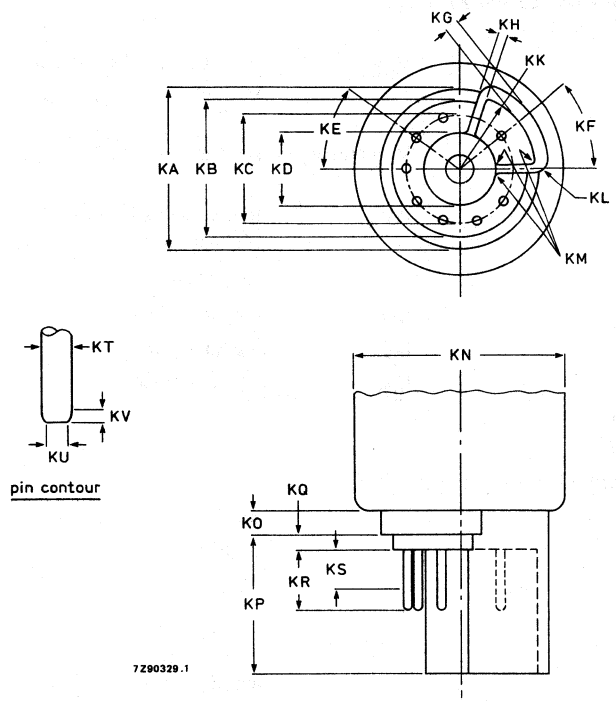

Dimensions in mm

KA	17,9 max
KB	15,4 max
KC	12,0
KD	7,9 min; 8,2 max
KE	36°
KF	38°
KG	1,3 max
KH	0,8 min; 1,0 max
KK	R8,66 ± 0,1
KL	R1,0
KM	R0,25
KN	23,2 max
KO	1,2 max ←
KP	13,6 ± 0,2 ←
KQ	1,6 max
KR	6,85 max
KS	4,5 min
KT	1,016 ± 0,076
KU	0,63 max
KV	0,4 min

Fig. 12 JEDEC base.

TYPICAL OPERATING CONDITIONS

The voltages are specified with respect to grid 1.

Anode voltage	$V_{a,g4}$	23	kV
Grid 3 (focusing electrode) voltage	V_{g3}	6,1 to 6,9	kV
Grid 2 voltage for a spot cut-off voltage V_k = 120 V	V_{g2}	310 to 600	V
Luminance at the centre of the screen*	L	130	cd/m² ←

* Tube settings adjusted to produce white of 6500K + 7 M.P.C.D. (x = 0,313, y = 0,329) focused raster, current density 0,4 μA/cm².

EQUIPMENT DESIGN VALUES

The values are valid for anode voltages between 20 and 27,5 kV.
The voltages are specified with respect to grid 1.

Grid 3 (focusing electrode) voltage	V_{g3}	26,6 to 29,8% of anode voltage
Grid 2 voltage and cathode voltage for visual extinction of focused spot	V_{g2} and V_k	see Fig. 14
Difference in cut-off voltages between guns in any tube	ΔV_k	lowest value > 80% of highest value
Video drive characteristics		see graphs
→ Grid 3 (focusing electrode) current	I_{g3}	−2 to + 2 μA
→ Grid 2 current	I_{g2}	−2 to + 2 μA
→ Grid 1 current under cut-off conditions	I_{g1}	−2 to + 2 μA

To produce white of 6500K + 7 M.P.C.D.
(CIE co-ordinates x = 0,313, y = 0,329)

Percentage of the total anode current supplied by each gun (typical)

red gun	38,3%
green gun	35,8%
blue gun	25,9%

Ratio of anode currents

red gun to green gun	min.	0,8
	average	1,1
	max.	1,4
red gun to blue gun	min.	1,1
	average	1,5
	max.	1,9
blue gun to green gun	min.	0,5
	average	0,7
	max.	0,9

LIMITING VALUES (Design maximum rating system unless otherwise stated)

The voltages are specified with respect to grid 1.

Anode voltage	$V_{a,g4}$	max.	27,5 kV		notes 1, 2, 3
		min.	20 kV		notes 1 and 4
Long-term average current for three guns	I_a	max.	750	μA	note 5
Grid 3 (focusing electrode) voltage	V_{g3}	max.	11	kV	
Grid 2 voltage, peak	V_{g2p}	max.	1000	V	
Cathode voltage					
positive	V_k	max.	400	V	
positive operating cut-off	V_k	max.	200	V	
negative	$-V_k$	max.	0	V	
negative peak	$-V_{kp}$	max.	2	V	
Heater voltage	V_f	6,3 V	+5	%	notes 1 and 6
			−10	%	
Heater-cathode voltage					
heater negative with respect to cathode					
after equipment warm-up period	V_{kf}	max.	200	V	
heater positive with respect to cathode	$-V_{kfp}$	peak	200	V	note 1
	$-V_{kf}$	max.	0	V	
		(d.c. component value)			

Notes

1. Absolute maximum rating system.
2. The picture tube does not emit X-radiation above 1 μSv/h when operated within its absolute maximum ratings. ←
3. During adjustment on the production line this value is likely to be surpassed considerably. It is therefore strongly recommended to first make the necessary adjustments for normal operation without picture tube.
4. Operation of the tube at lower voltages impairs the luminance and resolution.
5. The short-term average anode current should be limited by circuitry to 1000 μA.
6. For maximum cathode life and optimum performance, it is recommended that the heater supply be designed for 6,3 V at zero beam current.

FLASHOVER PROTECTION

With the high voltage used with this tube (max. 27,5 kV) internal flashovers may occur. As a result of the Soft-Flash technology these flashover currents are limited to approx. 60 A offering higher set reliability, optimum circuit protection and component savings.

Primary protective circuitry using properly grounded spark gaps and series isolation resistors (preferably carbon composition) is still necessary to prevent tube damage. The spark gaps should be connected to all picture tube electrodes at the socket according to the figure below; they are not required on the heater pins. No other connections between the outer conductive coating and the chassis are permissible. The spark gaps should be designed for a breakdown voltage at the focusing electrode (g3) of 12 kV ($1,5 \times V_{g3}$ max. at $V_{a,g4} = 25$ kV), and at the other electrodes of 1,5 to 2 kV.

The values of the series isolation resistors should be as high as possible (min. 1,5 kΩ) without causing deterioration of the circuit performance. The resistors should be able to withstand an instantaneous surge of 20 kV for the focusing circuit and 12 kV for the remaining circuits without arcing.

Additional information is available on request.

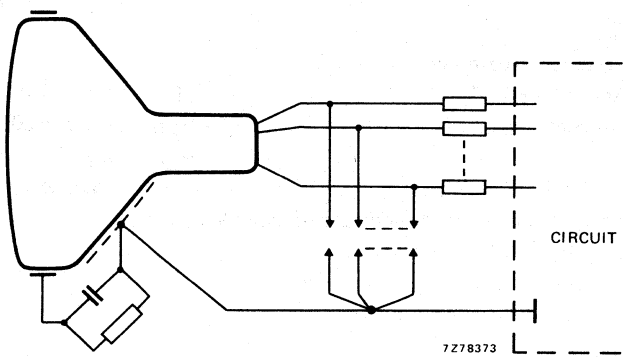

Fig. 13 Flashover protection circuit.

CENTRING ERROR

Maximum centring error in any direction after colour purity, static convergence, and horizontal centre line correction, measured with deflection coils in nominal position	4 mm

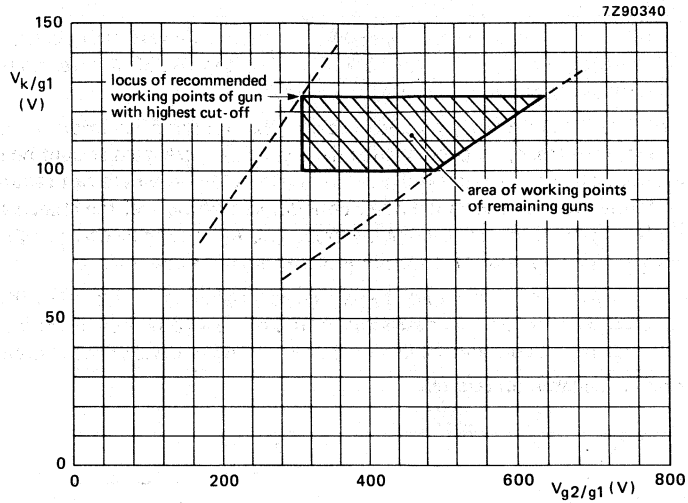

Fig. 14 Spot cut-off design chart.

Grid 2 voltage (V_{g2}) adjusted for highest gun spot cut-off voltage V_k = 125 V.

Remaining guns adjusted for spot cut-off by means of cathode voltage

V_{g2} range 310 to 630 V;

V_k range 100 to 125 V.

Adjustment procedure:

Set the cathode voltage (V_k) for each gun at 125 V; increase the grid 2 voltage (V_{g2}) from approx. 300 V to the value at which one of the colours becomes just visible. Now decrease the cathode voltage of the remaning guns so that the other colours also become visible.

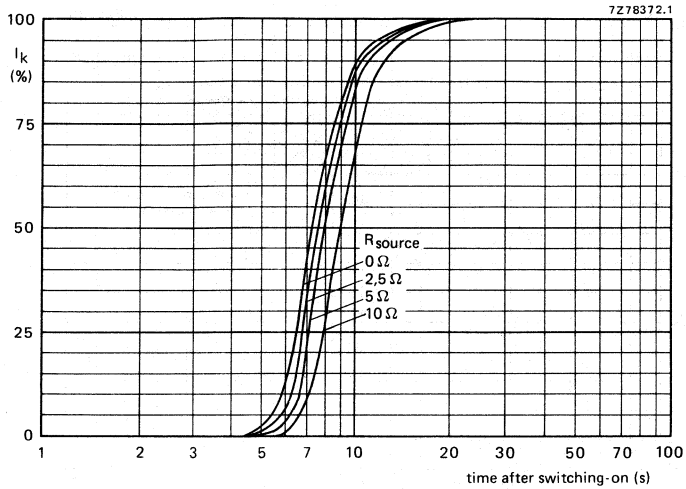

Fig. 15 Cathode heating time after switching on, measured under typical operating conditions.

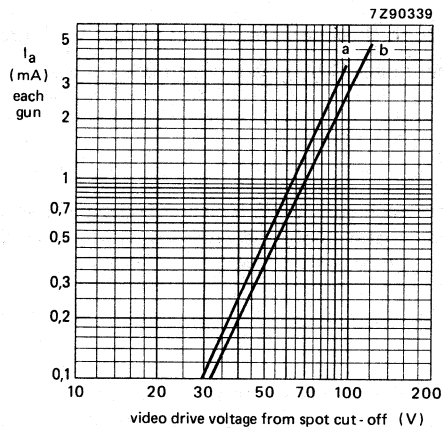

Fig. 16 Typical cathode drive characteristics.

V_f = 6,3 V;

$V_{a,g4}$ = 23 kV;

V_{g3} adjusted for focus;

V_{g2} (each gun) adjusted to provide spot cut-off for V_k = 100 V (curve a), and V_k = 125 V (curve b).

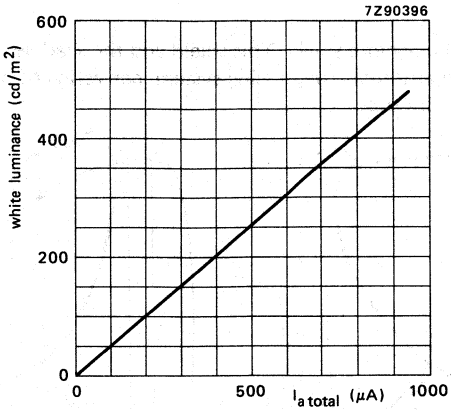

Fig. 17
Luminance at the centre of the screen as a function of I_{total}. $V_{a,g4}$ = 23 kV, V_f = 6,3 V, V_{g3} adjusted for optimum focus.
Scanned area = 322,1 mm x 241,6 mm; CIE co-ordinates x = 0,313, y = 0,329.

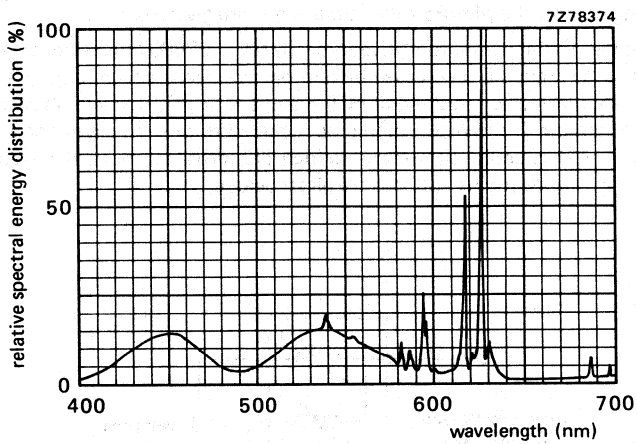

Fig. 18
Simultaneous excitation of red, green and blue phosphor, measured in a tube, to produce white of x = 0,313, y = 0,329. Exact shape of the peaks depends on the resolution of the measuring apparatus.

Colour co-ordinates:

	x	y
red	0,635	0,340
green	0,315	0,600
blue	0,150	0,060

DEGAUSSING

The picture tube has an internal magnetic shield. This shield and the shadow mask with its suspension system may be provided with an automatic degaussing system, consisting of one magnetic coil winding mounted on the cone of the picture tube.

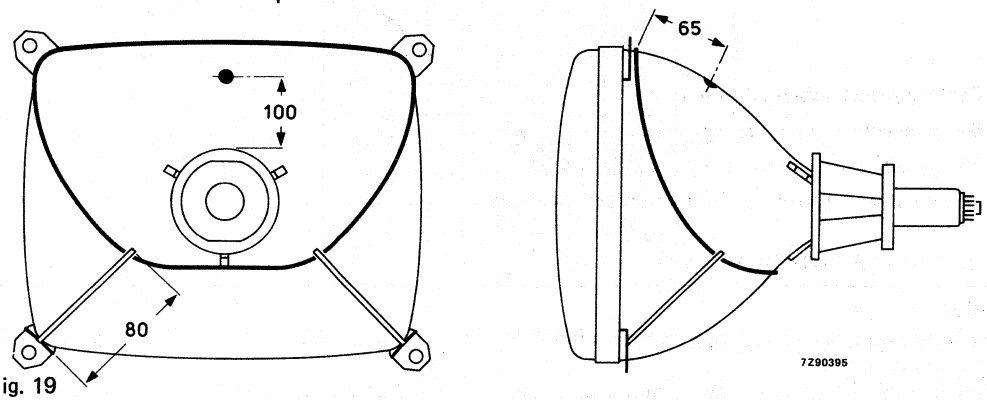

Fig. 19
Position of degaussing coil on the picture tube; dimensions are given in mm.

For proper degaussing an initial magnetomotive force (MMF) of 600 ampere-turns is required in the coil. This MMF has to be gradually decreased by appropriate degaussing circuitry. In the steady state, no significant MMF should remain in the coil ($\leqslant$ 0,6 ampere-turns). If single-phase power rectification is employed in the TV circuitry, provision should be included to prevent asymmetric distortion of the AC voltage applied to the degaussing circuit due to high DC inrush currents. An example of a degaussing circuit and coil data for various mains voltages are given below.

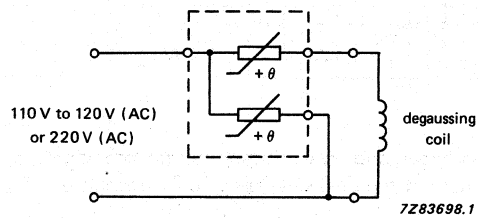

Fig. 20 Degaussing circuit using dual PTC thermistor.

Data of degaussing coil

	110 V (AC) mains	220 V (AC) mains
Circumference	105 cm	105 cm
Number of turns	60	120
Copper wire diameter	0,45 mm	0,35 mm
Resistance	7 Ω	23 Ω
Catalogue number of appropriate dual PTC thermistor	2322 662 98013	2322 662 98009

Hi-Bri COLOUR PICTURE TUBE ASSEMBLY

- Factory preset tube/coil assembly
- Self-converging and raster correction free
- 38 cm, 90° colour picture tube A38EAC00X
- Hybrid saddle toroidal deflection unit AT1635/00

QUICK REFERENCE DATA

Deflection angle	90°
Minimum useful screen diagonal	38 cm
Overall length	366 mm
Neck diameter	22.5 mm

MECHANICAL DATA

Dimensions in mm

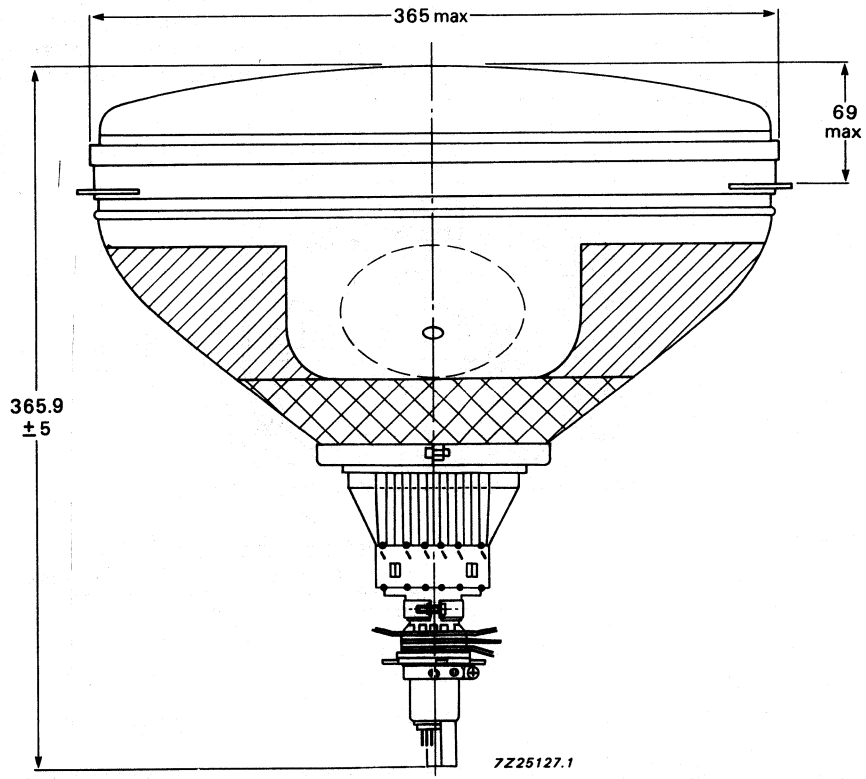

Fig. 1 Colour picture tube assembly A38EAC00X01.

MECHANICAL DATA

Dimensions in mm

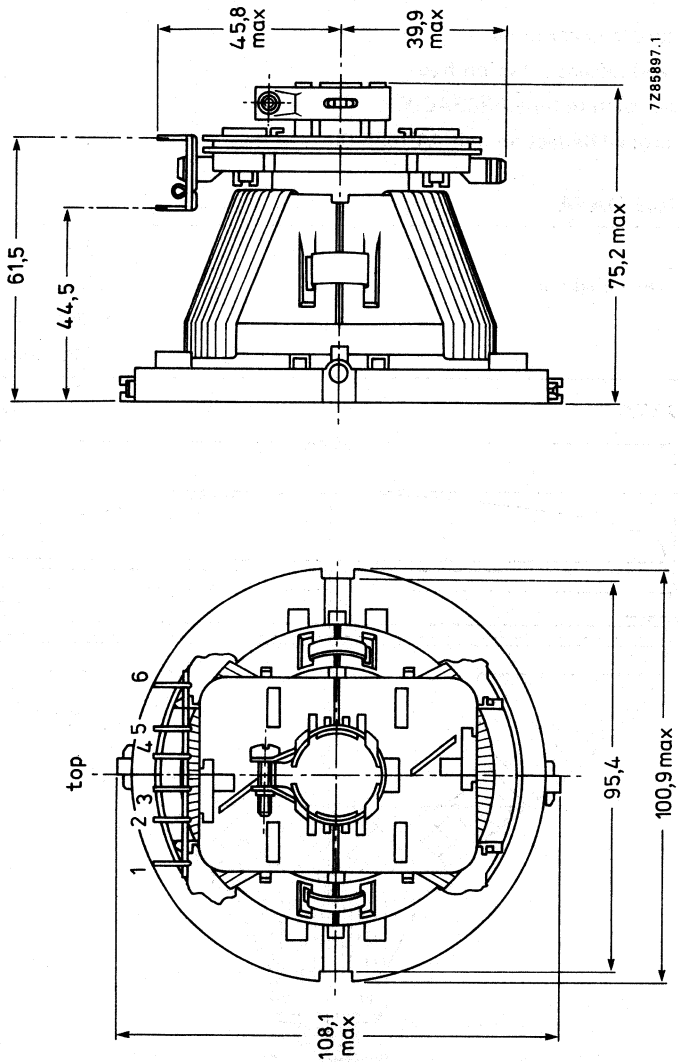

Fig. 2 Deflection unit AT1635/00.

ELECTRICAL DATA OF DEFLECTION UNIT

Line deflection coils	
Inductance	2.50 mH ± 4%
Resistance at 25 °C	3.3 Ω ± 10%
Magnetic flux at 23 kV	5.27 mWb ± 2.5%
Line deflection current, raster scan, at 23 kV	2.07 A(p-p)
Raster scan	322 mm
Field deflection coils	
Inductance	27.5 mH ± 10%
Resistance at 25 °C	11.8 Ω ± 7%
Field deflection current, raster scan, at 23 kV	0.78 A(p-p)
Raster scan	241 mm

Cross-talk	a voltage of 10 V, 15625 Hz applied to the line coils causes no more than 0.20 V across the field coils (damping resistors included)
Insulation resistance at 1 kV DC	
between line and field coils	> 500 MΩ
between line coil and core clamp	> 500 MΩ
between field coil and core clamp	> 10 MΩ
Maximum operating temperature (average copper temperature)	+ 90 °C
Storage temperature range	−25 to + 90 °C
Flame retardent	according to UL 1413, category 94-V1

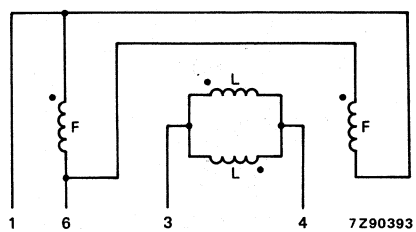

Fig. 3 Connection diagram. L = line coils, F = field coils.
The beginning of the windings is indicated with ●

ENVIRONMENTAL TEST SPECIFICATIONS OF DEFLECTION UNITS

Vibration	IEC 68-2-6 (test Fc)
Shock	IEC 68-2-27 (test Ea)
Bump	IEC 68-2-29 (test Eb; 25g)
Cold	IEC 68-2-1 (test Ab)
Dry heat	IEC 68-2-2 (test Bb)
Damp heat, steady state	IEC 68-2-3 (test Ca)
Cyclic damp heat	IEC 68-2-30 (test Db)
Change of temperature	IEC 68-2-14 (test Nb)

FLAT SQUARE Hi-Bri COLOUR PICTURE TUBE

- Flat and square screen
- 90° deflection
- In-line, hi-bi potential A R T* gun
- 22,5 mm neck diameter
- Shadow mask of NiFe alloy with low thermal expansion
- Hi-Bri technology
- Mask with corner suspension
- Pigmented phosphors
- Fine pitch over entire screen
- Quick-heating low-power cathodes
- Soft flash
- Slotted shadow mask optimized for minimum moiré at 625 lines system
- Internal magnetic shield
- Internal multipole
- Reinforced envelope for push-through mounting
- The tube is supplied with a deflection unit of the AT6050 series; it forms a self-converging and raster correction free assembly

QUICK REFERENCE DATA

Deflection angle	90°
Minimum useful screen diagonal	41 cm
Overall length	369 mm
Neck diameter	22,5 mm
Hetating	6,3 V, 310 mA
Anode voltage	23 kV
Focusing voltage	31% of anode voltage

* Aberration Reducing Triode.

ELECTRON-OPTICAL DATA

Electron gun system		unitized triple-aperture electrodes; aberration reducing triode
Focusing method		electrostatic
Focus lens		hi-bi-potential
Deflection method		magnetic
Deflection angles		
diagonal		approx. 90°
horizontal		approx. 78°
vertical		approx. 60°

ELECTRICAL DATA

Capacitances		
anode to external conductive coating including rimband	$C_{a(m+m')}$	max. 1600 pF min. 1000 pF
grid 1 to all other electrodes	C_{g1}	15 pF
cathode of each gun to all other electrodes	C_{kR}, C_{kG}, C_{kB}	4 pF
focusing electrode to all other electrodes	C_{g3}	4 pF
Heating		indirect by AC or DC
heater voltage	V_f	6,3 V
heater current	I_f	310 mA

OPTICAL DATA

Screen	metal-backed vertical phosphor stripes; phosphor lines follow glass contour
Screen finish	high polish
Useful screen dimensions	
diagonal	min. 406,4 mm
horizontal axis	min. 325,1 mm
vertical axis	min. 243,8 mm
area	min. 793 cm^2
Positional accuracy of the screen with respect to the glass contour	see Fig. 1
Phosphors	
red	pigmented europium activated rare earth sulphide type
green	
blue	pigmented sulphide type
Centre-to-centre distance of vertical identical colour phosphor stripes, at screen centre	0,55 mm

Light transmission of face glass at centre		64%
Luminance at the centre of the screen	L	110 cd/m² *

A = 139,40 mm
B = 181,94 mm
C = 100,00 mm
D = 142,24 mm
E = 29,20 mm

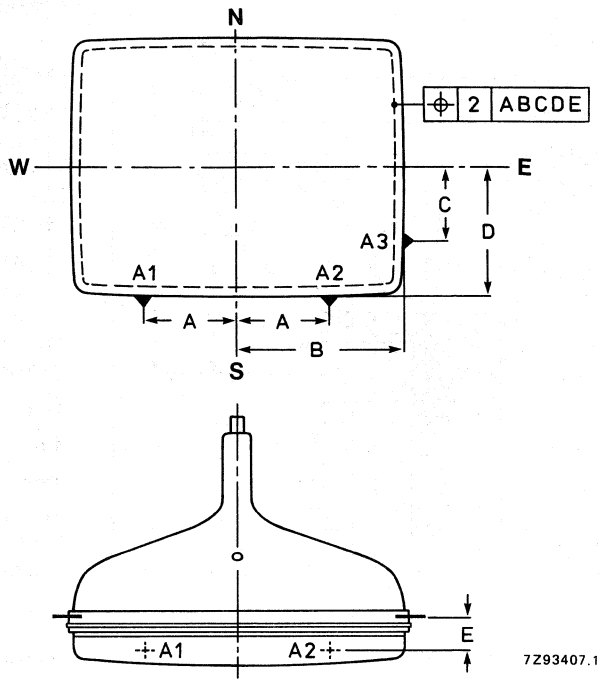

Fig. 1 Tube alignment.

MECHANICAL DATA (see Figs 2 to 10)

Overall length	369,1 ± 4,5 mm
Neck diameter	$22{,}5\ ^{+\ 1{,}4}_{-0{,}7}$ mm**
Bulb dimensions	
diagonal	max. 443,6 mm
width	max. 370,8 mm
height	max. 295,0 mm
Base	JEDEC B8-288
Anode contact	small cavity contact J1-21, IEC 67-III-2
Mounting position	anode contact on top
Net mass	approx. 9 kg

Handling

During shipment and handling the tube should not be subjected to accelerations greater than 35g in any direction.

* Tube settings adjusted to produce white D (x = 0,313, y = 0,329), focused raster, current density 0,4 μA/cm².

** In the region of 66 mm from the neck end, the maximum diameter is 23,2 mm.

MECHANICAL DATA (continued)

Notes are given after the drawings.

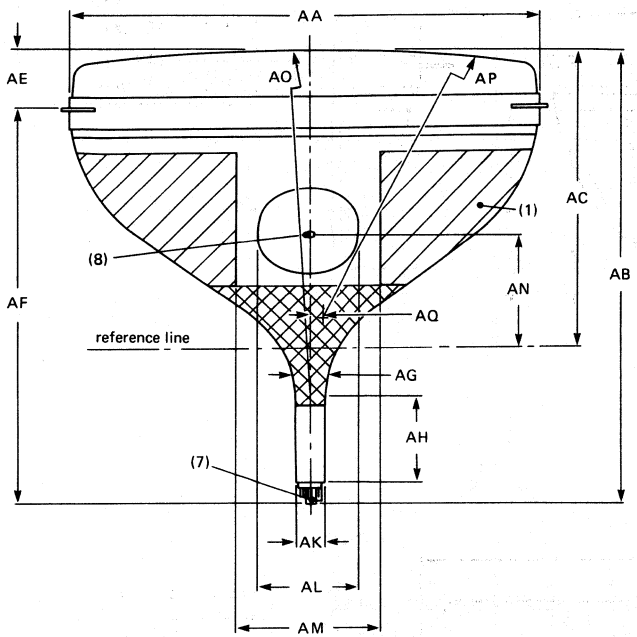

Dimensions in mm

AA	375 max
AB	369,1 ± 4,5
AC	230,3 ± 4
AE	54,8 max
AF	321,3 max
AG	$22{,}5\ ^{+1{,}4}_{-0{,}7}$
AH	66
AK	22,5 ± 0,7
AL	110 ± 10
AM	140 ± 3
AN	85,8 ± 3,2
AO	R1300 approx
AP	R1100 approx
AQ	17,7

Fig. 2

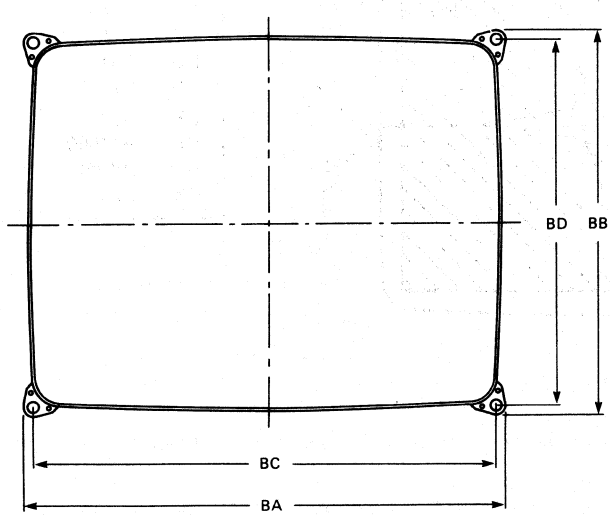

Dimensions in mm

BA	387 max
BB	311,5 max
BC	367
BD	291,5

Fig. 3

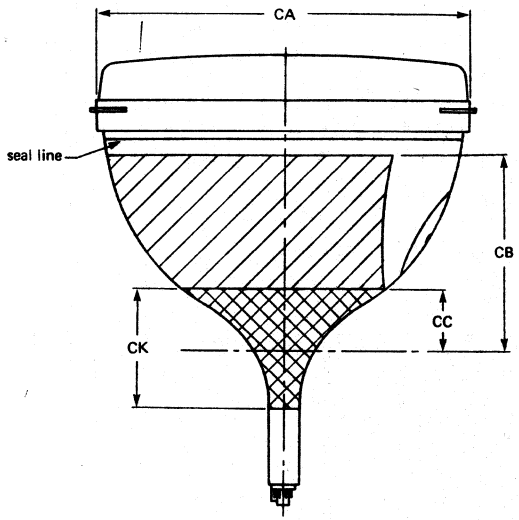

Fig. 4

Dimensions in mm

CA	299 max
CB	144,5 min
CC	49 max
CG	448 max
CK	100 max

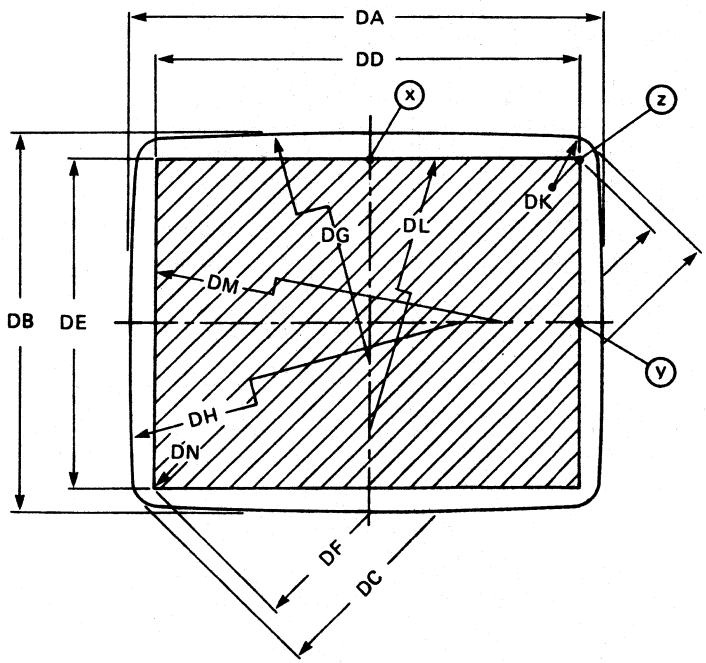

Fig. 5

Dimensions in mm

DA	369,2 ± 1,6
DB	293,4 ± 1,6
DC	442 ± 1,6
DD	325,1 min
DE	243,8 min
DF	406,4 min
DG	R2481
DH	R2163
DK	R22,4
DL	R11000
DM	R6300
DN	R0

MECHANICAL DATA (continued)

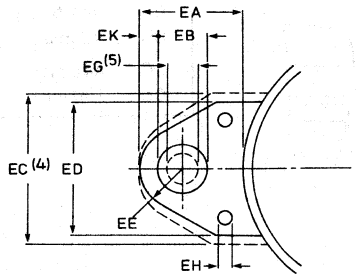

Fig. 6 Lug dimensions.

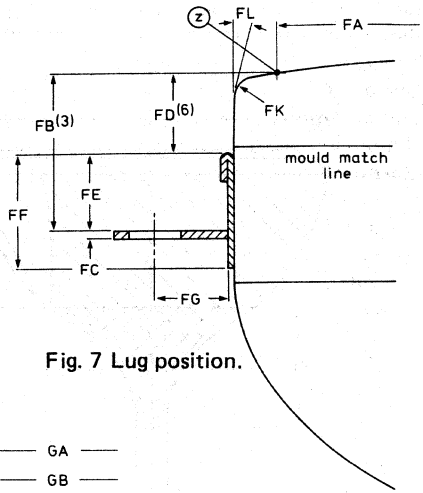

Fig. 7 Lug position.

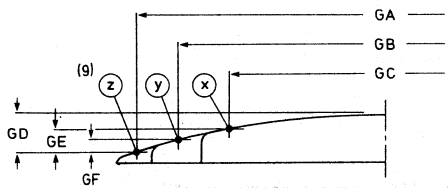

Fig. 8 Screen reference points.

Dimensions in mm

EA	20,4 ± 0,5
EB	11,5 ± 0,2
EC	35 max
ED	30 ± 1
EE	R8
EG	8
EH	3 min
EK	2,25 ± 0,3

Dimensions in mm

GA	406,4
GB	325,1
GC	243,8
GD	16,5 ± 2
GE	11,0 ± 2
GF	6,3 ± 2

Dimensions in mm

FA	406,4
FB	34,8 ± 1,5
FC	2,5
FD	15,8 min
FE	17,5 max
FF	24 max
FG	13,1
FK	R6
FL	5°

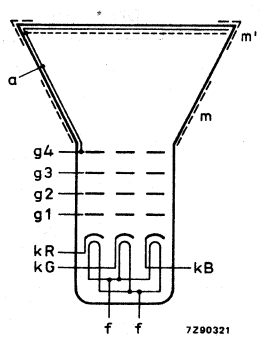

Fig. 9 Electrode configuration.

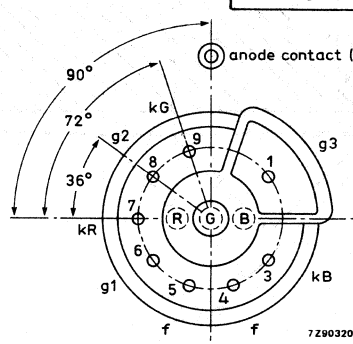

Fig. 10 Pin arrangement.

Notes to outline drawings

1. Configuration of outer conductive coating may be different, but will contain the contact areas as shown in the drawing.
2. To clean this area, wipe only with a soft lintless cloth.
3. One of the four mounting lugs may deviate (1,5 mm max.) from the plane of the other three lugs. This deviation is incorporated in the tolerance of ± 1,5 mm.
4. Minimum space to be reserved for mounting lug.
5. The position of the mounting screw in the cabinet must be within a circle of 8 mm diameter drawn around the true geometrical positions, i.e. corners of a rectangle of 367 mm x 291,5 mm.
6. Distance from point Z to any hardware.
7. The socket for this base should not be rigidly mounted; it should have flexible leads and be allowed to move freely. After mounting of the tube in the cabinet note that the position of the base can fall within a circle, having a diameter of max. 50 mm, concentric with an imaginary tube axis.
8. Small cavity contact J1-21, IEC 67-III-2.
9. The X, Y and Z reference points are located on the outside surface of the face plate at the intersection of the minor, major and diagonal screen axis respectively, with the minimum published screen.

Table 1 Sagittal heights with reference to screen centre at the edge of the minimum useful screen

coordinates x mm	coordinates y mm	sagittal height mm
0*	121,90	5,5
10	121,90	5,6
20	121,90	5,7
30	121,90	5,9
40	121,90	6,2
50	121,90	6,5
60	121,90	6,9
70	121,90	7,5
80	121,90	8,1
90	121,90	8,8
100	121,90	9,5
110	121,90	10,4
120	121,90	11,3
130	121,90	12,4
140	121,90	13,5
150	121,90	14,7
160	121,90	16,0
162,55**	121,90	16,3
162,55	120	16,1
162,55	110	15,2
162,55	100	14,3
162,55	90	13,5
162,55	80	12,8
162,55	70	12,2
162,55	60	11,6
162,55	50	11,2
162,55	40	10,8
162,55	30	10,5
162,55	20	10,3
162,55	10	10,2
162,55▲	0	10,2

* Point ⊗
** Diagonal
▲ Point Ⓥ

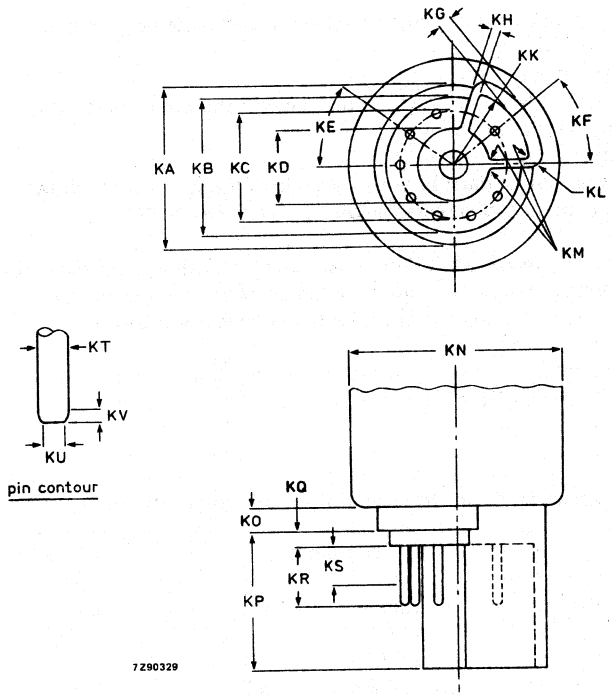

Dimensions in mm

KA	17,9 mm
KB	15,4 max
KC	12,0
KD	7,9 min; 8,2
KE	36°
KF	38°
KG	1,3 max
KH	0,8 min; 1,0 max
KK	R8,66 ± 0,1
KL	R1,0
KM	R0,25
KN	23,2 max
KO	2,7 max
KP	15,4 ± 0,2
KQ	1,6 max
KR	6,85 max
KS	4,5 min
KT	1,016 ± 0,076
KU	0,63 max
KV	0,4 min

Fig. 11 Base JEDEC B8-288.

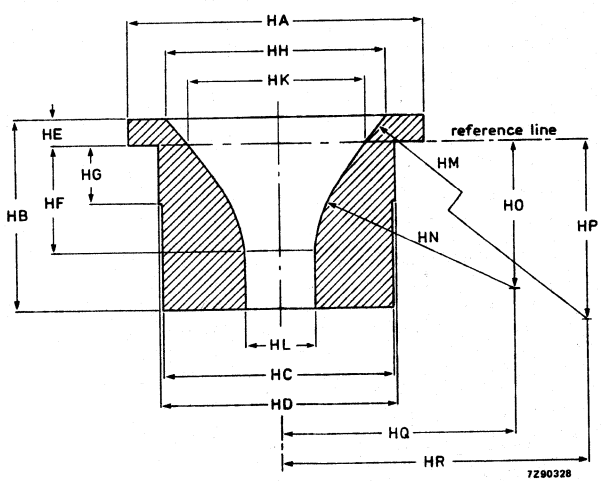

Dimensions in mm

HA	ϕ 100,00
HB	65,00
HC	ϕ 78,70
HD	ϕ 80,00
HE	9,20 ± 0,02
HF	36,22 ± 0,02
HG	20,00
HH	ϕ 75,48 ± 0,02
HK	ϕ 60,77 ± 0,02
HL	ϕ 23,90 $^{+0,04}_{-0}$
HM	R220,00
HN	R70,00
HO	50,30
HP	132,71
HQ	80,52
HR	205,85

Fig. 12 Reference line gauge; G-R90CJ10.

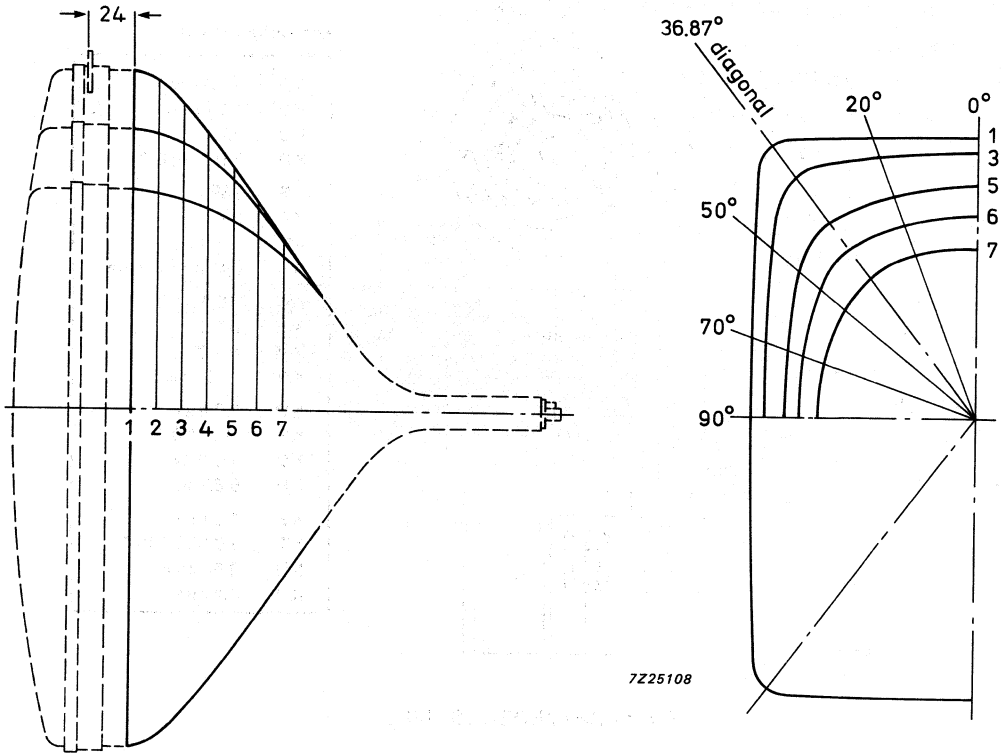

Fig. 13 Maximum cone contour.

Table 2 Cone contour data.

Dimensions in mm

section	nom. distance from section 1	distance from centre (max. values)					
		0°	20°	diag.	50°	70°	90°
1	0	184,3	195,1	221,0	187,3	154,9	146,1
2	20	179,7	188,7	209,5	180,0	150,4	142,2
3	40	169,8	175,2	186,7	167,5	143,2	136,2
4	60	154,8	157,5	162,9	151,8	134,2	128,7
5	80	134,0	135,7	137,7	131,8	121,7	118,3
6	100	110,2	111,4	111,1	108,5	104,9	103,6
7	120	82,9	82,3	82,8	83,0	82,7	82,2
8	140	52,6	52,7	52,7	52,7	52,7	52,7

TYPICAL OPERATING CONDITIONS

The voltages are specified with respect to grid 1.

Anode voltage	$V_{a,g4}$	23 kV
Grid 3 (focusing electrode) voltage	V_{g3}	6,7 to 7,6 kV
Grid 2 voltage for a spot cut-off voltage V_k = 120 V	V_{g2}	310 to 650 V

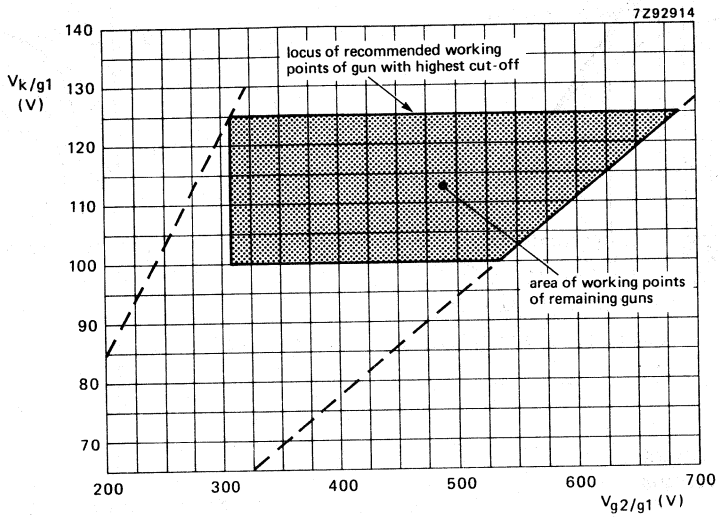

Fig. 14 Spot cut-off design chart.

Grid 2 voltage (V_{g2}) adjusted for highest gun spot cut-off voltage V_k = 125 V.

Remaining guns adjusted for spot cut-off by means of cathode voltage

V_{g2} range 310 to 685 V;

V_k range 100 to 125 V.

Adjustment procedure:

Set the cathode voltage (V_k) for each gun at 125 V; increase the grid 2 voltage (V_{g2}) from approx. 300 V to the value at which one of the colours become just visible. Now decrease the cathode voltage of the remaining guns so that the other colours also become visible.

EQUIPMENT DESIGN VALUES

The values are valid for anode voltages between 20 and 27,5 kV.
The voltages are specified with respect to grid 1.

Grid 3 (focusing electrode) voltage	V_{g3}	29 to 33% of anode voltage
Grid 2 voltage and cathode voltage for visual extinction of focused spot	V_{g2} and V_k	see Fig. 14
Difference in cut-off voltages between guns in any tube	ΔV_k	lowest value > 80% of highest value
Heater voltage	V_f	6,3 V at zero beam current
Video drive characteristics		see Fig. 17
Grid 3 (focusing electrode) current	I_{g3}	−2 to + 2 μA
Grid 2 current	I_{g2}	−2 to + 2 μA
Grid 1 current under cut-off conditions	I_{g1}	−2 to + 2 μA

To produce white of 6500K + 7 M.P.C.D.
(CIE co-ordinates x = 0,313, y = 0,329)

Percentage of the total anode current supplied by each gun (typical)

red gun	38,3%
green gun	35,8%
blue gun	25,9%

Ratio of anode currents

red gun to green gun	min.	0,8
	average	1,1
	max.	1,4
red gun to blue gun	min.	1,1
	average	1,5
	max.	1,9
blue gun to green gun	min.	0,5
	average	0,7
	max.	0,9

LIMITING VALUES (Design maximum rating system unless otherwise stated)

The voltages are specified with respect to grid 1.

Anode voltage	$V_{a,g4}$	max.	27,5	kV	notes 1, 2, 3
		min.	20	kV	notes 1 and 4
Long-term average current for three guns	I_a	max.	750	μA	note 5
Grid 3 (focusing electrode) voltage	V_{g3}	max.	11	kV	
Grid 2 voltage, peak	V_{g2p}	max.	1000	V	
Cathode voltage					
positive	V_k	max.	400	V	
positive operating cut-off, during adjustment	V_k	max.	200	V	
negative	$-V_k$	max.	0	V	
negative peak	$-V_{kp}$	max.	2	V	
Heater voltage	V_f		6,3 V	$^{+5}_{-10}$ %	notes 1 and 6
Heater-cathode voltage					
heater negative with respect to cathode					
after equipment warm-up period	V_{kf}	max.	200	V	
heater positive with respect to cathode	$-V_{kfp}$	peak	200	V	note 1
	$-V_{kf}$	max.	0	V	
		(DC component value)			

Notes to the limiting values

1. Absolute maximum rating system.
2. The pictures tube does not emit X-radiation above 1 μSv/h when operated within its absolute maximum ratings.
3. During adjustment on the production line this value is likely to be surpassed considerably. It is therefore strongly recommended to first make the necessary adjustments for normal operation without picture tube.
4. Operation of the tube at lower voltages impairs the luminance and resolution.
5. The short-term average anode current should be limited by circuitry to 1000 μA.
6. For maximum cathode life and optimum performance, it is recommended that the heater supply be designed for 6,3 V at zero beam current.

FLASHOVER PROTECTION

With the high voltage used with this tube (max. 27,5 kV) internal flashovers may occur. As a result of the Soft-Flash technology these flashover currents are limited to approx. 60 A offering higher set reliability, optimum circuit protection and component savings.
Primary protective circuitry using properly grounded spark gaps and series isolation resistors (preferably carbon composition) is still necessary to prevent tube damage. The spark gaps should be connected to all picture tube electrodes at the socket according to the figure below; they are not required on the heater pins. No other connections between the outer conductive coating and the chassis are permissible.
The spark gaps should be designed for a breakdown voltage at the focusing electrode (g3) of 12 kV ($1,5 \times V_{g3}$ max. at $V_{a,g4}$ = 25 kV), and at the other electrodes of 1,5 to 2 kV.
The values of the series isolation resistors should be as high as possible (min. 1,5 kΩ) without causing deterioration of the circuit performance. The resistors should be able to withstand an instantaneous surge of 20 kV for the focusing circuit and 12 kV for the remaining circuits without arcing.
Additional information is available on request.

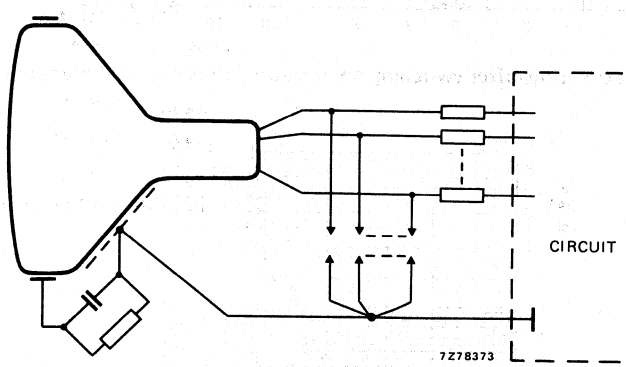

Fig. 15 Flashover protection circuit.

BEAM CORRECTIONS

Maximum centring error in any direction after colour purity, static convergence, and horizontal centre line correction, measured with deflection coils in nominal position	3 mm

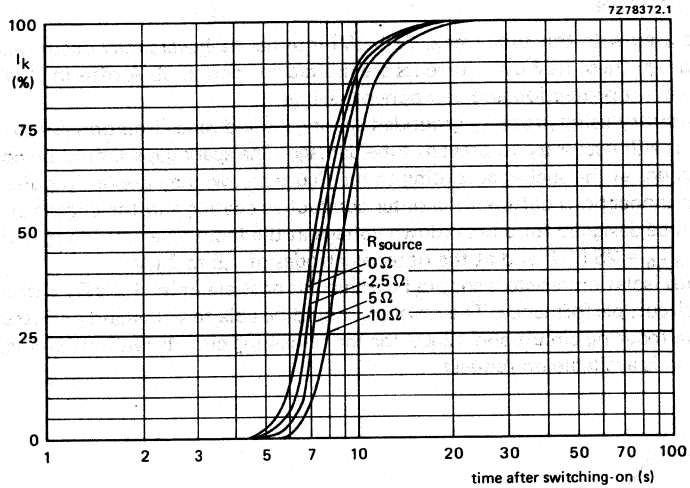

Fig. 16 Cathode heating time after switching on, measured under typical operating conditions.

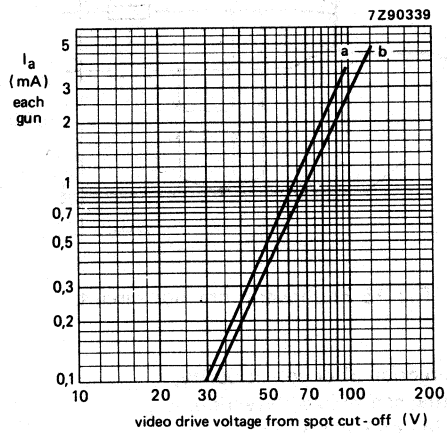

Fig. 17 Typical cathode drive characteristics.

V_f = 6,3 V;

$V_{a,g4}$ = 23 kV;

V_{g3} adjusted for focus;

V_{g2} (each gun) adjusted to provide spot cut-off for V_k = 100 V (curve a), and V_k = 125 V (curve b).

For optimum picture performance it is recommended that the cathodes are not driven below + 1 V.

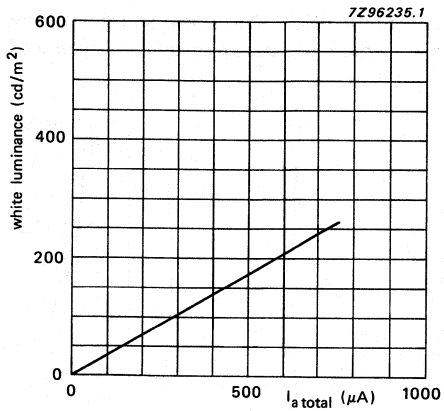

Fig. 18 Luminance at the centre of the screen as a function of I_{total}.

$V_{a,g4}$ = 23 kV.
Scanned area = 325,1 mm x 243,8 mm;
CIE co-ordinates x = 0,313, y = 0,329.

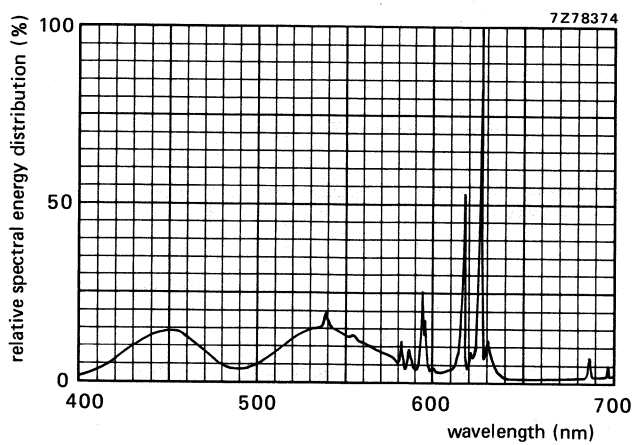

Simultaneous excitation of red, green and blue phosphor, measured in a tube, to produce white of x = 0,313, y = 0,329. Exact shape of the peaks depends on the resolution of the measuring apparatus.

Colour co-ordinates:	x	y
red	0,635	0,340
green	0,315	0,600
blue	0,150	0,060

DEGAUSSING

The picture tube has an internal magnetic shield. This shield and the shadow mask with its suspension system may be provided with an automatic degaussing system, consisting of one magnetic coil winding mounted on the cone of the picture tube.

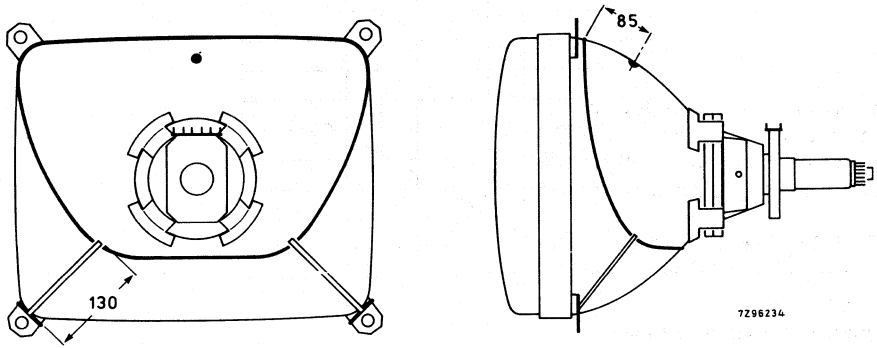

Fig. 20 Position of degaussing coil on the picture tube; dimensions are given in mm.

For proper degaussing an initial magnetomotive force (MMF) of 600 ampere-turns is required in the coil. This MMF has to be gradually decreased by appropriate degaussing circuitry. In the steady state, no significant MMF should remain in the coil ($\leqslant 0{,}6$ ampere-turns). If single-phase power rectification is employed in the TV circuitry, provision should be included to prevent asymmetric distortion of the AC voltage applied to the degaussing circuit due to high DC inrush currents. An example of a degaussing circuit and coil data for various mains voltages are given below.

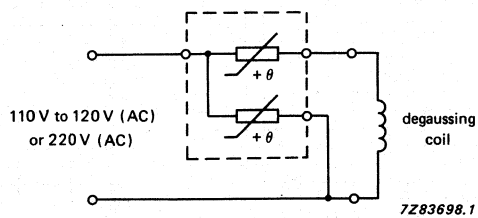

Fig. 21 Degaussing circuit using dual PTC thermistor.

Table 3 Data of degaussing coil.

	110 V to 120 V (AC) mains	220 V (AC) mains
Circumference	113 cm	113 cm
Number of turns	70	120
Copper wire diameter	0,50 mm	0,36 mm
Resistance	6,8 Ω	23,5 Ω
Catalogue number of appropriate dual PTC thermistor	8222 298 73091	2322 662 98009

SUPERSEDES DATA OF OCTOBER 1987

FLAT SQUARE COLOUR PICTURE TUBE ASSEMBLY

- Factory preset tube/coil assembly
- Self-converging and raster correction free
- 41 cm, 90° colour picture tube A41EAM00X
- Hybrid saddle toroidal deflection unit of the AT6050/00

QUICK REFERENCE DATA

Deflection angle	90	°
Minimum useful screen diagonal	41	cm
Overall length	369	mm
Neck diameter	22,5	mm

MECHANICAL DATA

Dimensions in mm

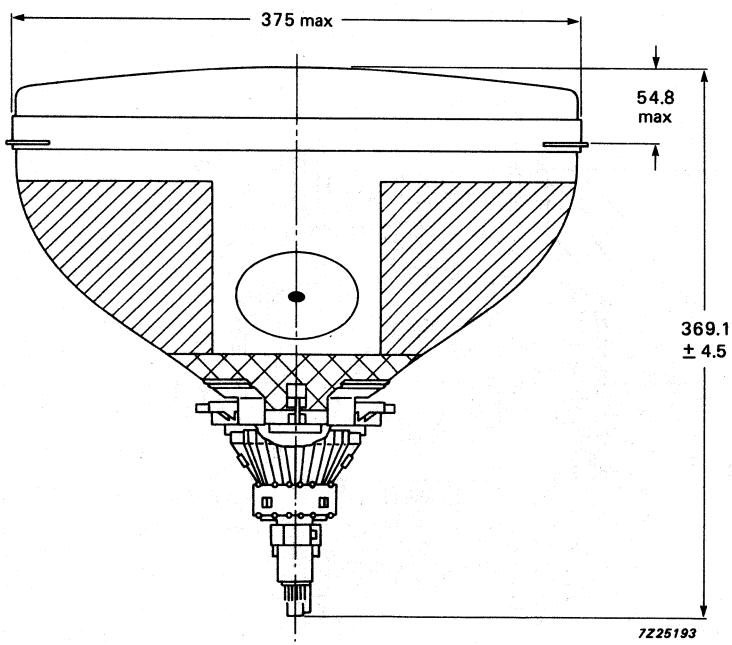

Fig. 1 Colour picture tube assembly.

MECHANICAL DATA

Dimensions in mm

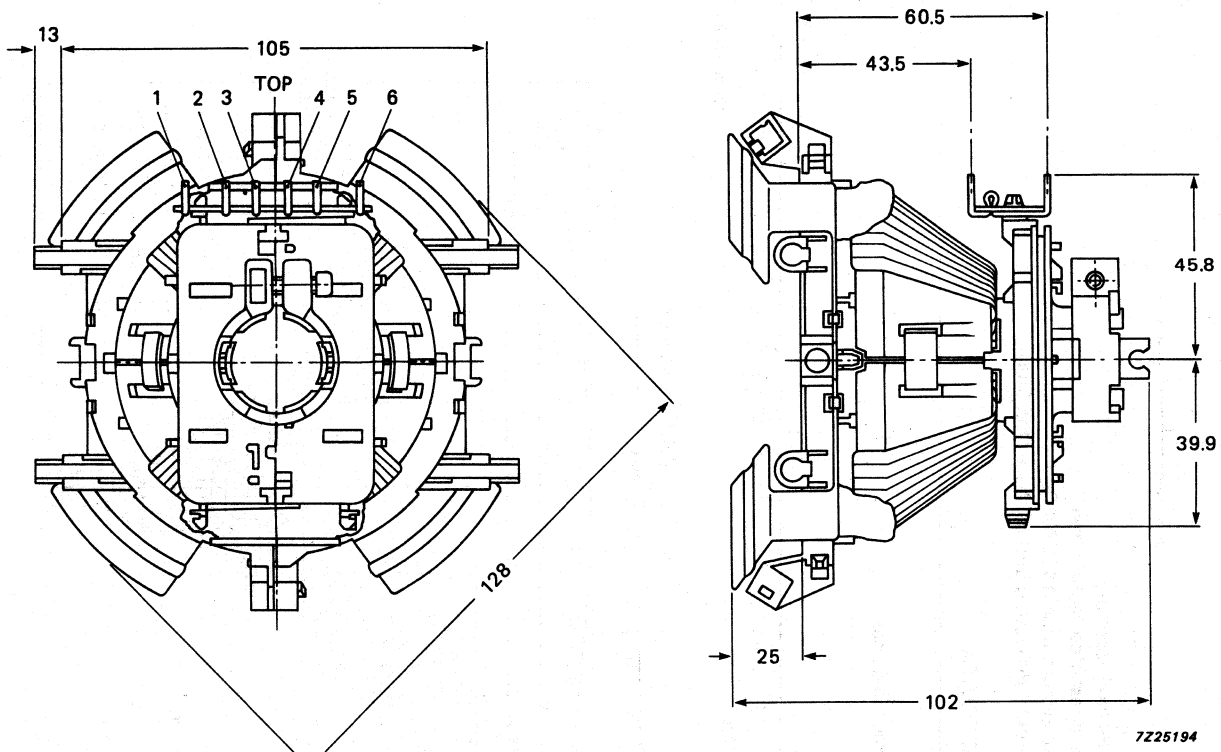

Fig. 2 Deflection unit AT6050/00.

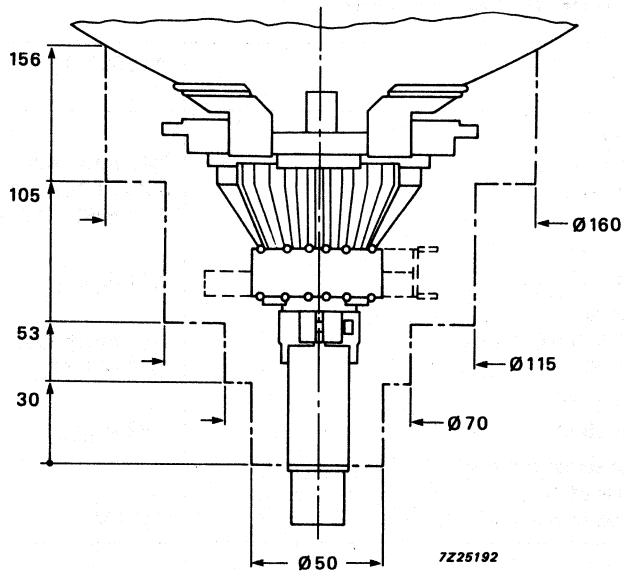

Fig. 3 Yoke clearance.

Maximum operating temperature (average copper temperature measured with resistance method)	+ 90 °C
Storage temperature range	−25 to +90 °C
Flame retardent	according to UL 1413, category 94-V1
Torque on neck clamp screw	1,0 Nm

ENVIRONMENTAL TEST SPECIFICATIONS OF DEFLECTION UNITS

Vibration	IEC 68-2-6 (test Fc)
Shock	IEC 68-2-27 (test Ea)
Bump	IEC 68-2-29 (test Eb; 25g)
Cold	IEC 68-2-1 (test Ab)
Dry heat	IEC 68-2-2 (test Bb)
Damp heat, steady state	IEC 68-2-3 (test Ca)
Cyclic damp heat	IEC 68-2-30 (test Db)
Change of temperature	IEC 68-2-14 (test Nb)

ELECTRICAL DATA OF DEFLECTION UNIT

parameter	AT6050/00
Line deflection coils	
inductance at 1 V (rms), 1 kHz	2,43 mH ± 4%
resistance at 25 °C	3,2 Ω ± 10%
magnetic flux	5,14 mWb ± 2,5%
Line deflection current	
edge to edge, at 25 kV	2,11 $A_{(p-p)}$
Field deflection coils	
inductance at 1 V (rms), 1 kHz	26,2 mH ± 10%
resistance at 25 °C	12,2 Ω ± 7%
Field deflection current,	
edge to edge, at 25 kV	0,82 $A_{(p-p)}$
Cross-talk: voltage across the field coils when a voltage of 10 V, 15625 Hz is applied to the line coils	< 0,2 V

Insulation resistance at 1 kV (DC)

between line and field coils	> 500 MΩ
between line coil and core clamp	> 500 MΩ
between field coil and core clamp	> 10 MΩ

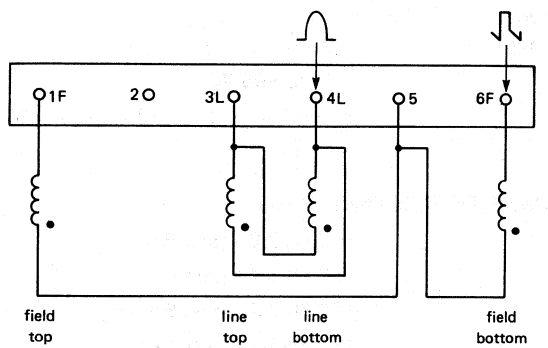

Fig. 4 Connection diagram.

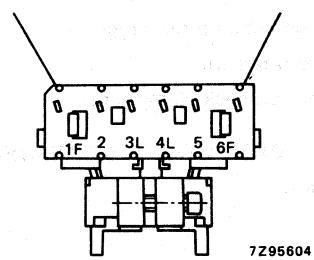

Fig. 5 Terminal location.

The beginning of the windings is indicated with ●.

Hi-Bri COLOUR PICTURE TUBE

- 90° deflection
- In-line gun, electrostatic bi-potential focus
- 29,1 mm neck diameter
- Hi-Bri screen with pigmented phosphor featuring high brightness and increased contrast performance
- Soft-Flash technology offering improved set reliability
- Slotted shadow mask optimized for minimum moiré
- Fine pitch over entire screen
- Phosphor lines follow glass contour
- Quick-heating cathodes
- Internal magnetic shield
- Reinforced envelope for push-through mounting
- Anti-crackle coating
- When combined with an appropriate hybrid saddle toroidal deflection unit (e.g. AT1215), it forms a self-converging assembly; dynamic convergence is not required.

QUICK REFERENCE DATA

Deflection angle	90°
Face diagonal	42 cm
Overall length	368 mm
Neck diameter	29,1 mm
Heating	6,3 V, 685 mA
Anode voltage	25 kV
Focusing voltage	20% of anode voltage

ELECTRON-OPTICAL DATA

Electron gun system		unitized triple-aperture electrodes
Focusing method		electrostatic
Focus lens		bi-potential
Deflection method		magnetic
Deflection angles		
diagonal		approx. 90°
horizontal		approx. 78°
vertical		approx. 60°

ELECTRICAL DATA

Capacitances		
anode to external conductive coating including rimband	$C_{a(m+m')}$	> 1000 pF
grid 1 to all other electrodes	C_{g1}	15 pF
cathode of each gun to all other electrodes	C_{kR}, C_{kG}, C_{kB}	5 pF
focusing electrode to all other electrodes	C_{g3}	6 pF
Heating		indirect by AC or DC
heater voltage	V_f	6,3 V
heater current	I_f	685 mA

OPTICAL DATA

Screen	metal-backed vertical phosphor stripes; phosphor lines follow glass contour
Screen finish	satinized
Useful screen dimensions	
diagonal	min. 382,3 mm
horizontal axis	min. 322,1 mm
vertical axis	min. 241,6 mm
area	min. 755 cm^2
Phosphors	
red	pigmented europium activated rare earth
green	sulphide type
blue	pigmented sulphide type
Centre-to-centre distance of vertical identical colour phosphor stripes, at screen centre	0,70 mm
Light transmission of face glass at centre	66,8%

MECHANICAL DATA (see Figs 1 to 9)

Overall length	368,4 ± 5 mm
Neck diameter	$29{,}1\ ^{+1{,}4}_{-0{,}7}$ mm *
Bulb dimensions	
diagonal	max. 418,8 mm
width	max. 360,6 mm
height	max. 281,8 mm
Base	12-pin base JEDEC B12-262
Anode contact	small cavity contact J1-21, IEC 67-III-2
Mounting position	anode contact on top
Net mass	approx. 8 kg

Handling

During shipment and handling the tube should not be subjected to accelerations greater than 350 m/s^2 in any direction.

* In the region of 70 mm from the neck end, the maximum diameter is 30 mm.

MECHANICAL DATA (continued)

Dimensions in mm

Notes are given after the drawings.

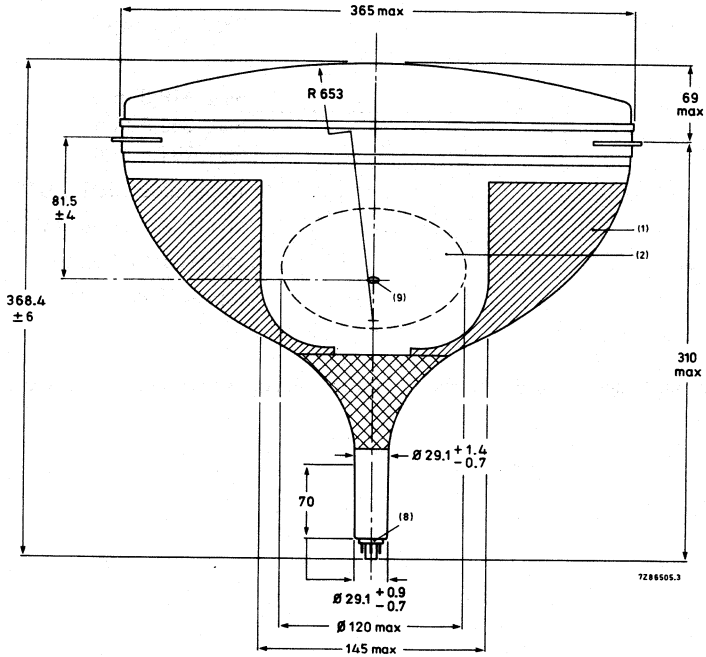

Fig. 1.

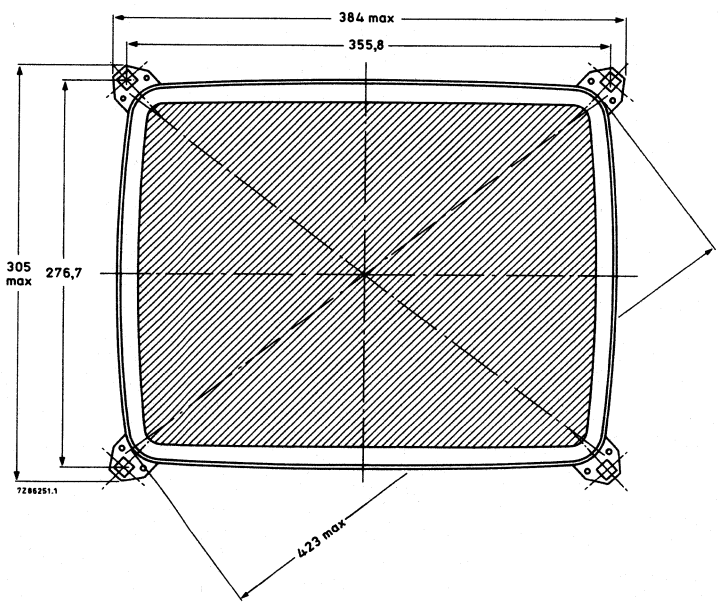

Fig. 2.

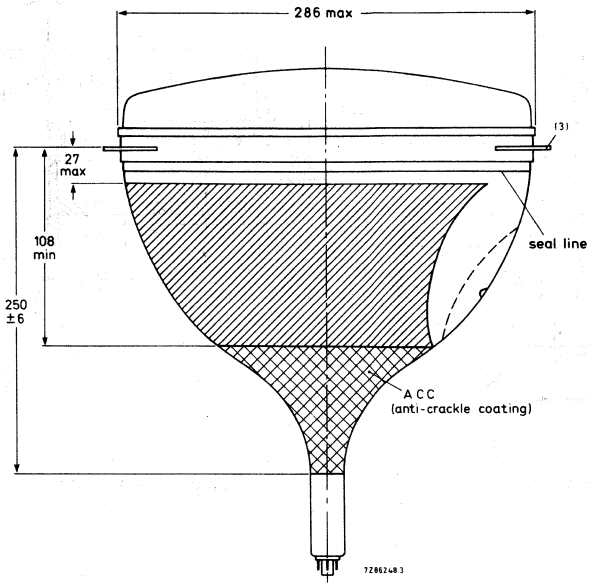
286 max
(3)
27
max
108
min
250
±6
seal line
A C C
(anti-crackle coating)
7Z86248.3

Fig. 3.

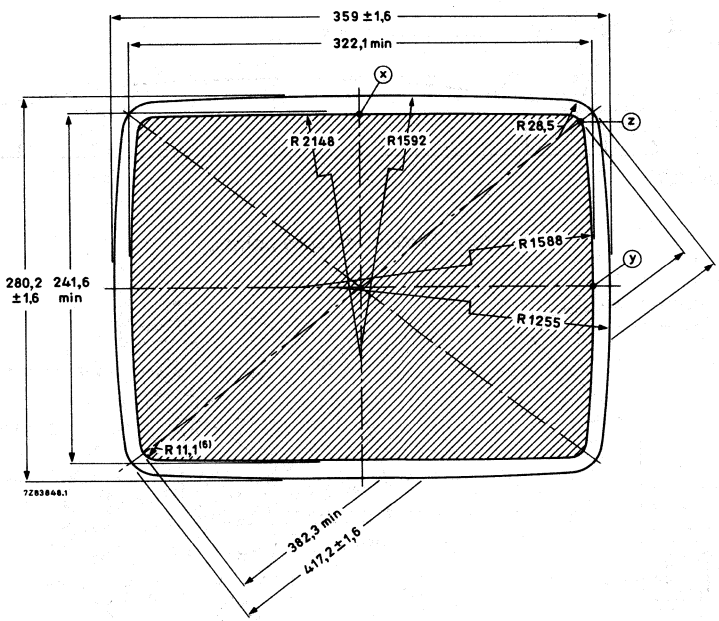
359 ±1,6
322,1 min
R 214.8
R1592
R 28,5
R1588
R1255
280,2
±1,6
241,6
min
R 11,1 (6)
7Z83848.1
382,3 min
417,2±1,6

Fig. 4.

MECHANICAL DATA (continued)

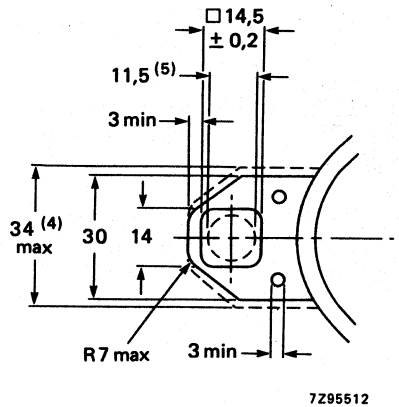

Fig. 5 Lug dimensions.

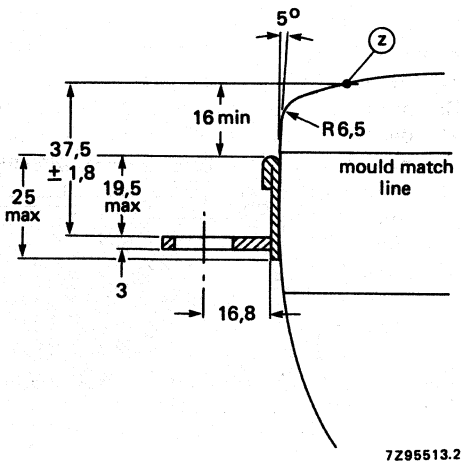

Fig. 6 Lug position.

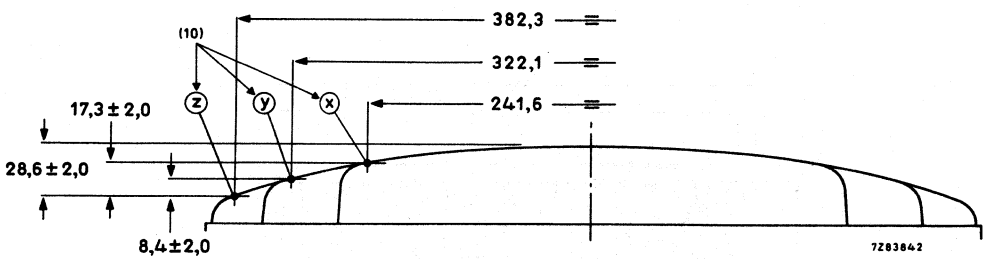

Fig. 7 Screen reference points.

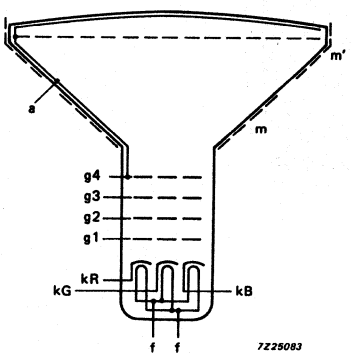

Fig. 8 Electrode configuration.

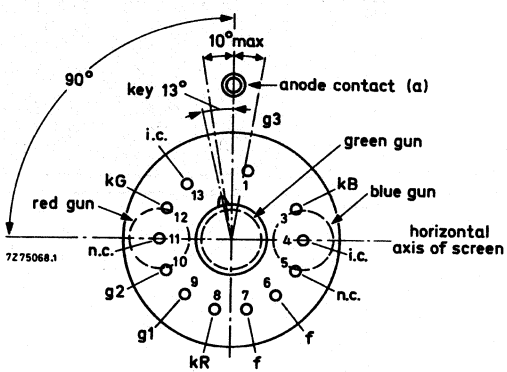

Fig. 9 Pin arrangement.

Notes to outline drawings

1. Configuration of outer conductive coating may be different, but will contain the contact area as shown in the drawing.
2. To clean this area, wipe only with a soft lintless cloth.
3. One of the four mounting lugs may deviate (1,5 mm max.) from the plane of the other three lugs. This deviation is incorporated in the tolerance of ± 1,8 mm.
4. Minimum space to be reserved for mounting lug.
5. The position of the mounting screw in the cabinet must be within a circle of 7,5 mm diameter drawn around the true geometrical positions, i.e. the corners of a rectangle of 355,8 mm x 276,7 mm.
6. Co-ordinates for radius R = 11,1 mm: x = 146,52 mm, y = 104,72 mm.
7. Not applicable.
8. The socket for this base should not be rigidly mounted; it should have flexible leads and be allowed to move freely. After mounting of the tube in the cabinet note that the position of the base can fall within a circle, having a diameter of max. 50 mm, concentric with an imaginary tube axis.
9. Small cavity contact J1-21, IEC67-III-2.
10. The X, Y and Z reference points are located on the outside surface of the face plate at the intersection of the minor, major and diagonal screen axis respectively, with the minimum published screen.

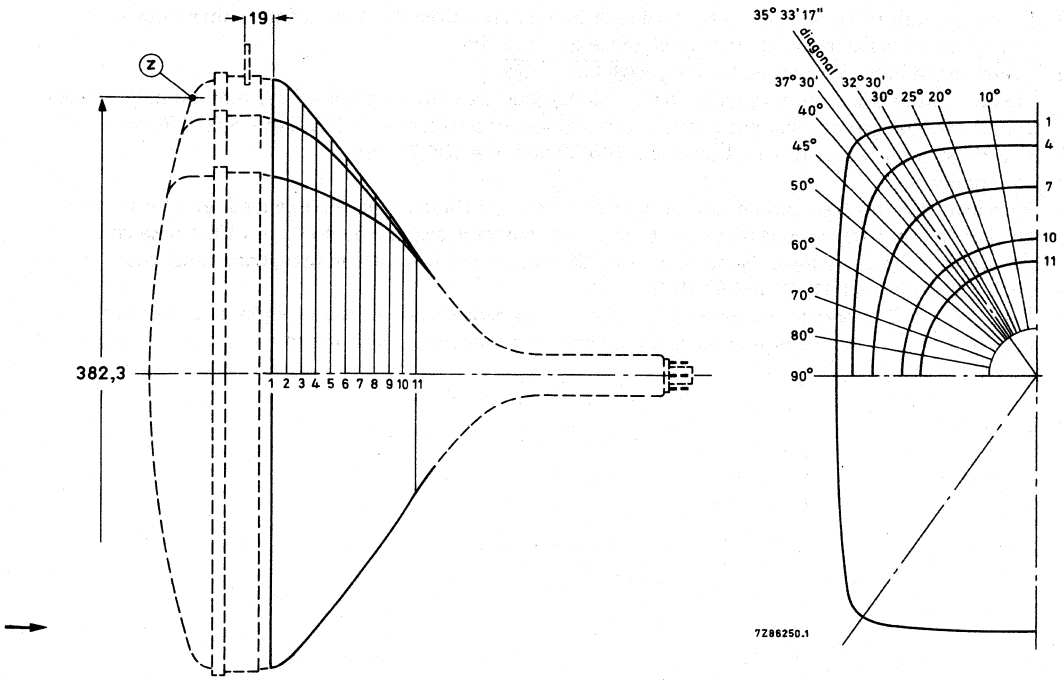

Fig. 10 Cone contour.

Table 1 Cone contour data

Dimensions in mm

section	nom. distance from section 1	distance from centre (max. values)														
		0°	10°	20°	25°	30°	32° 30'	diag. axes	37° 30'	40°	45°	50°	60°	70°	80°	90°
1	0	179,1	181,5	189,1	195,0	202,1	205,7	208,5	207,8	203,3	189,6	177,2	159,0	147,6	141,3	139,3
2	10	176,1	178,4	185,4	190,7	196,9	199,9	201,9	200,9	196,4	183,9	172,5	155,4	144,4	138,4	136,5
3	20	170,8	172,8	178,7	182,9	187,5	189,3	190,0	188,9	185,4	175,4	165,5	150,0	139,9	134,2	132,4
4	30	164,1	165,8	170,8	174,1	177,2	178,2	177,9	176,7	173,9	166,0	157,8	144,2	135,1	129,9	128,2
5	40	155,6	157,1	161,4	164,0	166,1	166,4	165,6	164,3	161,9	155,7	149,1	137,9	130,0	125,4	123,9
6	50	145,1	146,5	150,1	152,2	153,6	153,6	152,8	151,7	149,9	145,1	140,1	131,1	124,5	120,6	119,3
7	60	133,6	134,7	137,4	138,9	139,9	140,0	139,5	138,9	137,8	134,6	130,9	123,8	118,6	115,4	114,3
8	70	121,8	122,6	124,4	125,3	125,9	125,9	125,8	125,6	125,1	123,5	121,3	116,4	112,2	109,6	108,7
9	80	109,5	110,0	110,9	111,3	111,6	116,6	111,6	111,6	111,5	110,9	110,1	107,6	105,0	103,1	102,4
10	90	96,5	96,6	96,8	96,9	97,0	97,1	97,1	97,2	97,2	97,1	97,0	96,3	95,4	94,5	94,1
11	100	82,2	82,1	82,1	82,1	82,2	82,2	82,2	82,2	82,2	82,2	82,2	82,2	82,2	82,2	82,1

12-pin base; JEDEC B12-262

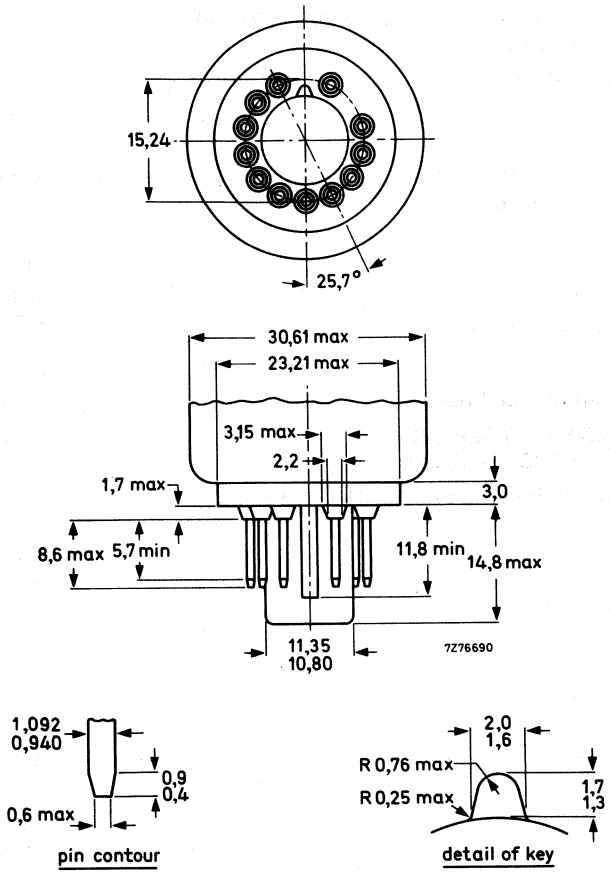

Fig. 11 JEDEC base.

TYPICAL OPERATING CONDITIONS

The voltages are specified with respect to grid 1.

Anode voltage	$V_{a,g4}$	25	kV
Grid 3 (focusing electrode) voltage	V_{g3}	4,5 to 5,3	kV
Grid 2 voltage for a spot cut-off voltage V_k = 120 V	V_{g2}	310 to 560	V
Luminance at the centre of the screen *	L	130	cd/m² ←

* Tube settings adjusted to produce white of 6500K + 7 M.P.C.D. (x = 0,313, y = 0,329), focused raster, current density 0,4 μA/cm².

EQUIPMENT DESIGN VALUES

The values are valid for anode voltages between 20 and 27,5 kV.
The voltages are specified with respect to grid 1.

Grid 3 (focusing electrode) voltage	V_{g3}	18,8 to 22% of anode voltage
Grid 2 voltage and cathode voltage for visual extinction of focused spot	V_{g2} and V_k	see Fig. 13*
Difference in cut-off voltages between guns in any tube	ΔV_k	lowest value > 80% of highest value
Video drive characteristics		see Fig. 14**
Grid 3 (focusing electrode) current	I_{g3}	−5 to + 5 μA
Grid 2 current	I_{g2}	−5 to + 5 μA
Grid 1 current under cut-off conditions	I_{g1}	−5 to + 5 μA

To produce white of 6500K + 7 M.P.C.D.
(CIE co-ordinates x = 0,313, y = 0,329)

Percentage of the total anode current supplied by each gun (typical)

red gun	38,3%
green gun	35,8%
blue gun	25,9%

Ratio of anode currents

red gun to green gun	min.	0,8
	average	1,1
	max.	1,4
red gun to blue gun	min.	1,1
	average	1,5
	max.	1,9
blue gun to green gun	min.	0,5
	average	0,7
	max.	0,9

* The common V_{g2} should be adjusted as follows:
Set the cathode voltage, V_k, for each gun at 120 V. Increase the V_{g2} from about 300 V to the value at which the raster of one of the guns becomes just visible. Now decrease the V_k of the remaining guns so that the rasters of these guns also become visible.

** For optimum picture performance it is recommended that the cathodes are not driven below + 10 V.

LIMITING VALUES (Design maximum rating system unless otherwise stated)

The voltages are specified with respect to grid 1.

Anode voltage	$V_{a,g4}$	max.	27,5	kV	notes 1, 2, 3
		min.	20	kV	notes 1 and 4
Long-term average current for three guns	I_a	max.	750	μA	note 5
Grid 3 (focusing electrode) voltage	V_{g3}	max.	7	kV	
Grid 2 voltage, peak	V_{g2p}	max.	1000	V	
Cathode voltage					
positive	V_k	max.	400	V	
positive operating cut-off	V_k	max.	200	V	
negative	$-V_k$	max.	0	V	
negative peak	$-V_{kp}$	max.	2	V	
Heater voltage	V_f	6,3 V	+ 5 −10	% %	notes 1 and 6
Heater-cathode voltage					
heater negative with respect to cathode					
during equipment warm-up period not exceeding 15 s	V_{kf}	max.	450	V	note 1
after equipment warm-up period	V_{kf}	max.	250	V	
heater positive with respect to cathode	$-V_{kfp}$	peak	200	V	note 1
	$-V_{kf}$	max. (DC component value)	0	V	

Notes to the limiting values

1. Absolute maximum rating system.
2. The picture tube does not emit X-radiation above 1 μSv/h when operated within its absolute maximum ratings.
3. During adjustment on the production line this value is likely to be surpassed considerably. It is therefore strongly recommended to first make the necessary adjustments for normal operation without picture tube.
4. Operation of the tube at lower voltages impairs the luminance and resolution.
5. The short-term average anode current should be limited by circuitry to 1000 μA.
6. For maximum cathode life and optimum performance, it is recommended that the heater supply be designed for 6,3 V at zero beam current.

FLASHOVER PROTECTION

With the high voltage used with this tube (max. 27,5 kV) internal flashovers may occur. As a result of the Soft-Flash technology these flashover currents are limited to approx. 60 A offering higher set reliability, optimum circuit protection and component savings.
Primary protective circuitry using properly grounded spark gaps and series isolation resistors (preferably carbon composition) is still necessary to prevent tube damage. The spark gaps should be connected to all picture tube electrodes at the socket according to the figure below; they are not required on the heater pins. No other connections between the outer conductive coating and the chassis are permissible.
The spark gaps should be designed for a breakdown voltage at the focusing electrode (g3) of 8,5 kV ($1,5 \times V_{g3}$ max. at $V_{a,g4} = 25$ kV), and at the other electrodes of 1,5 to 2 kV.
The values of the series isolation resistors should be as high as possible (min. 1,5 kΩ) without causing deterioration of the circuit performance. The resistors should be able to withstand an instantaneous surge of 20 kV for the focusing circuit and 12 kV for the remaining circuits without arcing.
Additional information is available on request.

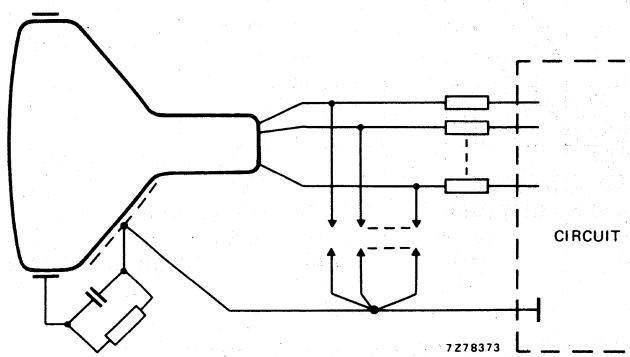

Fig. 12 Flashover protection circuit.

BEAM CORRECTIONS

Maximum required correction for register, as measured at the centre of the screen in any direction	0,08 mm
Centre convergence displacement of the blue and red beams is contained within a circle; max. diameter of circle	4,5 mm
Centre convergence displacement between the green beam and converged blue and red beams is contained within a circle; maximum diameter of circle	2,3 mm
Maximum centring error in any direction after colour purity, static convergence, and horizontal centre line correction, measured with deflection coils in nominal position	5 mm

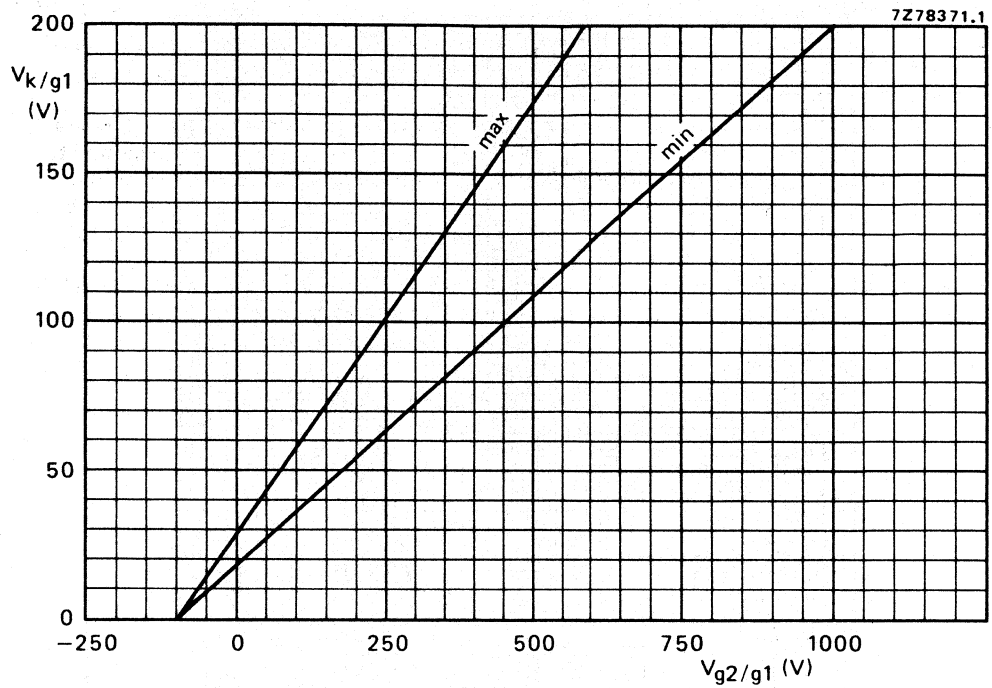

Fig. 13 Spot cut-off design chart (cathode drive), V_{g3} adjusted for focus, $V_{a,g4}$ = 20 to 27,5 kV.

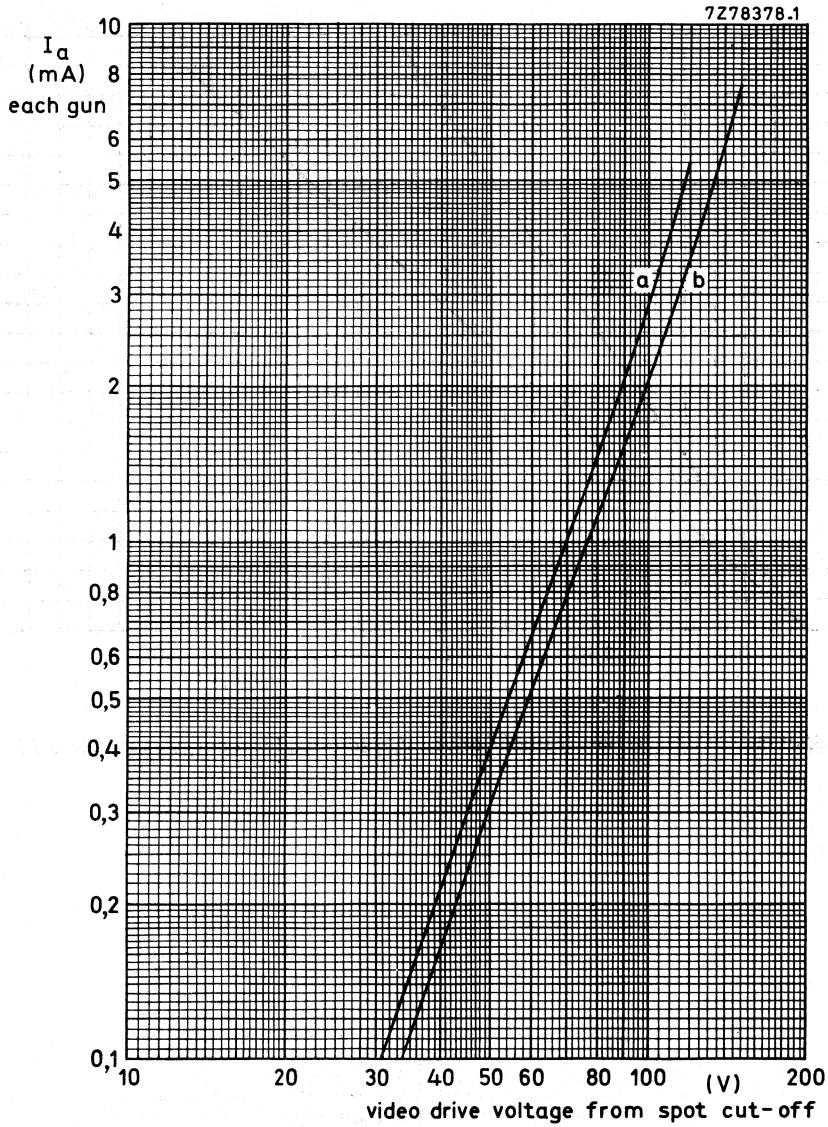

Fig. 14 Typical cathode drive characteristics.

V_f = 6,3 V;
$V_{a,g4}$ = 25 kV;
V_{g3} adjusted for focus;
V_{g2} adjusted to provide spot cut-off for desired fixed V_k.

curve a = spot cut-off = 120 V;
curve b = spot cut-off = 150 V.

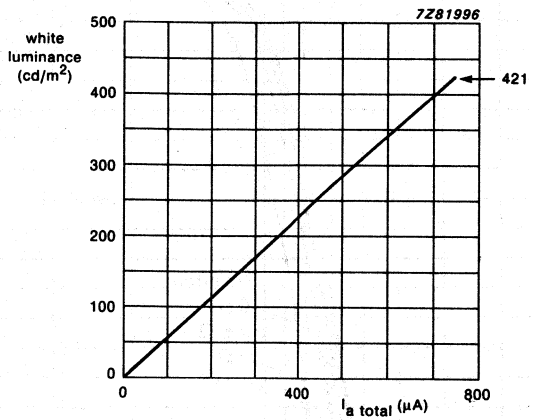

Fig. 15 Luminance at the centre of the screen as a function of I_{total}.
$V_{a,g4}$ = 25 kV, V_f = 6,3 V, V_{g3} adjusted for optimum focus.
Scanned area = 322,1 mm x 241,6 mm, CIE co-ordinates x = 0,313, y = 0,329.

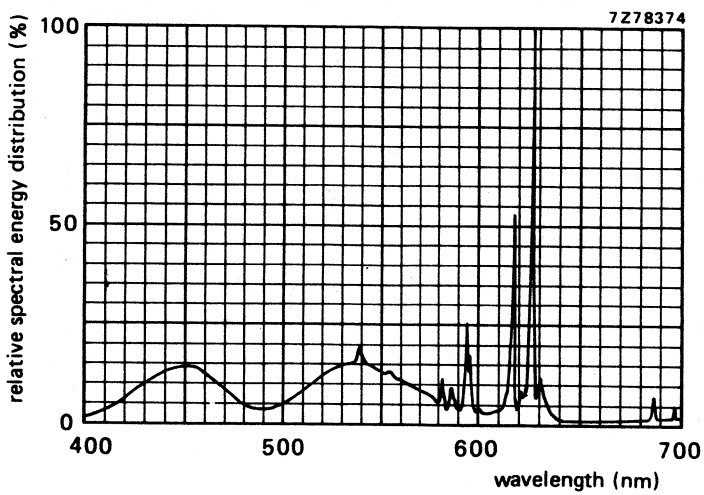

Fig. 16 Simultaneous excitation of red, green and blue phosphor, measured in a tube, to produce white of x = 0,313, y = 0,329. Exact shape of the peaks depends on the resolution of the measuring apparatus.

Colour co-ordinates:	x	y
red	0,635	0,340
green	0,315	0,600
blue	0,150	0,060

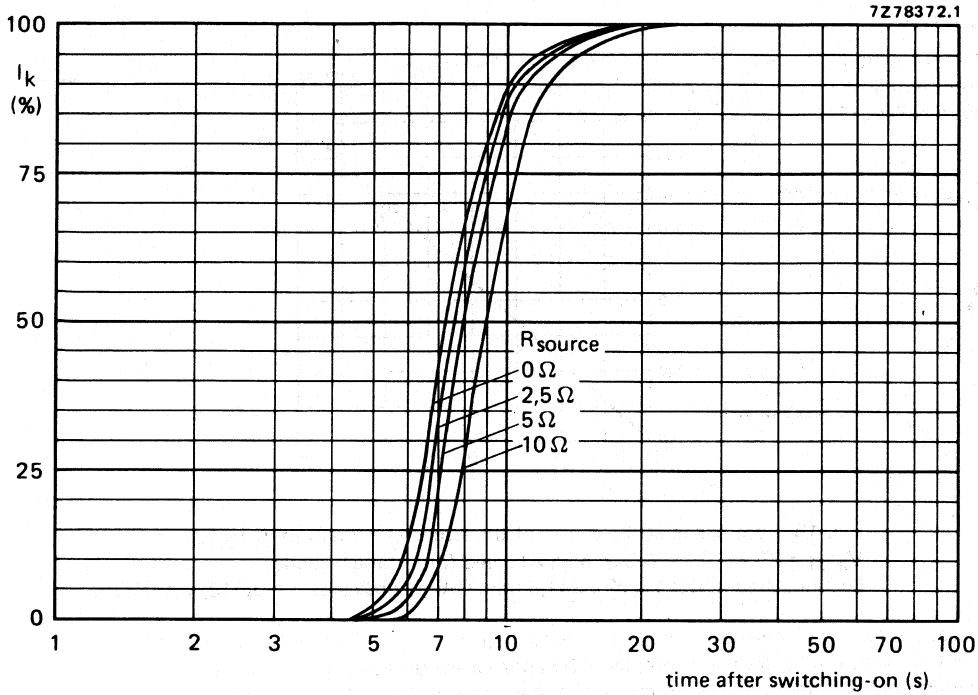

Fig. 17 Cathode heating time after switching on, measured under typical operating conditions.

DEGAUSSING

The picture tube is provided with an internal magnetic shield. This shield and the shadow mask with its suspension system may be provided with an automatic degaussing system, consisting of one magnetic coil winding mounted on the cone of the picture tube.

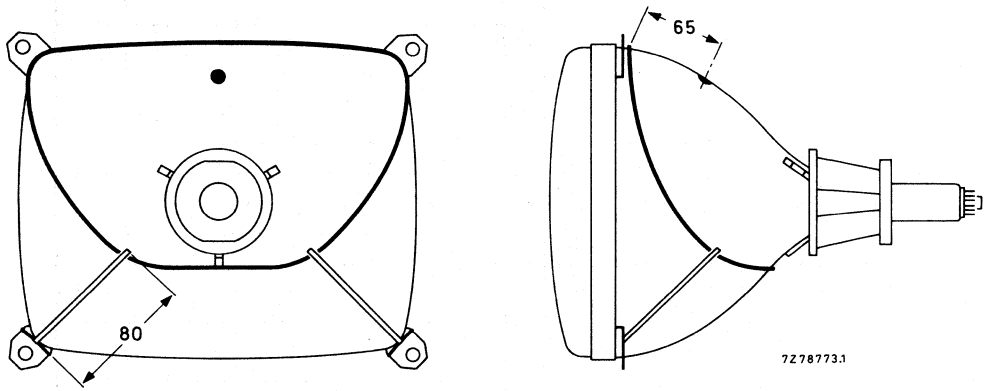

Fig. 18 Position of degaussing coil on the picture tube.

For proper degaussing an initial magnetomotive force (MMF) of 600 ampere-turns is required in the coil. This MMF has to be gradually decreased by appropriate degaussing circuitry. In the steady state, no significant MMF should remain in the coil ($\leqslant$ 0,6 ampere-turns). If single-phase power rectification is employed in the TV circuitry, provision should be included to prevent asymmetric distortion of the AC voltage applied to the degaussing circuit due to high DC inrush currents. An example of a degaussing circuit and coil data for various mains voltages are given below.

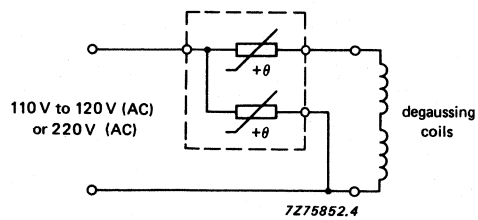

Fig. 19 Degaussing circuit using dual PTC thermistor.

Data of degaussing coil

	110 V (AC) mains	220 V (AC) mains
Circumference	105 cm	105 cm
Number of turns	70	120
Copper-wire diameter	0,5 mm	0,35 mm
Resistance	6,3 Ω	22,3 Ω
Catalogue number of appropriate dual PTC thermistor	8222 298 73091	2322 662 98009

COLOUR PICTURE TUBE ASSEMBLY

- Factory preset tube/coil assembly
- Self-converging and raster correction free
- 42 cm, 90° colour picture tube A42-570X
- Hybrid saddle toroidal deflection unit AT1215/00

QUICK REFERENCE DATA

Deflection angle	90°
Minimum useful screen diagonal	42 cm
Overall length	368 mm
Neck diameter	29.1 mm

MECHANICAL DATA

Dimensions in mm

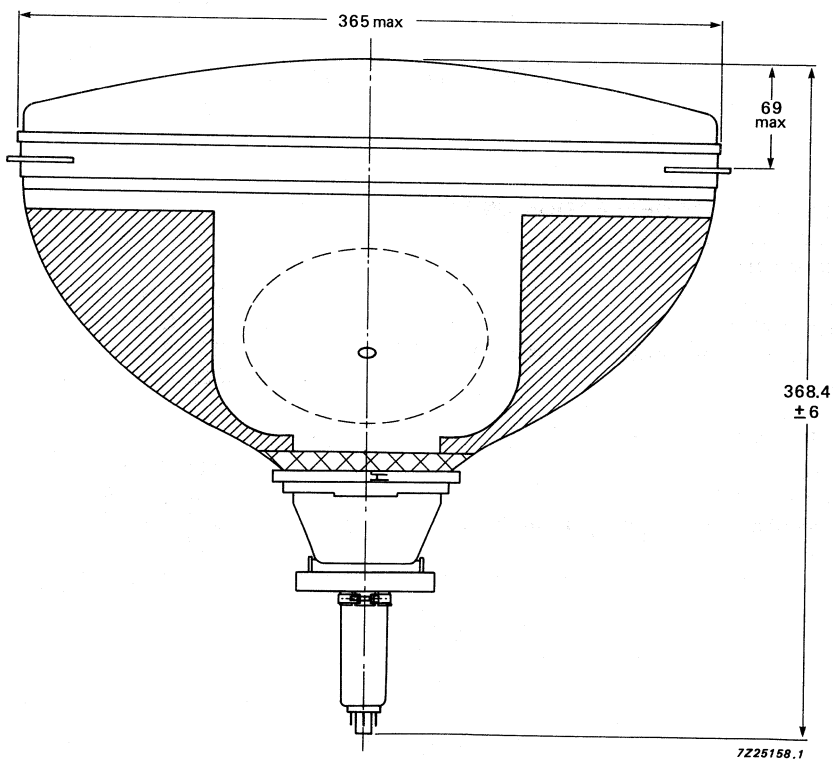

Fig. 1 Colour picture tube assembly A42-570X1500.

MECHANICAL DATA

Dimensions in mm

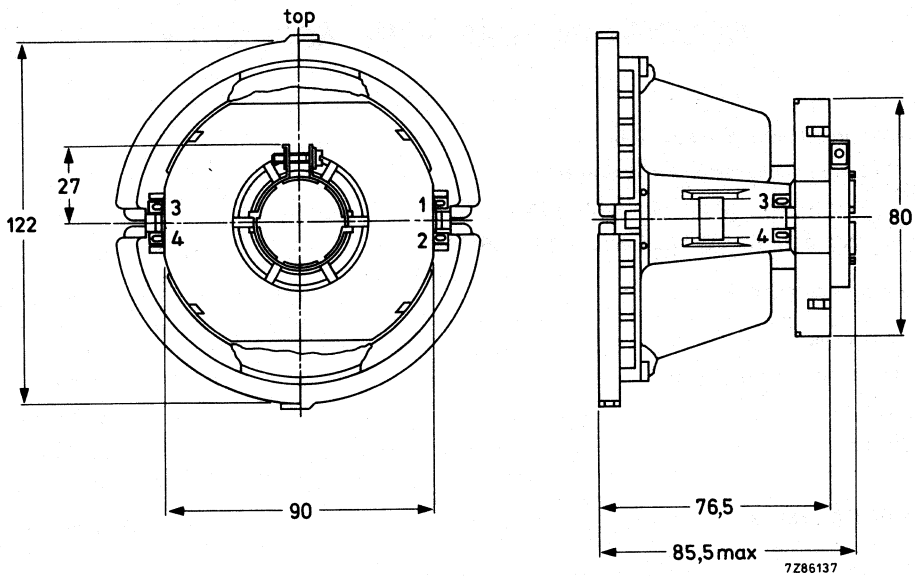

Fig. 2 Deflection unit AT1215/00.

ELECTRICAL DATA OF DEFLECTION UNIT

Line deflection coils	
Inductance	2.30 mH ± 5%
Resistance at 25 °C	2.25 Ω ± 10%
Line deflection current, raster scan, at 25 kV	2.75 A(p-p)
Raster scan	322 mm
Field deflection coils	
Inductance	23 mH ± 10%
Resistance at 25 °C	12.2 Ω ± 7%
Field deflection current, raster scan, at 25 kV	0.87 A(p-p)
Raster scan	242 mm

Cross-talk	a voltage of 10 V, 15750 Hz applied to the line coils causes no more than 0.20 V across the field coils (damping resistors included)
Insulation resistance at 1 kV DC	
between line and field coils	> 500 MΩ
between line coil and core clamp	> 500 MΩ
between field coil and core clamp	> 10 MΩ
Maximum operating temperature (average copper temperature)	+90 °C
Storage temperature range	−25 to +90 °C
Flame retardent	according to UL 413, category 94V-1

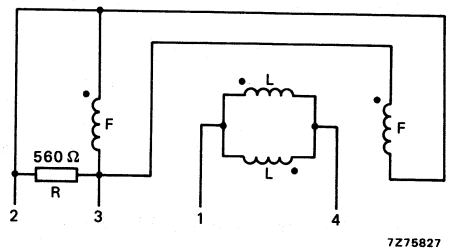

Fig. 3 Connection diagram. L = line coils; F = field coils.

The beginning of the windings is indicated with ●.

ENVIRONMENTAL TEST SPECIFICATIONS OF DEFLECTION UNITS

Vibration	IEC 68-2-6 (test Fc)
Shock	IEC 68-2-27 (test Ea)
Bump	IEC 68-2-29 (test Eb, 25g)
Cold	IEC 68-2-1 (test Ab)
Dry heat	IEC 68-2-2 (test Bb)
Damp heat, steady state	IEC 68-2-3 (test Ca)
Cyclic damp heat	IEC 68-2-30 (test Db)
Change of temperature	IEC 68-2-14 (test Nb)

Replaces A42-590X

Hi-Bri COLOUR PICTURE TUBE

- 90° deflection
- In-line gun, thermally stable; electrostatic hi-bi-potential focus
- 29,1 mm neck diameter
- Hi-Bri screen with pigmented phosphor featuring high brightness and increased contrast performance
- Soft-Flash technology offering improved set reliability
- Slotted shadow mask optimized for minimum moiré
- Fine pitch over entire screen
- Phosphor lines follow glass contour
- Quick-heating cathodes
- Internal magnetic shield
- Reinforced envelope for push-through mounting
- Anti-crackle coating
- When combined with an appropriate hybrid saddle toroidal deflection unit (e.g. AT1216 or AT1470), it forms a self-converging and raster correction free assembly.

QUICK REFERENCE DATA

Deflection angle	90°
Face diagonal	42 cm
Overall length	374 mm
Neck diameter	29,1 mm
Heating	6,3 V, 685 mA
Anode voltage	25 kV
Focusing voltage	28% of anode voltage

ELECTRON-OPTICAL DATA

Electron gun system		unitized triple-aperture electrodes
Focusing method		electrostatic
Focus lens		hi-bi-potential
Deflection method		magnetic
Deflection angles		
diagonal		approx. 90°
horizontal		approx. 78°
vertical		approx. 60°

ELECTRICAL DATA

Capacitances		
anode to external conductive coating including rimband	$C_{a(m+m')}$	> 1000 pF
grid 1 to all other electrodes	C_{g1}	17 pF
cathode of each gun to all other electrodes	C_{kR}, C_{kG}, C_{kB}	5 pF
focusing electrode to all other electrodes	C_{g3}	6 pF
Heating		indirect by AC or DC
heater voltage	V_f	6,3 V
heater current	I_f	685 mA

OPTICAL DATA

Screen	metal-backed vertical phosphor stripes; phosphor lines follow glass contour
Screen finish	satinized
Useful screen dimensions	
diagonal	min. 382,3 mm
horizontal axis	min. 322,1 mm
vertical axis	min. 241,6 mm
area	min. 755 cm^2
Phosphors	
red	pigmented europium activated rare earth sulphide type
green	pigmented sulphide type
blue	
Centre-to-centre distance of vertical identical colour phosphor stripes, at screen centre	0,70 mm
Light transmission of face glass at centre	66,8%

MECHANICAL DATA (see Figs 1 to 9)

Overall length	373,6 ± 5 mm
Neck diameter	$29{,}1\ ^{+1{,}4}_{-0{,}7}$ mm *
Bulb dimensions	
diagonal	max. 418,8 mm
width	max. 360,6 mm
height	max. 281,8 mm
Base	10-pin base JEDEC B10-277
Anode contact	small cavity contact J1-21, IEC 67-III-2
Mounting position	anode contact on top
Net mass	approx. 8 kg

Handling

During shipment and handling the tube should not be subjected to accelerations greater than 350 m/s^2 in any direction.

* In the region of 70 mm from the neck end, the maximum diameter is 30 mm.

MECHANICAL DATA (continued)

Dimensions in mm

Notes are given after the drawings.

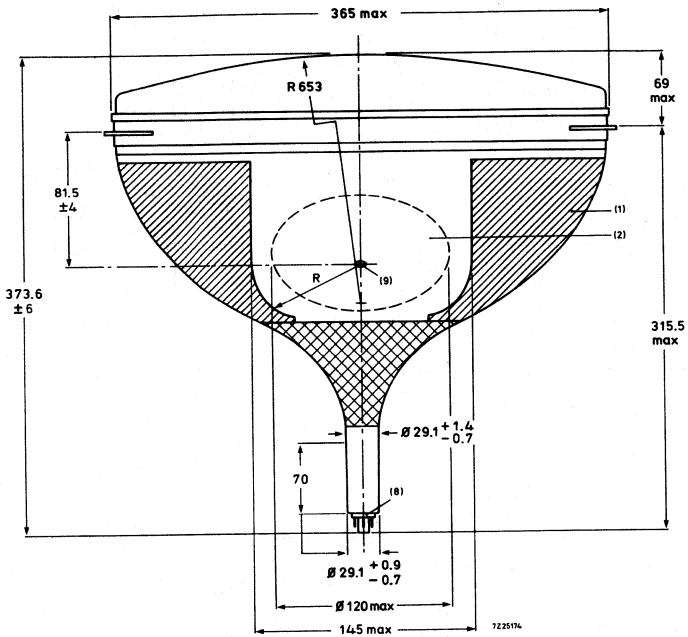

Fig. 1.

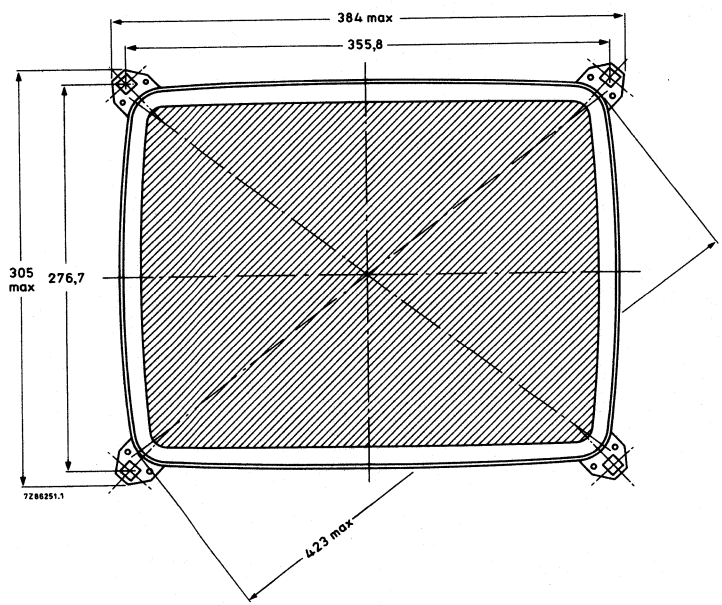

Fig. 2.

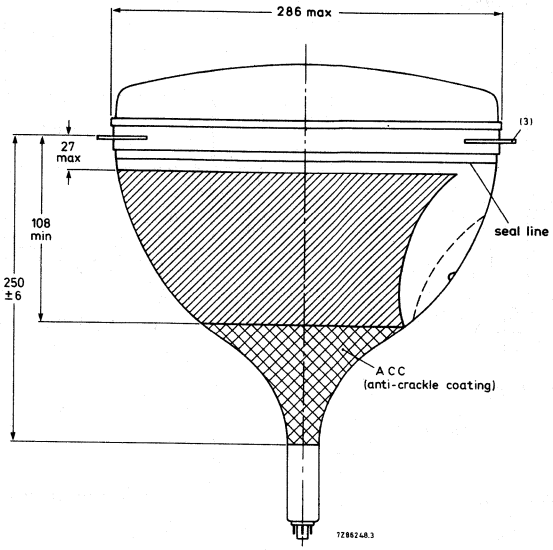
286 max
(3)
27
max
108
min
250
±6
seal line
A C C
(anti-crackle coating)
7Z86248.3

Fig. 3.

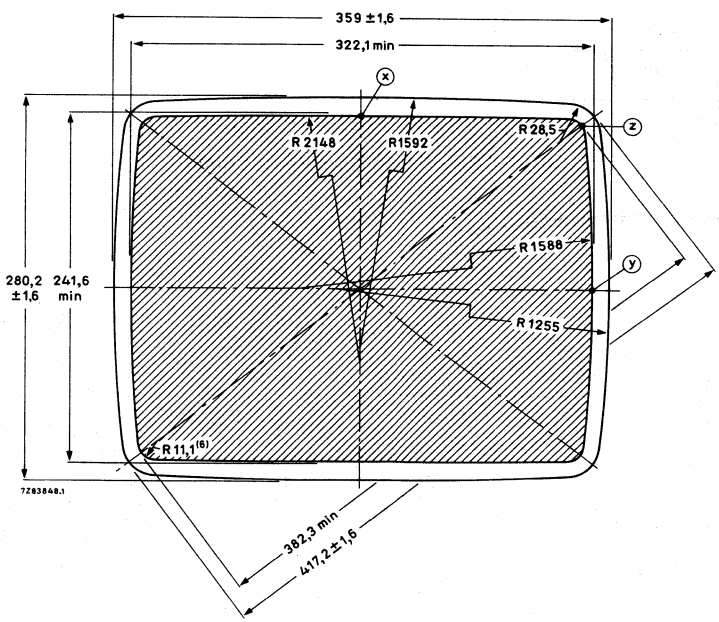
359 ±1,6
322,1 min
x
R 2148
R1592
R 28,5
z
R1588
y
280,2
±1,6
241,6
min
R 1255
R 11,1 (6)
7Z83848.1
382,3 min
417,2 ±1,6

Fig. 4.

MECHANICAL DATA (continued)

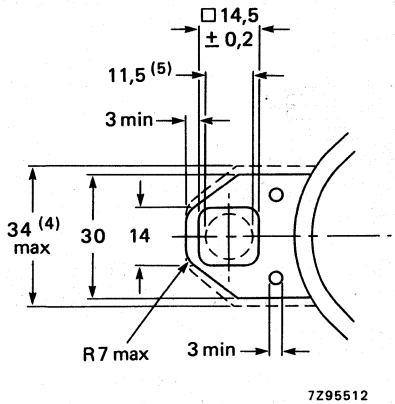

Fig. 5 Lug dimensions.

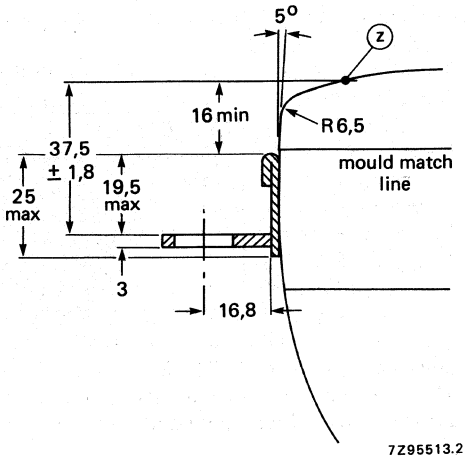

Fig. 6 Lug position.

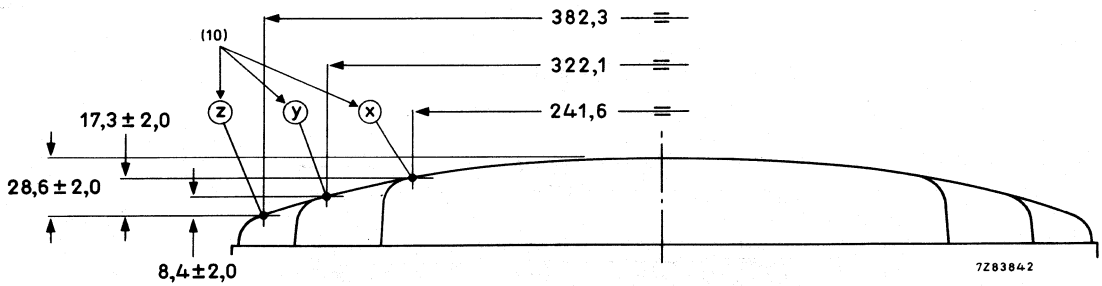

Fig. 7 Screen reference points.

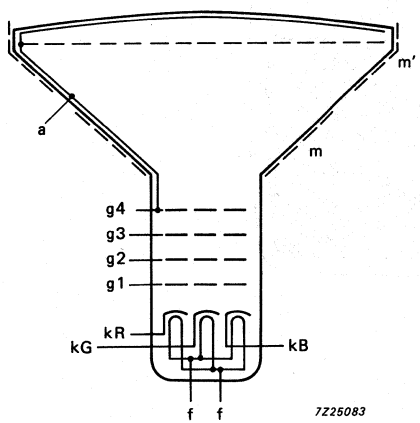

Fig. 8 Electrode configuration.

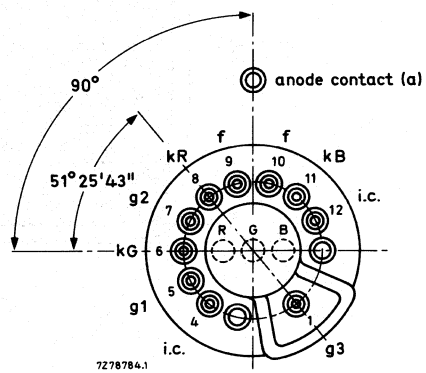

i.c. = internally connected
(not to be used)

Fig. 9 Pin arrangement.

Notes to outline drawings

1. Configuration of outer conductive coating may be different, but will contain the contact area as shown in the drawing.
2. To clean this area, wipe only with a soft lintless cloth.
3. One of the four mounting lugs may deviate (1,5 mm max.) from the plane of the other three lugs. This deviation is incorporated in the tolerance of ± 1,8 mm.
4. Minimum space to be reserved for mounting lug.
5. The position of the mounting screw in the cabinet must be within a circle of 11,5 mm diameter drawn around the true geometrical positions, i.e. the corners of a rectangle of 355,8 mm x 276,7 mm.
6. Co-ordinates for radius R = 11,1 mm: x = 146,52 mm, y = 104,72 mm.
7. Not applicable.
8. The socket for this base should not be rigidly mounted; it should have flexible leads and be allowed to move freely. After mounting of the tube in the cabinet note that the position of the base can fall within a circle, having a diameter of max. 50 mm, concentric with an imaginary tube axis.
9. Small cavity contact J1-21, IEC67-III-2.
10. The X, Y and Z reference points are located on the outside surface of the face plate at the intersection of the minor, major and diagonal screen axis respectively, with the minimum published screen.

Reference line gauge; GR90CJ4

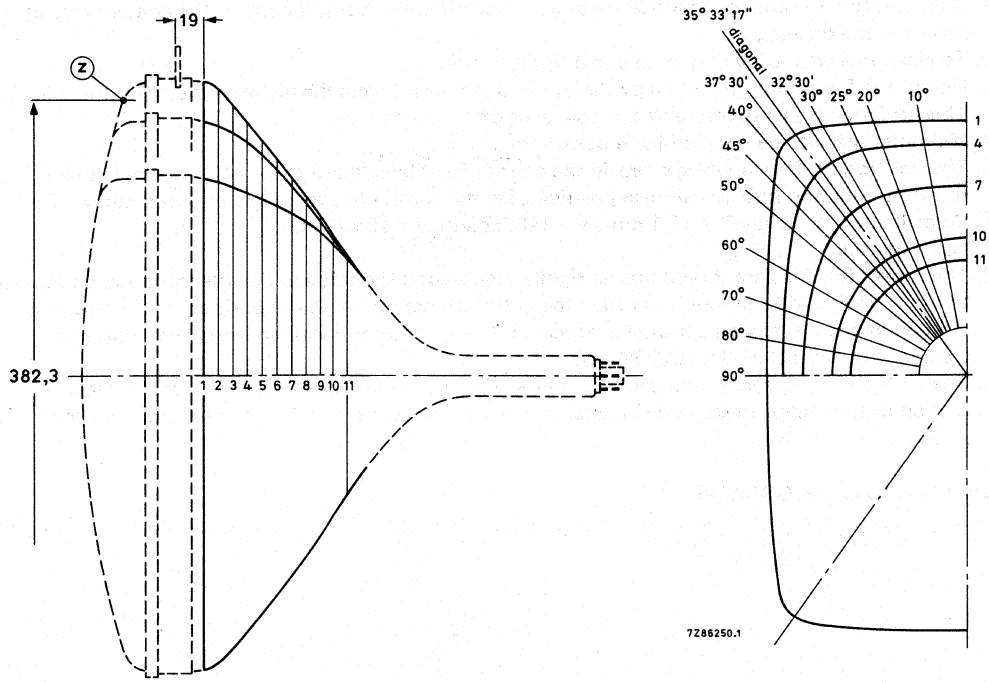

Fig. 10 Cone contour.

Table 1 Cone contour data

Dimensions in mm

section	nom. distance from section 1	distance from centre (max. values)														
		0°	10°	20°	25°	30°	32° 30'	diag. axes	37° 30'	40°	45°	50°	60°	70°	80°	90°
1	0	179,1	181,5	189,1	195,0	202,1	205,7	208,5	207,8	203,3	189,6	177,2	159,0	147,6	141,3	139,3
2	10	176,1	178,4	185,4	190,7	196,9	199,9	201,9	200,9	196,4	183,9	172,5	155,4	144,4	138,4	136,5
3	20	170,8	172,8	178,7	182,9	187,5	189,3	190,0	188,9	185,4	175,4	165,5	150,0	139,9	134,2	132,4
4	30	164,1	165,8	170,8	174,1	177,2	178,2	177,9	176,7	173,9	166,0	157,8	144,2	135,1	129,9	128,2
5	40	155,6	157,1	161,4	164,0	166,1	166,4	165,6	164,3	161,9	155,7	149,1	137,9	130,0	125,4	123,9
6	50	145,1	146,5	150,1	152,2	153,6	153,6	152,8	151,7	149,9	145,1	140,1	131,1	124,5	120,6	119,3
7	60	133,6	134,7	137,4	138,9	139,9	140,0	139,5	138,9	137,8	134,6	130,9	123,8	118,6	115,4	114,3
8	70	121,8	122,6	124,4	125,3	125,9	125,9	125,8	125,6	125,1	123,5	121,3	116,4	112,2	109,6	108,7
9	80	109,5	110,0	110,9	111,3	111,6	111,6	111,6	111,6	111,5	110,9	110,1	107,6	105,0	103,1	102,4
10	90	96,5	96,6	96,8	96,9	97,0	97,1	97,1	97,2	97,2	97,1	97,0	96,3	95,4	94,5	94,1
11	100	82,2	82,1	82,1	82,1	82,2	82,2	82,2	82,2	82,2	82,2	82,2	82,2	82,2	82,2	82,1

10-pin base; JEDEC B10-277

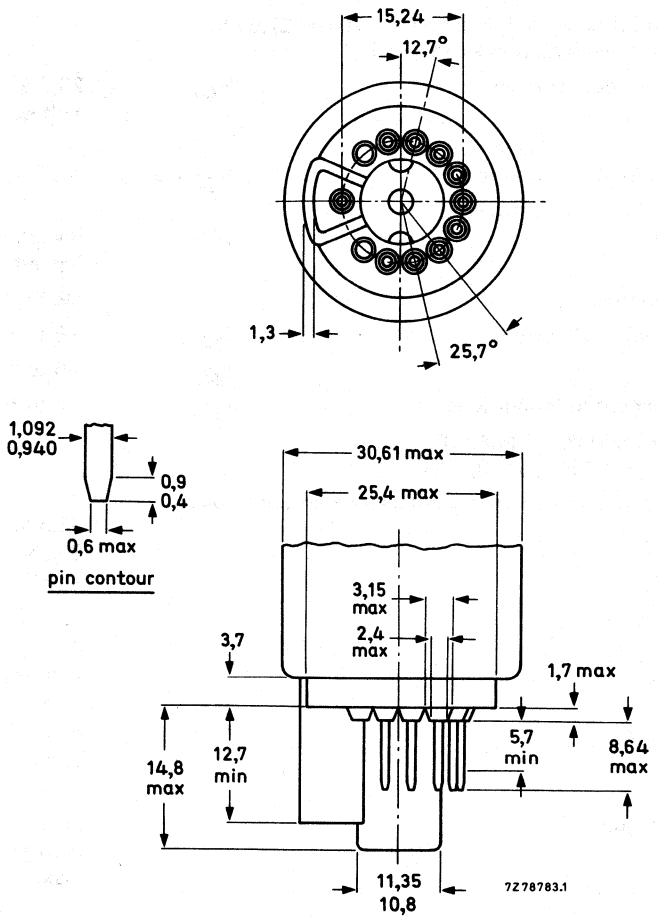

Fig. 11 JEDEC base.

TYPICAL OPERATING CONDITIONS

The voltages are specified with respect to grid 1.

Anode voltage	$V_{a,g4}$	25 kV
Grid 3 (focusing electrode) voltage	V_{g3}	6,6 to 7,5 kV
Grid 2 voltage for a spot cut-off voltage V_k = 140 V	V_{g2}	390 to 760 V
Luminance at the centre of the screen*	L	130 cd/m² ←

* Tube settings adjusted to produce white of 6500K + 7 M.P.C.D. (x = 0,313, Y = 0,329) focused raster, current density 0,4 μA/cm².

EQUIPMENT DESIGN VALUES

The values are valid for anode voltages between 20 and 27,5 kV.
The voltages are specified with respect to grid 1.

Grid 3 (focusing electrode) voltage	V_{g3}	26,6 to 29,8% of anode voltage
Grid 2 voltage and cathode voltage for visual extinction of focused spot	V_{g2} and V_k	see Fig. 13*
Difference in cut-off voltages between guns in any tube	ΔV_k	lowest value > 80% of highest value
Video drive characteristics		see Fig. 14**
Grid 3 (focusing electrode) current	I_{g3}	−5 to + 5 μA
Grid 2 current	I_{g2}	−5 to + 5 μA
Grid 1 current under cut-off conditions	I_{g1}	−5 to + 5 μA
To produce white of 6500K + 7 M.P.C.D. (CIE co-ordinates x = 0,313, y = 0,329)		
Percentage of the total anode current supplied by each gun (typical)		
red gun		38,3%
green gun		35,8%
blue gun		25,9%
Ratio of anode currents		
red gun to green gun		min. 0,8
		average 1,1
		max. 1,4
red gun to blue gun		min. 1,1
		average 1,5
		max. 1,9
blue gun to green gun		min. 0,5
		average 0,7
		max. 0,9

* The common V_{g2} should be adjusted as follows:
Set the cathode voltage, V_k, for each gun at 150 V. Increase the V_{g2} from about 400 V to the value at which the raster of one of the guns becomes just visible. Now decrease the V_k of the remaining guns so that the rasters of these guns also become visible.

** For optimum picture performance it is recommended that the cathodes are not driven below + 10 V.

LIMITING VALUES (Design maximum rating system unless otherwise stated)

The voltages are specified with respect to grid 1.

Anode voltage	$V_{a,g4}$	max.	27,5	kV	notes 1, 2, 3
		min.	20	kV	notes 1 and 4
Long-term average current for three guns	I_a	max.	750	μA	note 5
Grid 3 (focusing electrode) voltage	V_{g3}	max.	11	kV	
Grid 2 voltage, peak	V_{g2p}	max.	1000	V	
Cathode voltage					
positive	V_k	max.	400	V	
positive operating cut-off	V_k	max.	200	V	
negative	$-V_k$	max.	0	V	
negative peak	$-V_{kp}$	max.	2	V	
Heater voltage	V_f	6,3 V	+ 5 −10	% %	notes 1 and 6
Heater-cathode voltage					
heater negative with respect to cathode					
during equipment warm-up period not exceeding 15 s	V_{kf}	max.	450	V	note 1
after equipment warm-up period	V_{kf}	max.	250	V	
heater positive with respect to cathode	$-V_{kfp}$	peak	200	V	note 1
	$-V_{kf}$	max. (DC component value)	0	V	

Notes to the limiting values

1. Absolute maximum rating system.
2. The picture tube does not emit X-radiation above 1 μSv/h when operated within its absolute maximum ratings. ←
3. During adjustment on the production line this value is likely to be surpassed considerably. It is therefore strongly recommended to first make the necessary adjustments for normal operation without picture tube.
4. Operation of the tube at lower voltages impairs the luminance and resolution.
5. The short-term average anode current should be limited by circuitry to 1000 μA.
6. For maximum cathode life and optimum performance, it is recommended that the heater supply be designed for 6,3 V at zero beam current.

FLASHOVER PROTECTION

With the high voltage used with this tube (max. 27,5 kV) internal flashovers may occur. As a result of the Soft-Flash technology these flashover currents are limited to approx. 60 A offering higher set reliability, optimum circuit protection and component savings.
Primary protective circuitry using properly grounded spark gaps and series isolation resistors (preferably carbon composition) is still necessary to prevent tube damage. The spark gaps should be connected to all picture tube electrodes at the socket according to the figure below; they are not required on the heater pins. No other connections between the outer conductive coating and the chassis are permissible.
The spark gaps should be designed for a breakdown voltage at the focusing electrode (g3) of 11 kV ($1,5 \times V_{g3}$ max. at $V_{a,g4}$ = 25 kV), and at the other electrodes of 1,5 to 2 kV.
The values of the series isolation resistors should be as high as possible (min. 1,5 kΩ) without causing deterioration of the circuit performance. The resistors should be able to withstand an instantaneous surge of 20 kV for the focusing circuit and 12 kV for the remaining circuits without arcing.
Additional information is available on request.

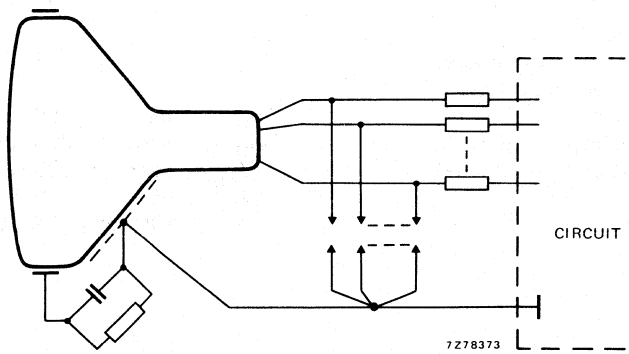

Fig. 12 Flashover protection circuit.

BEAM CORRECTIONS

Maximum required correction for register, as measured at the centre of the screen in any direction	0,08 mm
Centre convergence displacement of the blue and red beams is contained within a circle; max. diameter of circle	4,5 mm
Centre convergence displacement between the green beam and converged blue and red beams is contained within a circle; maximum diameter of circle	2,3 mm
Maximum centring error in any direction after colour purity, static convergence, and horizontal centre line correction, measured with deflection coils in nominal position	5 mm

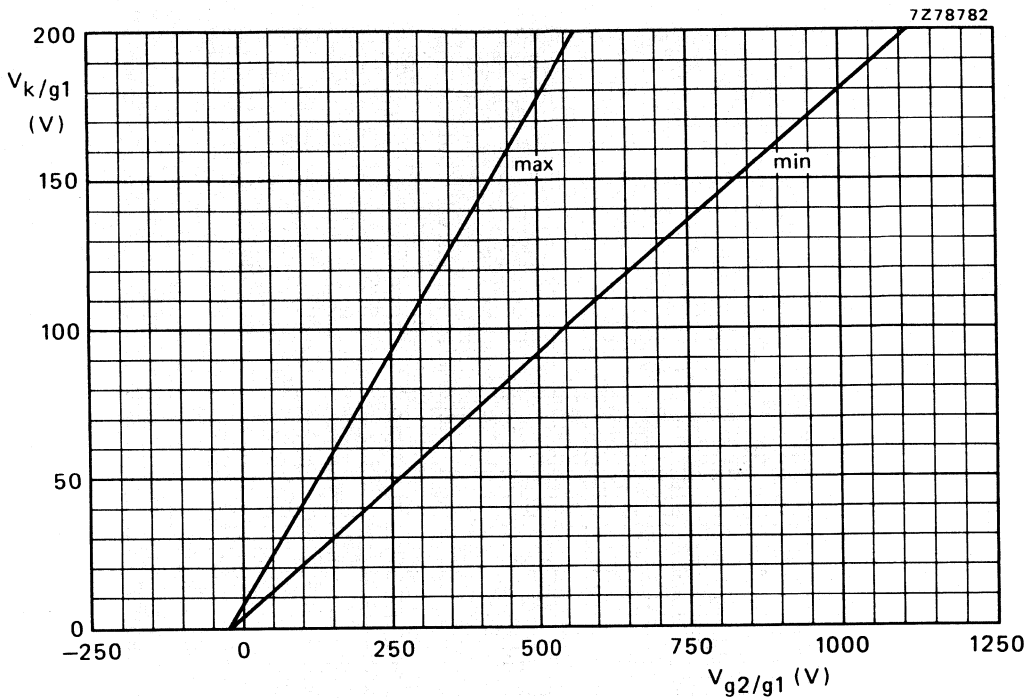

Fig. 13 Spot cut-off design chart (cathode drive), V_{g3} adjusted for focus, $V_{a,g4}$ = 20 to 27,5 kV.

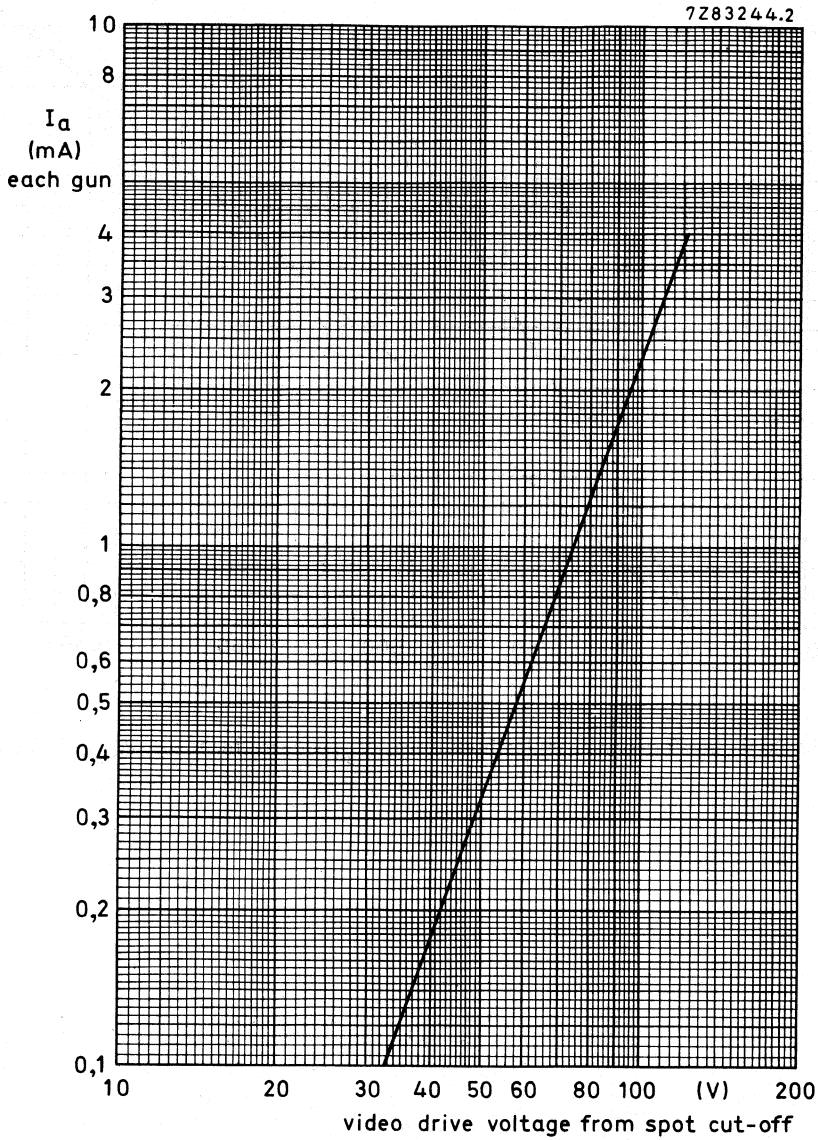

Fig. 14 Typical cathode drive characteristics.

V_f = 6,3 V;
$V_{a,g4}$ = 25 kV;
V_{g3} adjusted for focus;
V_{g2} adjusted to provide spot cut-off for V_k = 140 V.

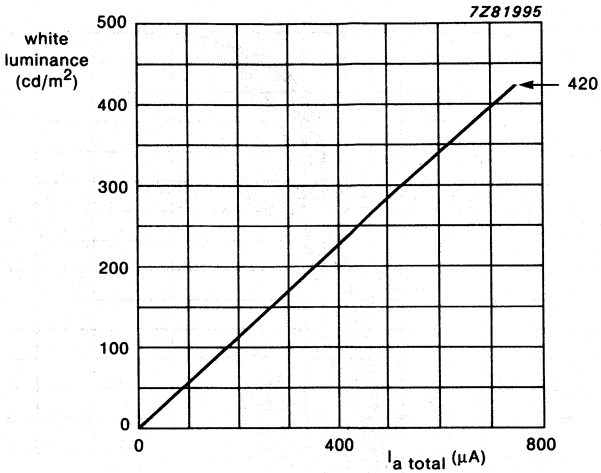

Fig. 15 Luminance at the centre of the screen as a function of I_{total}.
$V_{a,g4}$ = 25 kV, V_f = 6,3 V, V_{g3} adjusted for optimum focus.
Scanned area = 322,1 mm x 241,6 mm; CIE co-ordinates x = 0,313, y = 0,329.

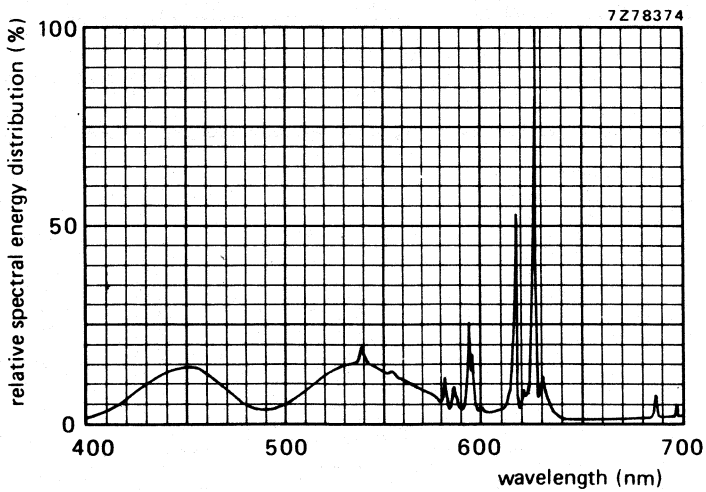

Fig. 16 Simultaneous excitation of red, green and blue phosphor, measured in a tube, to produce white of x = 0,313, y = 0,329. Exact shape of the peaks depends on the resolution of the measuring apparatus.

Colour co-ordinates:	x	y
red	0,635	0,340
green	0,315	0,600
blue	0,150	0,060

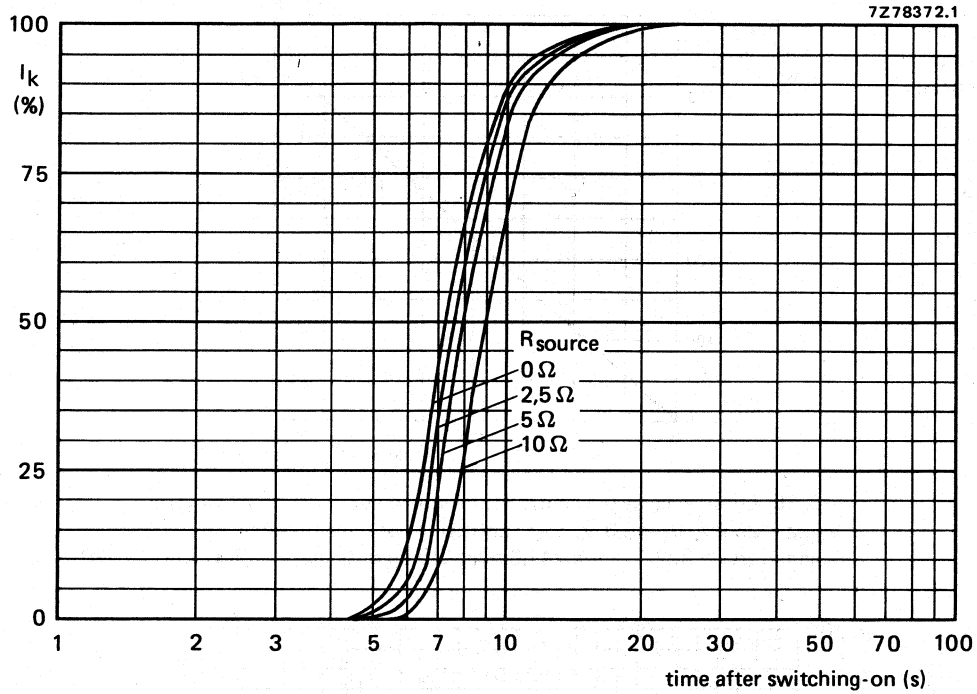

Fig. 17 Cathode heating time after switching on, measured under typical operating conditions.

DEGAUSSING

The picture tube is provided with an internal magnetic shield. This shield and the shadow mask with its suspension system may be provided with an automatic degaussing system, consisting of one magnetic coil winding mounted on the cone of the picture tube.

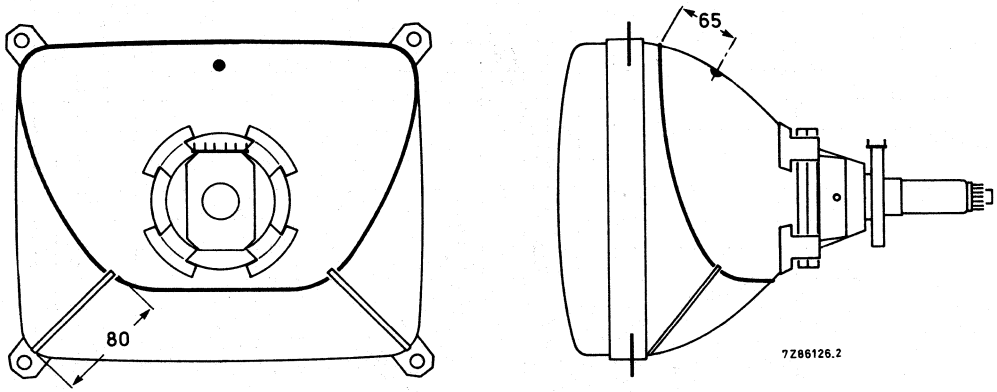

Fig. 18 Position of degaussing coil on the picture tube.

For proper degaussing an initial magnetomotive force (MMF) of 600 ampere-turns is required in the coil. This MMF has to be gradually decreased by appropriate degaussing circuitry. In the steady state, no significant MMF should remain in the coil ($\leqslant$ 0,6 ampere-turns). If single-phase power rectification is employed in the TV circuitry, provision should be included to prevent asymmetric distortion of the AC voltage applied to the degaussing circuit due to high DC inrush currents. An example of a degaussing circuit and coil data for various mains voltages are given below.

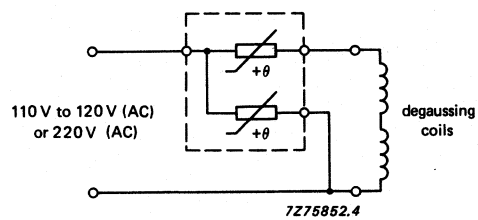

Fig. 19 Degaussing circuit using dual PTC thermistor.

Data of degaussing coil

	110 V (AC) mains	220 V (AC) mains
Circumference	105 cm	105 cm
Number of turns	70	120
Copper-wire diameter	0,5 mm	0,35 mm
Resistance	6,3 Ω	22,3 Ω
Catalogue number of appropriate dual PTC thermistor	8222 298 73091	2322 662 98009

COLOUR PICTURE TUBE ASSEMBLY

- Factory preset tube/coil assembly
- Self-converging and raster correction free
- 42 cm, 90° colour picture tube A42-592X
- Hybrid saddle toroidal deflection unit AT1216/20

QUICK REFERENCE DATA

Deflection angle	90°
Minimum useful screen diagonal	42 cm
Overall length	374 mm
Neck diameter	29.1 mm

MECHANICAL DATA

Dimensions in mm

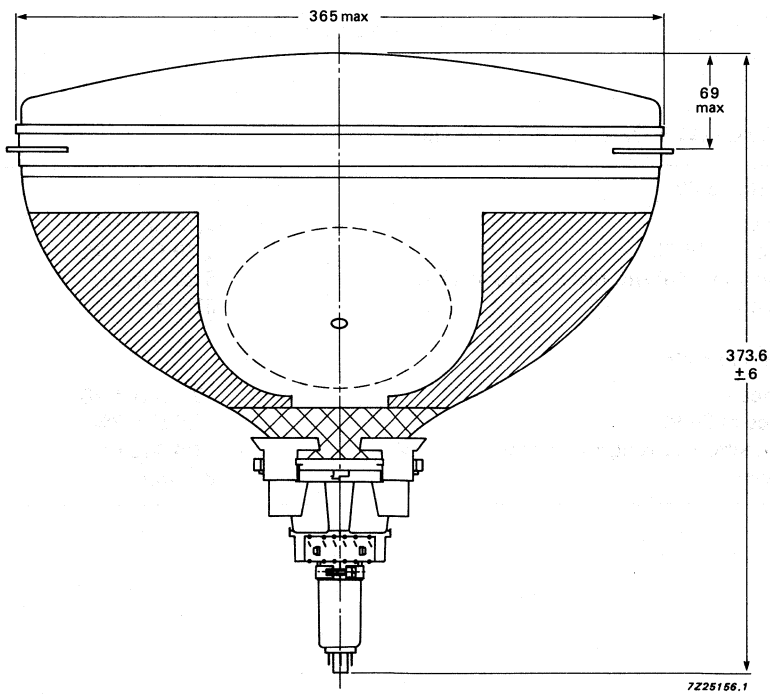

Fig. 1 Colour picture tube assembly A42-592X1620.

MECHANICAL DATA

Dimensions in mm

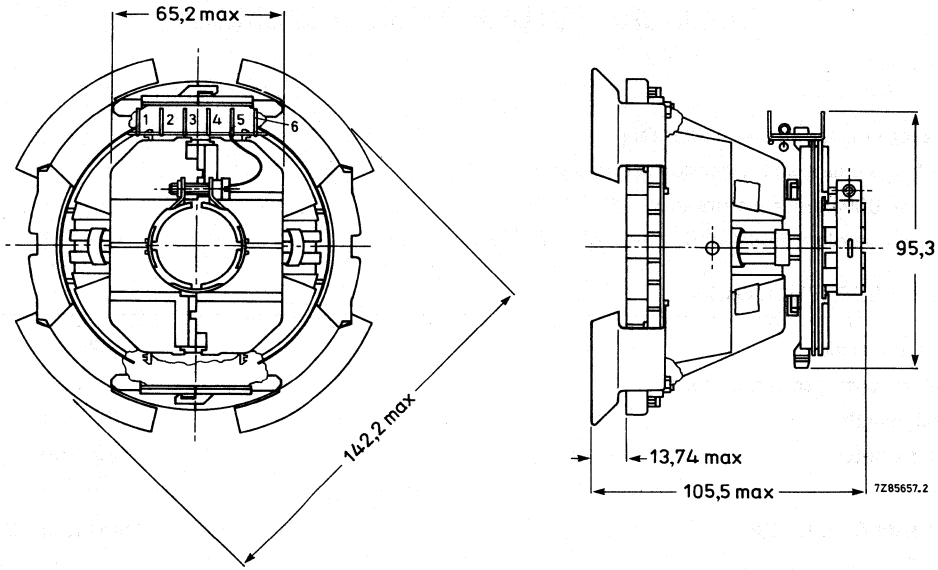

Fig. 2 Deflection unit AT1216/20.

ELECTRICAL DATA OF DEFLECTION UNIT

Line deflection coils	
Inductance	1.73 mH ± 5%
Resistance at 25 °C	1.79 Ω ± 10%
Line deflection current, raster scan, at 25 kV	3.28 A(p-p)
Raster scan	322 mm
Field deflection coils	
Inductance	29.1 mH ± 10%
Resistance at 25 °C	11.0 Ω ± 7%
Field deflection current, raster scan, at 25 kV	0.94 A(p-p)
Raster scan	242 mm

Cross-talk	a voltage of 10 V, 15625 Hz applied to the line coils causes no more than 0.20 V across the field coils (damping resistors included)
Insulation resistance at 1 kV DC	
between line and field coils	> 500 MΩ
between line coil and core clamp	> 500 MΩ
between field coil and core clamp	> 10 MΩ
Maximum operating temperature (average copper temperature)	+90 °C
Storage temperature range	−25 to +90 °C
Flame retardent	according to UL 413, category 94V-1

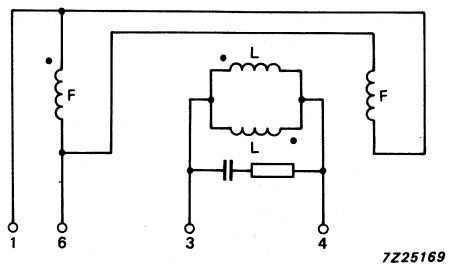

Fig. 3 Connection diagram. L = line coils; F = field coils.

The beginning of the windings is indicated with ●.

ENVIRONMENTAL TEST SPECIFICATIONS OF DEFLECTION UNITS

Vibration	IEC 68-2-6 (test Fc)
Shock	IEC 68-2-27 (test Ea)
Bump	IEC 68-2-29 (test Eb; 25g)
Cold	IEC 68-2-1 (test Ab)
Dry heat	IEC 68-2-2 (test Bb)
Damp heat, steady state	IEC 68-2-3 (test Ca)
Cyclic damp heat	IEC 68-2-30 (test Db)
Change of temperature	IEC 68-2-14 (test Nb)

Hi-Bri COLOUR PICTURE TUBE

- 90° deflection
- In-line, thermally stable hi-bi potential gun
- 22,5 mm neck diameter
- Hi-Bri technology
- Pigmented phosphors
- Slotted shadow mask optimized for minimum moiré
- Fine pitch over entire screen
- Phosphor lines follow glass contour
- Quick heating low-power cathodes
- Soft-Flash technology
- Internal magnetic shield
- Reinforced envelope for push-through mounting
- Combined with a deflection unit of the AT1645 series, it forms a self-converging and raster correction free assembly

QUICK REFERENCE DATA

Deflection angle	90°
Minimum useful screen diagonal	48 cm
Overall-length	427 mm
Neck diameter	22,5 mm
Heating	6,3 V, 310 mA
Anode voltage	25 kV
Focusing voltage	31% of anode voltage

ELECTRON-OPTICAL DATA

Electron gun system		unitized triple-aperture electrodes
Focusing method		electrostatic
Focus lens		hi-bi-potential
Deflection method		magnetic
Deflection angles		
diagonal		approx. 90°
horizontal		approx. 78°
vertical		approx. 60°

ELECTRICAL DATA

Capacitances		
anode to external conductive coating including rimband	$C_{a(m+m')}$	min. 1500 pF
grid 1 to all other electrodes	C_{g1}	15 pF
cathode of each gun to all other electrodes	C_{kR}, C_{kG}, C_{kB}	4 pF
focusing electrode to all other electrodes	C_{g3}	4 pF
Heating		indirect by AC or DC
heater voltage	V_f	6,3 V
→ heater current	I_f	310 mA

OPTICAL DATA

Screen	metal-backed vertical phosphor stripes; phosphor lines follow glass contour
Screen finish	satinized
Useful screen dimensions	
diagonal	min. 480,0 mm
horizontal axis	min. 404,4 mm
vertical axis	min. 303,3 mm
area	min. 1190 cm^2
Phosphors	
red	pigmented europium activated rare earth
green	sulphide type
blue	pigmented sulphide type
Centre-to-centre distance of vertical identical colour phosphor stripes, at screen centre	0,80 mm
Light transmission of face glass at centre	64%

MECHANICAL DATA (see also the figures on the following pages)

Overall length	426,6 ± 5 mm
Neck diameter	$22{,}5\ ^{+1{,}4}_{-0{,}7}$ mm*
Bulb dimensions	
diagonal	max. 515,1 mm
width	max. 442,1 mm
height	max. 343,4 mm
Base	JEDEC B8-288
Anode contact	small cavity contact J1-21, IEC 67-III-2
Mounting position	anode contact on top
Net mass	approx. 13 kg

Handling

During shipment and handling the tube should not be subjected to accelerations greater than 35g in any direction.

* In the region of 66 mm from the neck end, the maximum diameter is 23,2 mm.

MECHANICAL DATA (continued)

Notes are given after the drawings

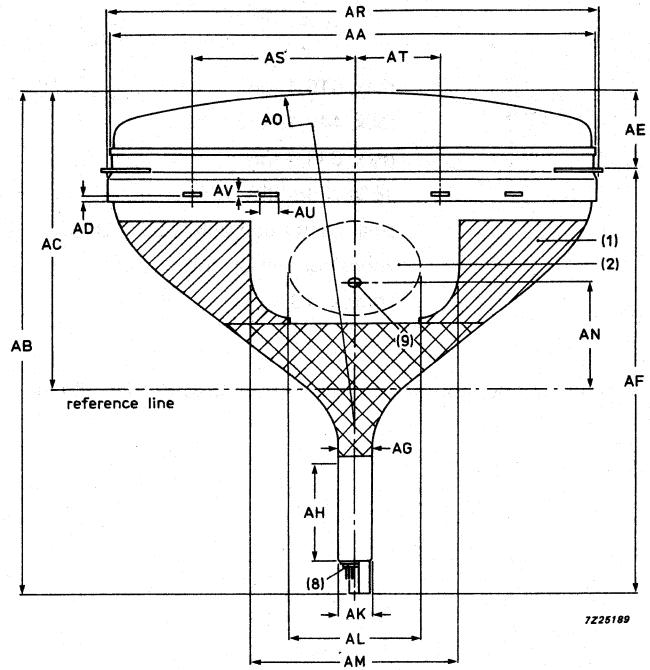

Fig. 1

Dimensions in mm

AA	446 max
AB	431,6 max
AC	288,8 ± 4
AD	4 ± 1
AE	79 max
AF	355,5 max
AG	$22{,}5\ ^{+1{,}4}_{-0{,}7}$
AH	66
AK	22,5 ± 0,7
AL	110 ± 10
AM	140
AN	102 ± 3,2
AO	approx. 805
AR	455 max
AS	150 ± 5
AT	80 ± 5
AU	14,5 min
AV	4,8 min

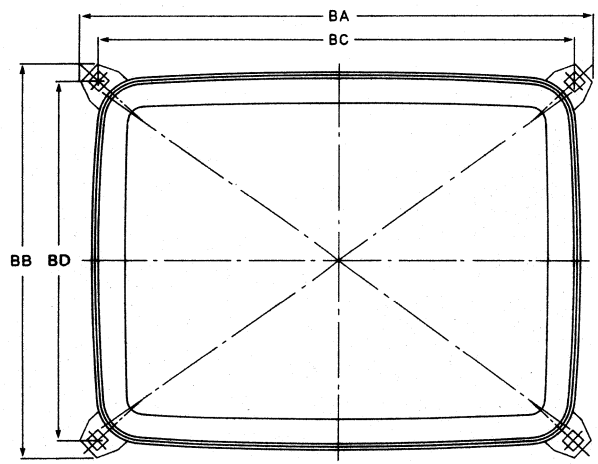

Fig. 2

Dimensions in mm

BA	463 max
BB	364 max
BC	434
BD	337

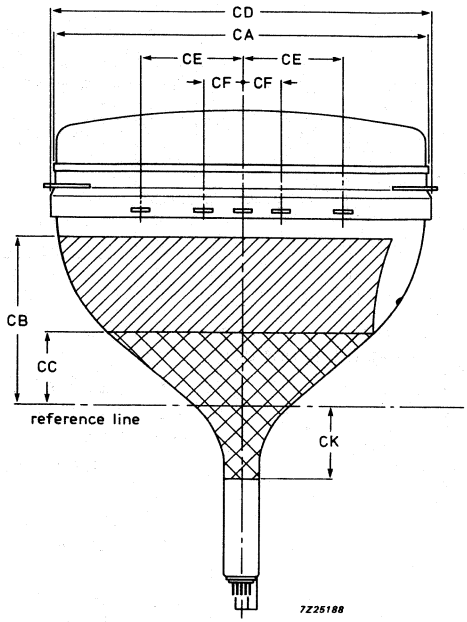

Fig. 3

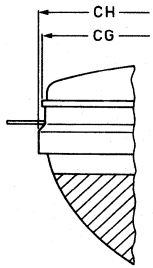

Dimensions in mm

CA	347 max
CB	176 min
CC	56 max
CD	356 max
CE	95 ± 5
CF	35 ± 5
CG	521 max
CH	528 max
CK	53 max

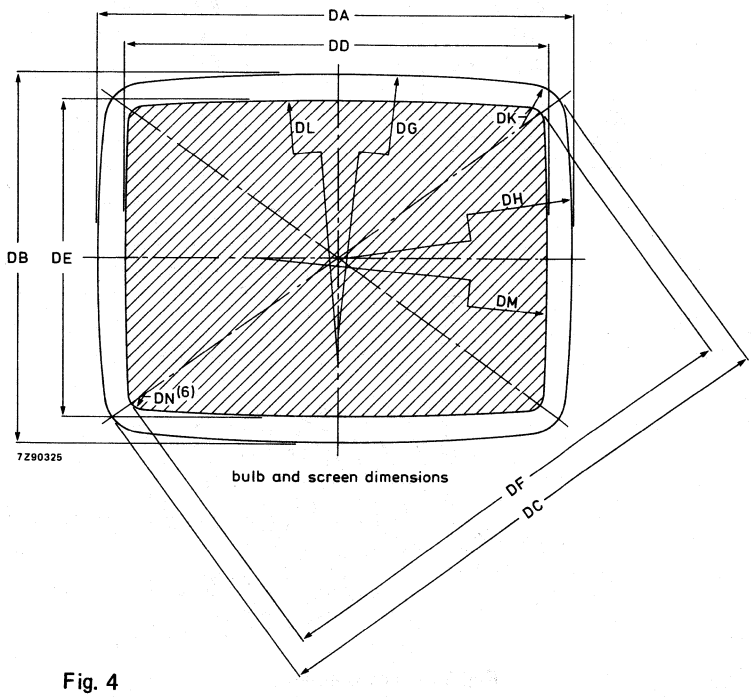

Fig. 4

Dimensions in mm

DA	440,5 ± 1,6
DB	341,8 ± 1,6
DC	513,5 ± 1,6
DD	404,4 min
DE	303,3 min
DF	480,0 min
DG	R1905
DH	R1532
DK	R29,85
DL	R2597
DM	R1948
DN	R13,1

MECHANICAL DATA (continued)

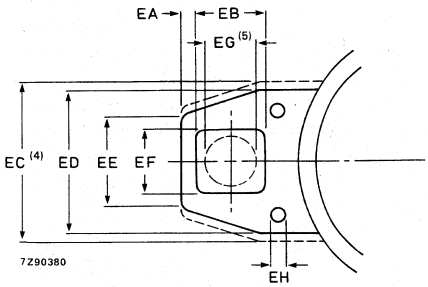

Fig. 5 Lug dimensions.

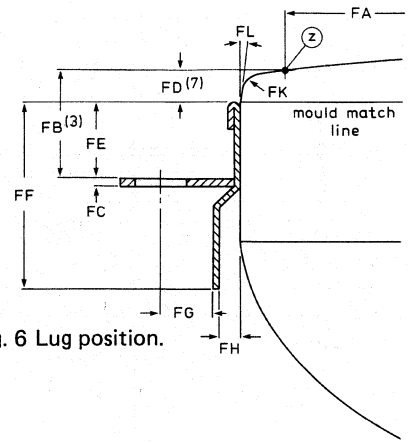

Fig. 6 Lug position.

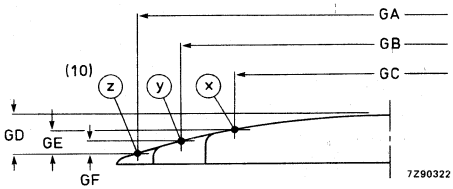

Fig. 7 Screen reference points.

Dimensions in mm

EA	2,5 ± 0,5
EB	13 ± 0,3
EC	40 max
ED	35
EE	12
EF	12 ± 0,3
EG	8
EH	3,0 min

Dimensions in mm

GA	480
GB	404,4
GC	303,3
GD	36,6 ± 2,0
GE	22,2 ± 2,0
GF	10,8 ± 2,0

Dimensions in mm

FA	480
FB	38,5 ± 2,5
FC	2 max
FD	12 min
FE	24 max
FF	55 max
FG	13,4
FH	2 min
FK	R6
FL	5°

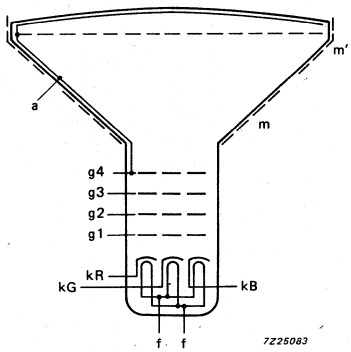

Fig. 8 Electrode configuration.

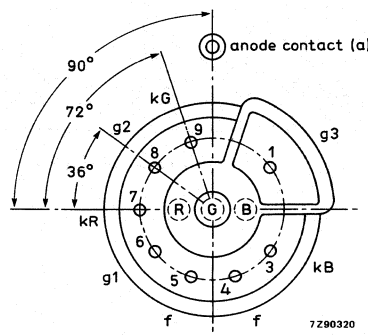

Fig. 9 Pin arrangement.

Notes to outline drawings

1. Configuration of outer conductive coating may be different, but will contain the contact areas as shown in the drawing.
2. To clean this area, wipe only with a soft lintless cloth.
3. One of the four mounting lugs may deviate (2 mm max.) from the plane of the other three lugs. This deviation is incorporated in the tolerance of ± 2,5 mm.
4. Minimum space to be reserved for mounting lug.
5. The position of the mounting screw in the cabinet must be within a circle of 8 mm diameter drawn around the true geometrical positions, i.e. the corners of a rectangle of 434 mm x 337 mm.
6. Co-ordinates for radius R = 13,1 mm; x = 184,58 mm, y = 131,93 mm.
7. Distance from point Z to any hardware.
8. The socket for this base should not be rigidly mounted; it should have flexible leads and be allowed to move freely. After mounting of the tube in the cabinet note that the position of the base can fall within a circle, having a diameter of max. 50 mm, concentric with an imaginary tube axis.
9. Small cavity contact J1-21, IEC 67-III-2.
10. The X, Y and Z reference points are located on the outside surface of the face plate at the intersection of the minor, major and diagonal screen axis respectively, with the minimum published screen.

Reference line gauge; G-R90CJ10

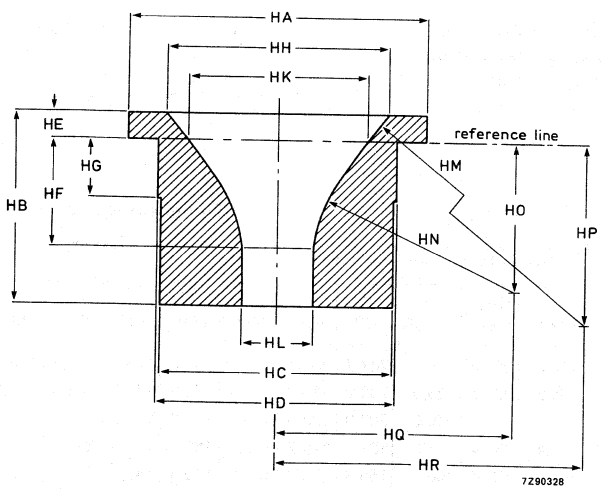

Fig. 10 Reference line guage.

Dimensions in mm

HA	ϕ 100,00
HB	65,00
HC	ϕ 78,70
HD	ϕ 80,00
HE	9,20 ± 0,02
HF	36,22 ± 0,02
HG	20,00
HH	ϕ 75,48 ± 0,02
HK	ϕ 60,77 ± 0,02
HL	ϕ 23,90 $^{+0,04}_{-0}$
HM	R220,00
HN	R70,00
HO	50,30
HP	132,71
HQ	80,52
HR	205,85

Maximum cone contour

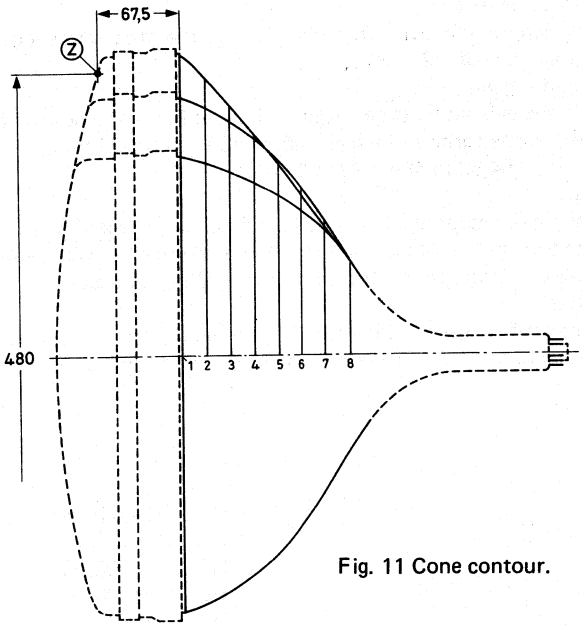

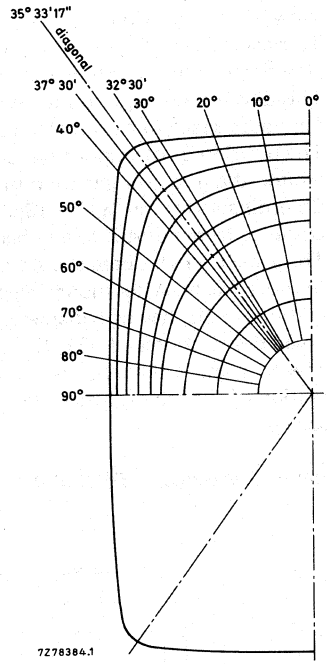

Fig. 11 Cone contour.

Table 1 Cone contour data

Dimensions in mm

section	nom. distance from section 1	distance from centre (max. values)														
		0°	10°	20°	25°	30°	32° 30'	diag. axes	37° 30'	40°	45°	50°	60°	70°	80°	90°
1	0	218,7	221,9	231,2	238,5	247,5	252,2	255,9	254,6	247,7	230,1	215,1	193,0	179,2	171,5	169,0
2	20	209,8	212,4	220,3	226,0	232,5	235,3	236,5	235,0	230,2	216,9	204,4	184,9	172,3	165,3	163,0
3	40	197,5	199,4	204,7	208,1	211,1	211,9	211,4	210,0	207,0	198,6	189,5	173,9	163,2	157,1	155,1
4	60	182,2	183,2	185,8	187,1	187,7	187,4	186,4	185,3	183,3	178,2	172,1	160,7	152,4	147,4	145,8
5	80	163,2	163,5	163,9	163,7	163,1	162,4	161,4	160,6	159,3	156,3	152,9	145,8	140,1	136,6	135,4
6	100	146,1	146,1	145,7	145,1	144,2	143,6	142,8	142,2	141,4	139,5	137,5	133,3	129,7	127,3	126,5
7	120	112,3	112,3	111,9	111,7	111,3	111,1	110,9	110,7	110,5	110,0	109,5	108,6	107,8	107,3	107,1
8	141,7	79,8	79,8	79,8	79,8	79,8	79,8	79,8	79,8	79,8	79,8	79,8	79,8	79,8	79,8	79,8

Base JEDEC B8-288

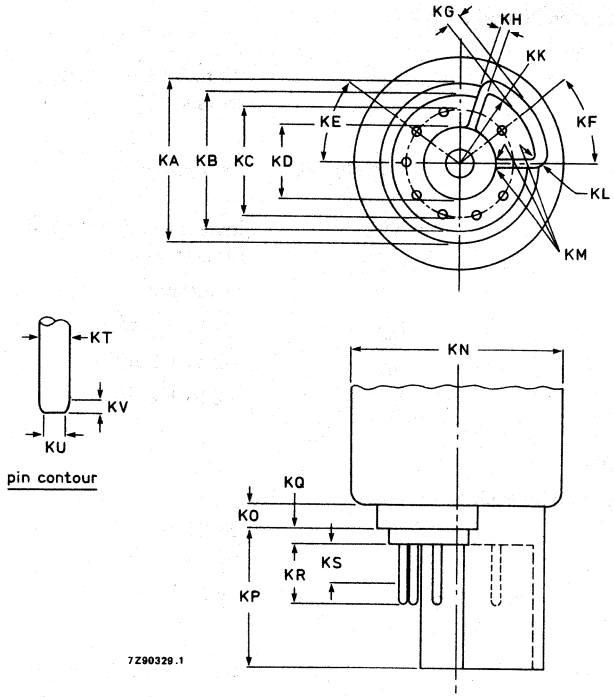

Fig. 12 JEDEC base.

Dimensions in mm

KA	17,9 max
KB	15,4 max
KC	12,0
KD	7,9 min; 8,2
KE	36°
KF	38°
KG	1,3 max
KH	0,8 min; 1,0 max
KK	R8,66 ± 0,1
KL	R1,0
KM	R0,25
KN	23,2 max
KO	1,2 max
KP	13,6 ± 0,2
KQ	1,6 max
KR	6,85 max
KS	4,5 min
KT	1,016 ± 0,076
KU	0,63 max
KV	0,4 min

TYPICAL OPERATING CONDITIONS

The voltages are specified with respect to grid 1.

Anode voltage	$V_{a,g4}$ 25 kV
Grid 3 (focusing electrode) voltage	V_{g3} 7,3 to 8,3 kV
Grid 2 voltage for a spot cut-off voltage V_k = 120 V	V_{g2} 310 to 650 V
Luminance at the centre of the screen*	L 140 cd/m²

* Tube settings adjusted to produce white of 6500K + 7 M.P.C.D. (x = 0,313, y = 0,329) focused raster, current density 0,4 μA/cm².

EQUIPMENT DESIGN VALUES

The values are valid for anode voltages between 20 and 27,5 kV.
The voltages are specified with respect to grid 1.

Grid 3 (focusing electrode) voltage	V_{g3}	29 to 33% of anode voltage
Grid 2 voltage and cathode voltage for visual extinction of focused spot	V_{g2} and V_k	see Fig. 14
Difference in cut-off voltages between guns in any tube	ΔV_k	lowest value > 80% of highest value
Video drive characteristics		see graphs
→ Grid 3 (focusing electrode) current	I_{g3}	−2 to + 2 μA
→ Grid 2 current	I_{g2}	−2 to + 2 μA
→ Grid 1 current under cut-off conditions	I_{g1}	−2 to + 2 μA

To produce white of 6500K + 7 M.P.C.D.
(CIE co-ordinates x = 0,313, y = 0,329)

Percentage of the total anode current supplied by each gun (typical)

red gun	38,3%
green gun	35,8%
blue gun	25,9%

Ratio of anode currents

red gun to green gun	min.	0,8
	average	1,1
	max.	1,4
red gun to blue gun	min.	1,1
	average	1,5
	max.	1,9
blue gun to green gun	min.	0,5
	average	0,7
	max.	0,9

LIMITING VALUES (Design maximum rating system unless otherwise stated)

The voltages are specified with respect to grid 1.

Anode voltage	$V_{a,g4}$	max.	27,5	kV	notes 1, 2, 3
		min.	20	kV	notes 1 and 4
Long-term average current for three guns	I_a	max.	1000	μA	note 5
Grid 3 (focusing electrode) voltage	V_{g3}	max.	11	kV	
Grid 2 voltage, peak	V_{g2p}	max.	1000	V	
Cathode voltage					
positive	V_k	max.	400	V	
positive operating cut-off	V_k	max.	200	V	
negative	$-V_k$	max.	0	V	
negative peak	$-V_{kp}$	max.	2	V	
Heater voltage	V_f		6,3 V $^{+5\ \%}_{-10\ \%}$		notes 1 and 6
Heater-cathode voltage					
heater negative with respect to cathode after equipment warm-up period	V_{kf}	max.	200	V	
heater positive with respect to cathode	$-V_{kfp}$	peak	200	V	note 1
	$-V_{kf}$	max. (DC component value)	0	V	

Notes

1. Absolute maximum rating system.
2. The picture tube does not emit X-radiation above 1 μSv/h when operated within its absolute maximum ratings.
3. During adjustment on the production line this value is likely to be surpassed considerably. It is therefore strongly recommended to first make the necessary adjustments for normal operation without picture tube.
4. Operation of the tube at lower voltages impairs the luminance and resolution.
5. The short-term average anode current should be limited by circuitry to 1500 μA.
6. For maximum cathode life and optimum performance, it is recommended that the heater supply be designed for 6,3 V at zero beam current.

FLASHOVER PROTECTION

With the high voltage used with this tube (max. 27,5 kV) internal flashovers may occur. As a result of the Soft-Flash technology these flashover currents are limited to approx. 60 A offering higher set reliability, optimum circuit protection and component savings.

Primary protective circuitry using properly grounded spark gaps and series isolation resistors (preferably carbon composition) is still necessary to prevent tube damage. The spark gaps should be connected to all picture tube electrodes at the socket according to the figure below; they are not required on the heater pins. No other connections between the outer conductive coating and the chassis are permissible.

→ The spark gaps should be designed for a breakdown voltage at the focusing electrode (g3) of 12,5 kV (1,5 x V_{g3} max. at $V_{a,g4}$ = 25 kV), and at the other electrodes of 1,5 to 2 kV.

The values of the series isolation resistors should be as high as possible (min. 1,5 kΩ) without causing deterioration of the circuit performance. The resistors should be able to withstand an instantaneous surge of 20 kV for the focusing circuit and 12 kV for the remaining circuits without arcing.

Additional information is available on request.

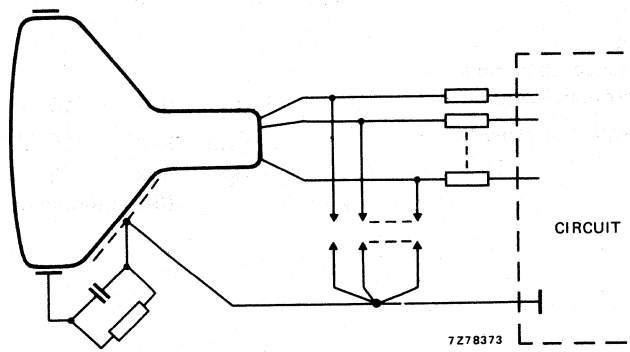

Fig. 13 Flashover protection circuit.

CENTRING ERROR

Maximum centring error in any direction after colour purity, static convergence, and horizontal centre line correction, measured with deflection coils in nominal position	5 mm

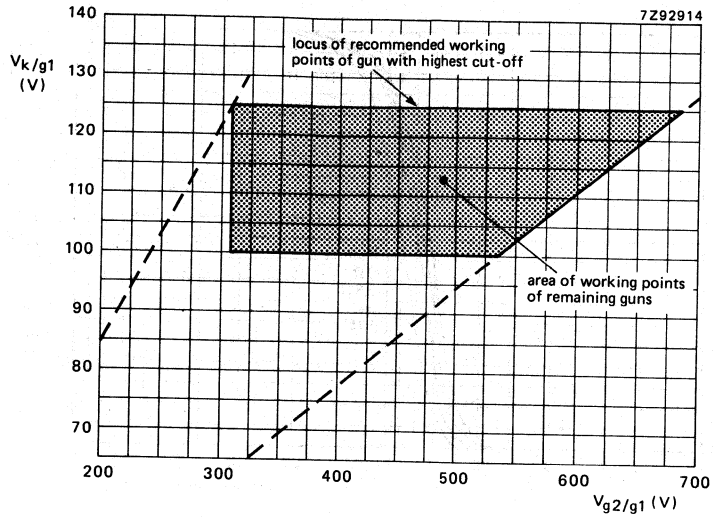

Fig. 14 Spot cut-off design chart.

Grid 2 voltage (V_{g2}) adjusted for highest gun spot cut-off voltage V_k = 125 V.

Remaining guns adjusted for spot cut-off by means of cathode voltage

V_{g2} range 310 to 685 V;

V_k range 100 to 125 V.

Adjustment procedure:

Set the cathode voltage (V_k) for each gun at 125 V; increase the grid 2 voltage (V_{g2}) from approx. 300 V to the value at which one of the colours becomes just visible. Now decrease the cathode voltage of the remaining guns so that the other colours also become visible.

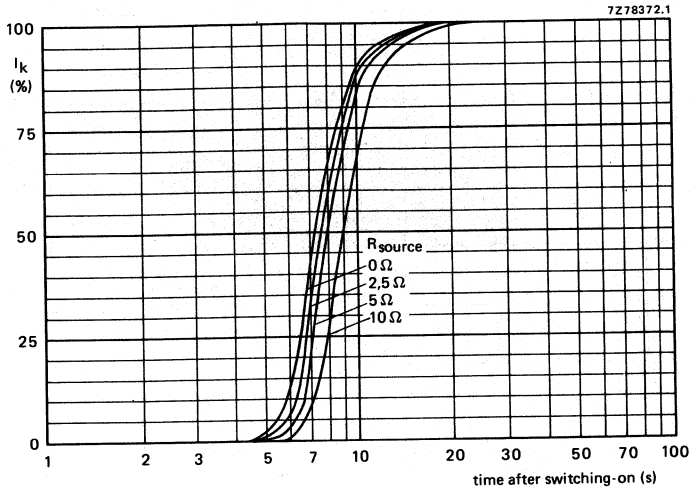

Fig. 15 Cathode heating time after switching on, measured under typical operating conditions.

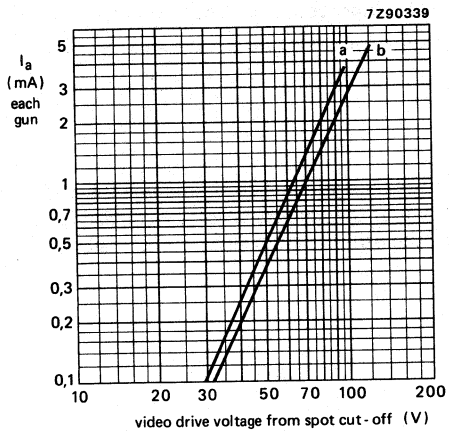

Fig. 16 Typical cathode drive characteristics.

V_f = 6,3 V;

$V_{a,g4}$ = 25 kV;

V_{g3} adjusted for focus;

V_{g2} (each gun) adjusted to provide spot cut-off for V_k = 100 V (curve a), and V_k = 125 V (curve b).

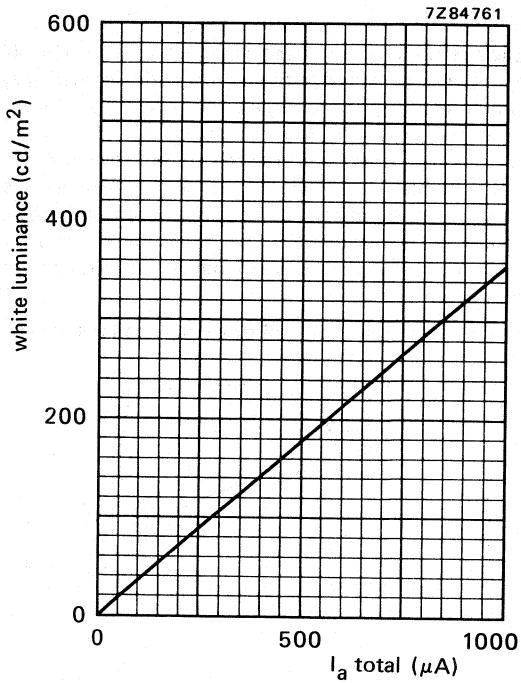

Fig. 17
Luminance at the centre of the screen as a function of I_{total}.
$V_{a,g4}$ = 25 kV.
Scanned area = 404,4 mm x 303,3 mm;
CIE co-ordinates x = 0,313, y = 0,329.

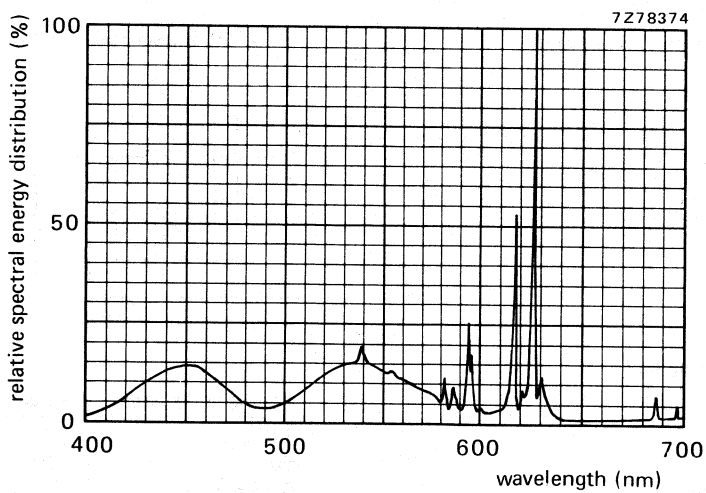

Fig. 18
Simultaneous excitation of red, green and blue phosphor, measured in a tube, to produce white of x = 0,313, y = 0,329. Exact shape of the peaks depends on the resolution of the measuring apparatus.

Colour co-ordinates:	x	y
red	0,635	0,340
green	0,315	0,600
blue	0,150	0,060

DEGAUSSING

The picture tube has an internal magnetic shield. This shield and the shadow mask with its suspension system may be provided with an automatic degaussing system, consisting of two coils covering top and bottom cone parts, or one large coil shaped in the form of a figure eight, with one half on the top and the other half on the bottom cone part.

For proper degaussing an initial magnetomotive force (MMF) of 300 ampere-turns is required in each of the coils. This MMF has to be gradually decreased by appropriate degaussing circuitry. In the steady state, no significant MMF should remain in the coils ($\leqslant$ 0,3 ampere-turns).

If single-phase power rectification is employed in the TV circuitry, provision should be included to prevent asymmetric distortion of the AC voltage applied to the degaussing circuit due to high DC inrush currents.

Examples of a double-coil and of a single-coil system are given below.

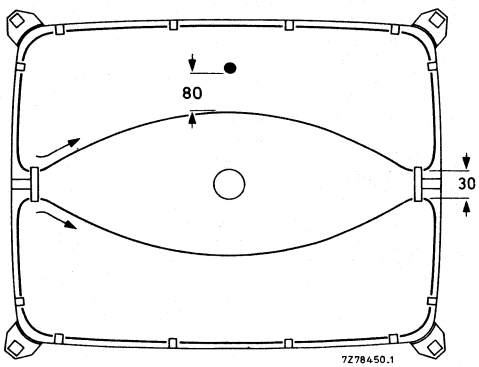

Fig. 19 Double-coil system.

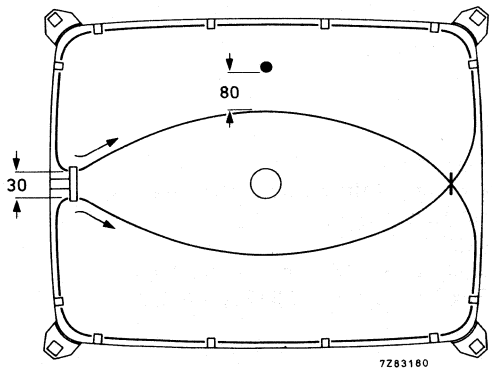

Fig. 20 Single-coil system.

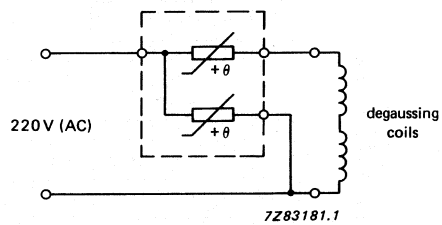

Fig. 21
Degaussing circuit using dual PTC thermistor.

Data of each degaussing coil

	double-coil system	single-coil system
Circumference	117 cm	237 cm
Number of turns	60	60
Copper-wire diameter	0,35 mm	0,35 mm
Resistance (R_C)	13 Ω	26 Ω
Catalogue number of appropriate dual PTC thermistor	2322 662 98009	2322 662 98009

Hi-Bri COLOUR PICTURE TUBE ASSEMBLY

- Factory preset tube/coil assembly
- Self-converging and raster correction free
- 48 cm, 90° colour picture tube A48EAC00X
- Hybrid saddle toroidal deflection unit AT1645/00

QUICK REFERENCE DATA

Deflection angle	90°
Minimum useful screen diagonal	48 cm
Overall length	427 mm
Neck diameter	22.5 mm

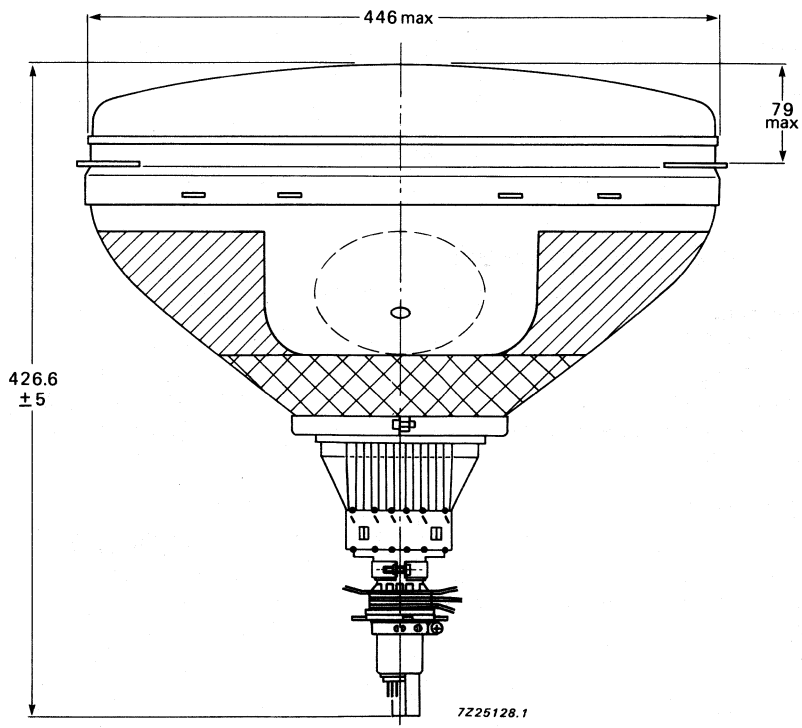

Fig. 1 Colour picture tube assembly A48EAC00X01.

MECHANICAL DATA

Dimensions in mm

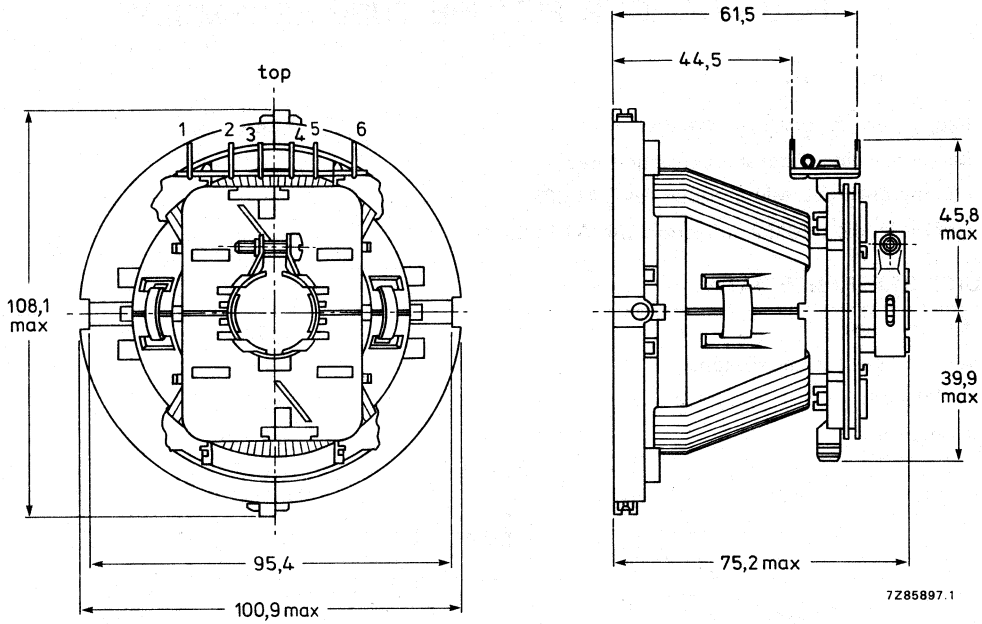

Fig. 2 Deflection unit AT1645/00.

ELECTRICAL DATA OF DEFLECTION UNIT

Line deflection coils

Inductance	2.50 mH ± 4%
Resistance at 25 °C	3.3 Ω ± 10%
Magnetic flux at 25 kV	5.57 mWb ± 2.5%
Line deflection current, raster scan, at 25 kV	2.23 A(p-p)
Raster scan	404 mm

Field deflection coils

Inductance	27.5 mH ± 10%
Resistance at 25 °C	11.8 Ω ± 7%
Field deflection current, raster scan, at 25 kV	0.81 A(p-p)
Raster scan	303 mm

Cross-talk	a voltage of 10 V, 15625 Hz applied to the line coils causes no more than 0.20 V across the field coils (damping resistors included)
Insulation resistance at 1 kV DC	
between line and field coils	> 500 MΩ
between line coil and core clamp	> 500 MΩ
between field coil and core clamp	> 10 MΩ
Maximum operating temperature (average copper temperature)	+90 °C
Storage temperature range	−25 to +90 °C
Flame retardent	according to UL 1413, category 94-V1

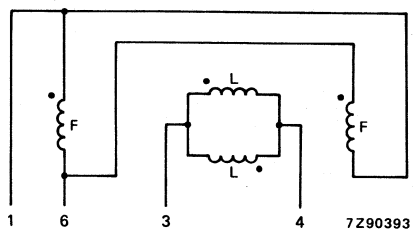

Fig. 3 Connection diagram. L = line coils, F = field coils.

The beginning of the windings is indicated with ●.

ENVIRONMENTAL TEST SPECIFICATIONS OF DEFLECTION UNITS

Vibration	IEC 68-2-6 (test Fc)
Shock	IEC 68-2-27 (test Ea)
Bump	IEC 68-2-29 (test Eb; 25g)
Cold	IEC 68-2-1 (test Ab)
Dry heat	IEC 68-2-2 (test Bb)
Damp heat, steady state	IEC 68-2-3 (test Ca)
Cyclic damp heat	IEC 68-2-30 (test Db)
Change of temperature	IEC 68-2-14 (test Nb)

Hi-Bri COLOUR PICTURE TUBE

- 90° deflection
- In-line gun, electrostatic bi-potential focus
- 29,1 mm neck diameter
- Hi-Bri screen with pigmented phosphors featuring high brightness and increased contrast performance
- Soft-Flash technology offering improved set reliability
- Slotted shadow mask optimized for minimum moire
- Fine pitch over entire screen
- Phosphor lines follow glass contour
- Quick-heating cathodes
- Internal magnetic shield
- Reinforced envelope for push-through mounting
- Anti-crackle coating
- When combined with an appropriate hybrid saddle toroidal deflection unit (e.g. AT1237), it forms a self-converging assembly; dynamic convergence is not required.

QUICK REFERENCE DATA

Deflection angle	90°
Face diagonal	51 cm
Overall length	425 mm
Neck diameter	29,1 mm
Heating	6,3 V, 685 mA
Anode voltage	25 kV
Focusing voltage	20% of anode voltage

ELECTRON-OPTICAL DATA

Electron gun system		unitized triple-aperture electrodes
Focusing method		electrostatic
Focus lens		bi-potential
Deflection method		magnetic
Deflection angles		
diagonal		approx. 90°
horizontal		approx. 78°
vertical		approx. 60°

ELECTRICAL DATA

Capacitances		
anode to external conductive coating including rimband	$C_{a(m+m')}$	> 1500 pF
grid 1 to all other electrodes	C_{g1}	15 pF
cathode of each gun to all other electrodes	C_{kR}, C_{kG}, C_{kB}	5 pF
focusing electrode to all other electrodes	C_{g3}	6 pF
Heating		indirect by AC or DC
heater voltage	V_f	6,3 V
heater current	I_f	685 mA

OPTICAL DATA

Screen	metal-backed vertical phosphor stripes; phosphor lines follow glass contour
Screen finish	satinized
Useful screen dimensions	
diagonal	min. 480,0 mm
horizontal axis	min. 404,4 mm
vertical axis	min. 303,3 mm
area	min. 1190 cm^2
Phosphors	
red	pigmented europium activated rare earth
green	sulphide type
blue	pigmented sulphide type
Centre-to-centre distance of vertical identical colour phosphor stripes, at screen centre	0,8 mm
Light transmission of face glass at centre	64%

MECHANICAL DATA (see Figs 1 to 9)

Overall length	424 ± 5 mm
Neck diameter	$29{,}1\ ^{+\,1{,}4}_{-0{,}7}$ mm *
Bulb dimensions	
diagonal	max. 515,5 mm
width	max. 442,5 mm
height	max. 343,8 mm
Base	12-pin base JEDEC B12-262
Anode contact	small cavity contact J1-21, IEC 67-III-2
Mounting position	anode contact on top
Net mass	approx. 13 kg

Handling

During shipment and handling the tube should not be subjected to accelerations greater than 350 m/s^2 in any direction.

* In the region of 70 mm from the neck end, the maximum diameter is 30 mm.

MECHANICAL DATA (continued)

Dimensions in mm

Notes are given after the drawings.

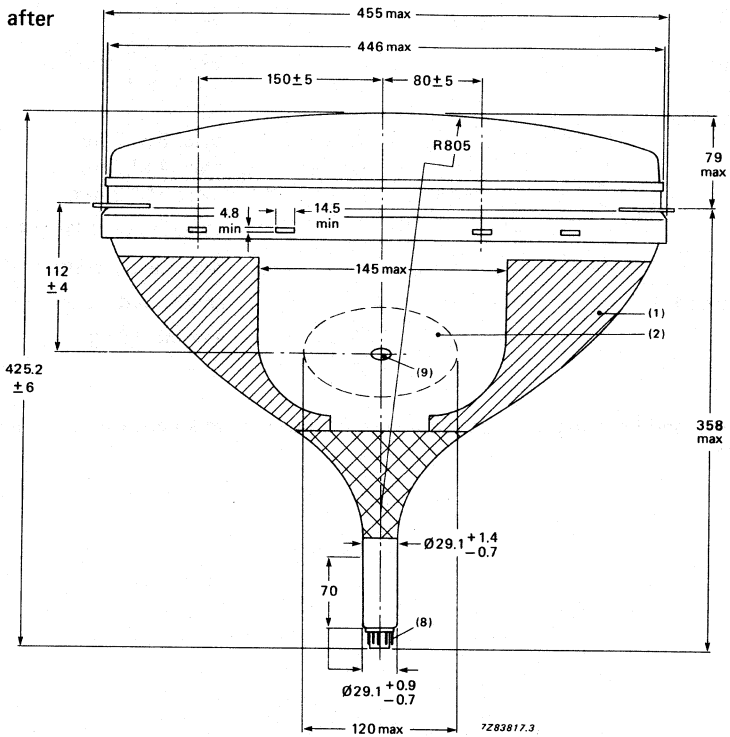

Fig. 1.

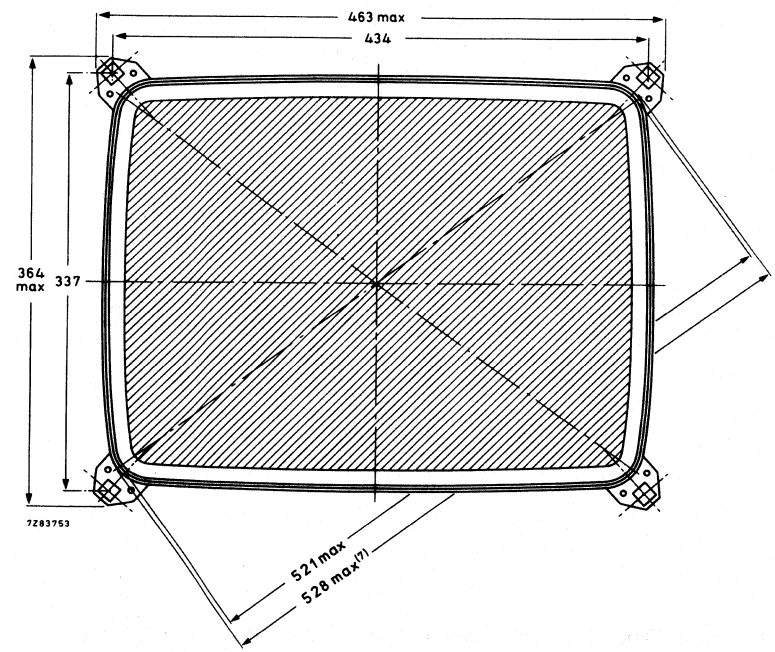

Fig. 2.

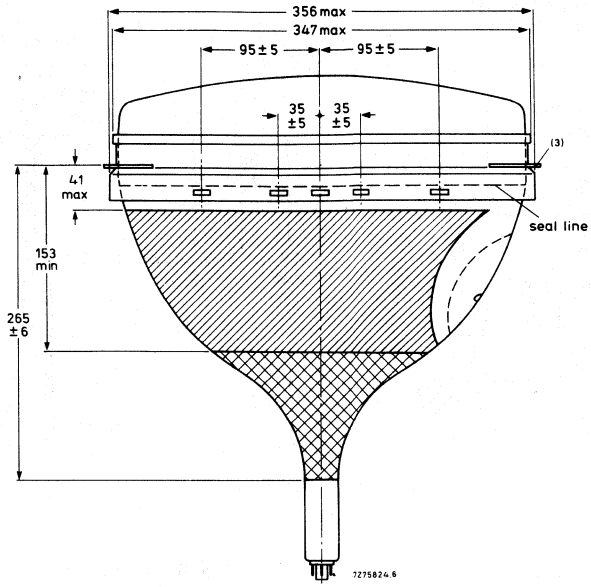

Fig. 3.

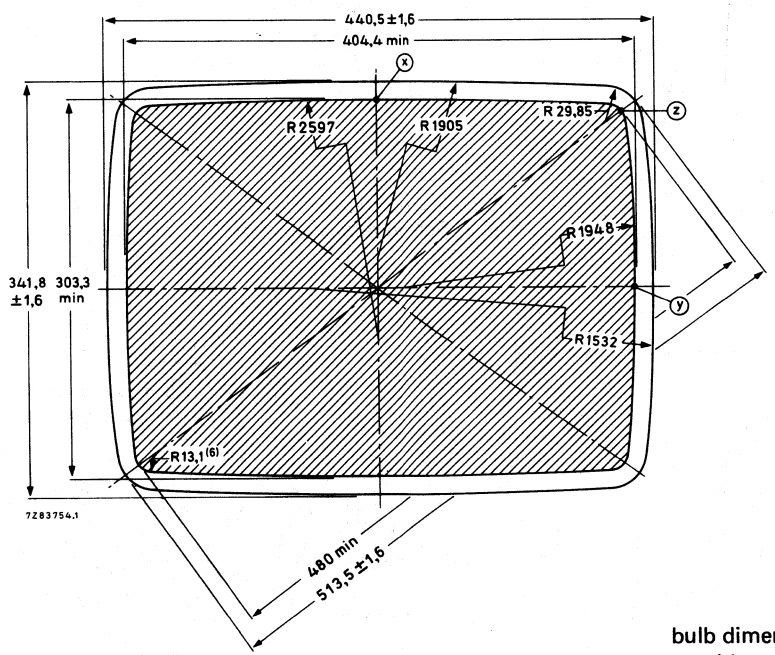

bulb dimensions at mould match line

Fig. 4.

MECHANICAL DATA (continued)

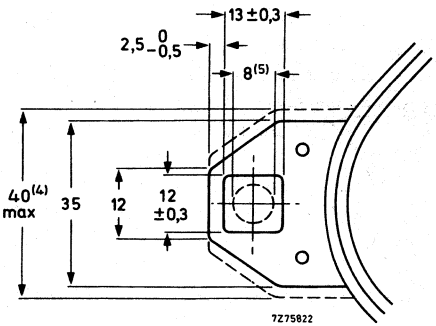

Fig. 5 Lug dimensions.

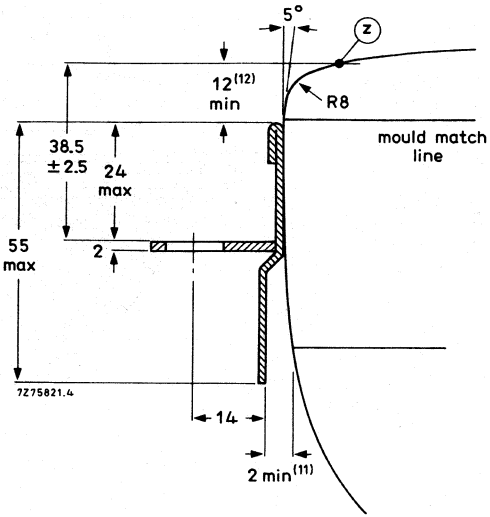

Fig. 6 Lug position.

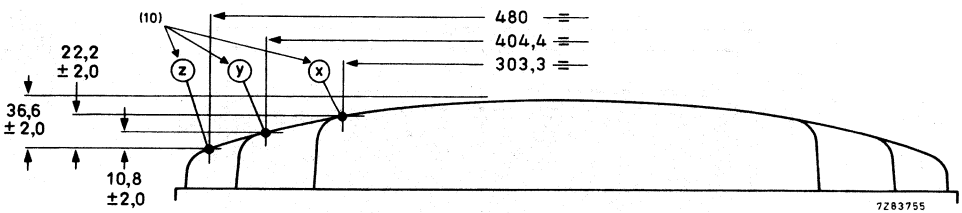

Fig. 7 Screen reference points.

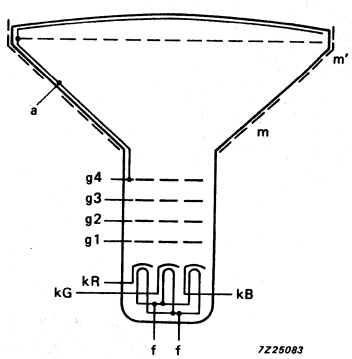

Fig. 8 Electrode configuration.

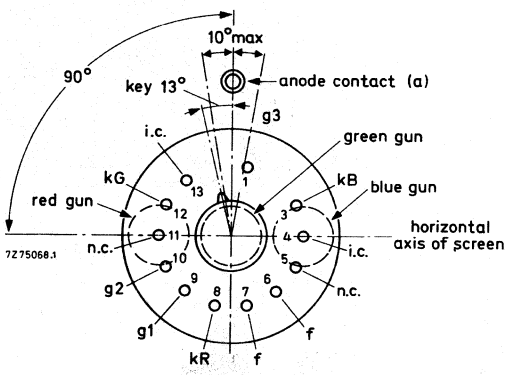

i.c. = internally connected (not to be used)
n.c. = not connected

Fig. 9 Pin arrangement.

Notes to outline drawings on the preceding pages

1. Configuration of outer conductive coating may be different, but will contain the contact area as shown in the drawing.
2. To clean this area, wipe only with a soft lintless cloth.
3. The displacement of any lug with respect to the plane through the three other lugs is max. 2 mm.
4. Minimum space to be reserved for mounting lug.
5. The position of the mounting screw in the cabinet must be within a circle of 8 mm diameter drawn around the true geometrical positions, i.e. the corners of a rectangle of 434 mm x 337 mm.
6. Co-ordinates for radius R = 13,1 mm; x = 184,58 mm, y = 131,93 mm.
7. Maximum dimensions in plane of lugs.
8. The socket for this base should not be rigidly mounted: it should have flexible leads and be allowed to move freely. The bottom circumference of base will fall within a circle concentric with the tube axis and having a diameter of 50 mm.
9. Small cavity contact J1-21, IEC 67-III-2.
10. The X, Y and Z reference points are located on the outside surface of the face plate at the intersection of the minor, major and diagonal screen axis respectively, with the minimum published screen.
11. Minimum distance between glass and rimband in plane of centre line apertures.
12. Distance from point z to any handware.

Maximum cone contour

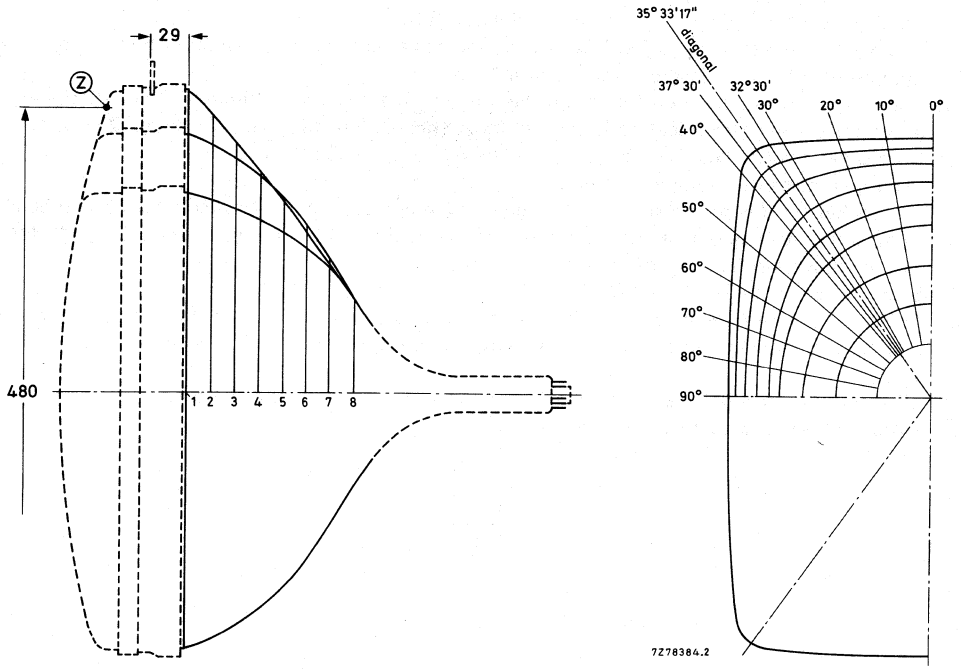

Fig. 10 Cone contour.

Table 1 Cone contour data

Dimensions in mm

section	nom. distance from section 1	distance from centre (max. values)														
		0°	10°	20°	25°	30°	32° 30'	diag. axes	37° 30'	40°	45°	50°	60°	70°	80°	90°
1	0	218,7	221,9	231,2	238,5	247,5	252,2	255,9	254,6	247,7	230,1	215,1	193,0	179,2	171,5	169,0
2	20	209,8	212,4	220,3	226,0	232,5	235,3	236,5	235,0	230,2	216,9	204,4	184,9	172,3	165,3	163,0
3	40	197,5	199,4	204,7	208,1	211,1	211,9	211,4	210,0	207,0	198,6	189,5	173,9	163,2	157,1	155,1
4	60	182,2	183,2	185,8	187,1	187,7	187,4	186,4	185,3	183,3	178,2	172,1	160,7	152,4	147,4	145,8
5	80	163,2	163,5	163,9	163,7	163,1	162,4	161,4	160,6	159,3	156,3	152,9	145,8	140,1	136,6	135,4
6	100	146,1	146,1	145,7	145,1	144,2	143,6	142,8	142,2	141,4	139,5	137,5	133,3	129,7	127,3	126,5
7	120	112,3	112,3	111,9	111,7	111,3	111,1	110,9	110,7	110,5	110,0	109,5	108,6	107,8	107,3	107,1
8	141,7	79,8	79,8	79,8	79,8	79,8	79,8	79,8	79,8	79,8	79,8	79,8	79,8	79,8	79,8	79,8

12-pin base; JEDEC B12-262

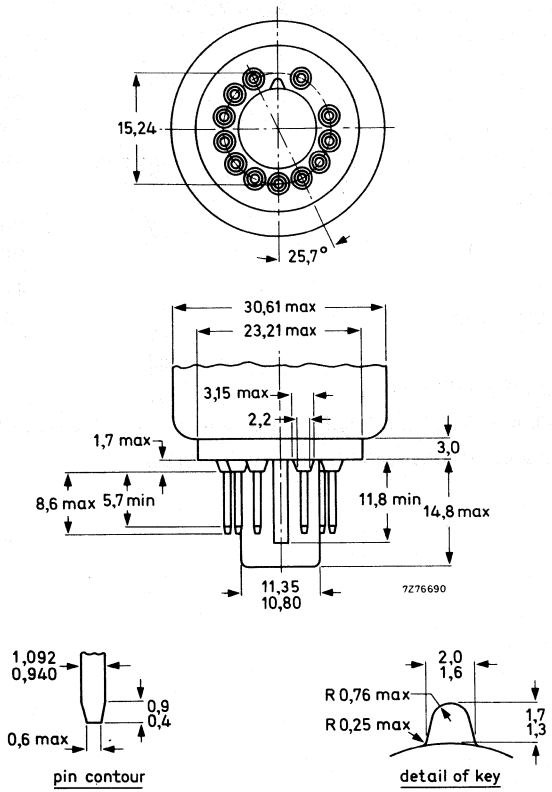

Fig. 11 JEDEC base.

TYPICAL OPERATING CONDITIONS

The voltages are specified with respect to grid 1.

Anode voltageor voltage	$V_{a, g4}$	25 kV
Grid 3 (focusing electrode) voltage	V_{g3}	4,7 to 5,5 kV
Grid 2 voltage for a spot cut-off voltage V_k = 120 V	V_{g2}	310 to 560 V
Luminance at the centre of the screen*	L	140 cd/m² ←

* Tube settings adjusted to produce white of 6500K + 7 M.P.C.D. (x = 0,313, y = 0,329), focused raster, current density 0,4 μA/cm².

EQUIPMENT DESIGN VALUES

The values are valid for anode voltages between 20 and 27,5 kV.
The voltages are specified with respect to grid 1.

Grid 3 (focusing electrode) voltage	V_{g3}	18,8 to 22% of anode voltage
Grid 2 voltage and cathode voltage for visual extinction of focused spot	V_{g2} and V_k	see Fig. 13*
Difference in cut-off voltages between guns in any tube	ΔV_k	lowest value > 80% of highest value
Video drive characteristics		see Fig. 14**
Grid 3 (focusing electrode) current	I_{g3}	−5 to + 5 μA
Grid 2 current	I_{g2}	−5 to + 5 μA
Grid 1 current under cut-off conditions	I_{g1}	−5 to + 5 μA

To produce white of 6500K + 7 M.P.C.D. (CIE co-ordinates x = 0,313, y = 0,329)

Percentage of the total anode current supplied by each gun (typical)

red gun	38,3%
green gun	35,8%
blue gun	25,9%

Ratio of anode current

	min.	av.	max.
red gun to green gun	0,7	1,1	1,4
red gun to blue gun	1,1	1,5	2,0
blue gun to green gun	0,5	0,7	1,0

* The common V_{g2} should be adjusted as follows:
Set the cathode voltage, V_k, for each gun at 120 V. Increase the V_{g2} from about 300 V to the value at which the raster of one of the guns becomes just visible. Now decrease the V_k of the remaining guns so that the rasters of these guns also become visible.

** For optimum picture performance it is recommended that the cathodes are not driven below + 10 V.

LIMITING VALUES (Design maximum rating system unless otherwise stated)

The voltages are specified with respect to grid 1.

Anode voltage	$V_{a, g4}$	max.	27,5	kV	notes 1, 2 and 3
		min.	20	kV	note 4
Long-term average current for three guns	I_a	max.	1000	μA	note 5
Grid 3 (focusing electrode) voltage	V_{g3}	max.	7	kV	
Grid 2 voltage, peak	V_{g2p}	max.	1000	V	
Cathode voltage					
positive	V_k	max.	400	V	
positive operating cut-off	V_k	max.	200	V	
negative	$-V_k$	max.	0	V	
negative peak	$-V_{kp}$	max.	2	V	
Heater voltage	V_f	6,3 V	+ 5 % −10 %		notes 1 and 6
Heater-cathode voltage					
heater negative with respect to cathode					
during equipment warm-ip period not exceeding 15 s	V_{kf}	max.	450	V	note 1
after equipment warm-up period	V_{kf}	max.	250	V	
heater positive with respect to cathode	$-V_{kfp}$	peak	200	V	note 1
	$-V_{kf}$	max.	0	V	
		(DC component values)			

Notes to the limiting values

1. Absolute maximum rating system.
2. The picture tube does not emit X-radiation above 1 μSv/h when operated within its absolute maximum ratings.
3. During adjustment on the production line this value is likely to be surpassed considerably. It is therefore strongly recommended to first make the necessary adjustments for normal operation without picture tube.
4. Operation of the tube at lower voltages impairs the luminance and resolution.
5. The short-term average anode current should be limited by circuitry to 1500 μA.
6. For maximum cathode life and optimum performance, it is recommended that the heater supply be designed for 6,3 V at zero beam current.

FLASHOVER PROTECTION

With the high voltage used with this tube (max. 27,5 kV) internal flashovers may occur. As a result of the Soft-Flash technology these flashover currents are limited to approx. 60 A offering higher set reliability, optimum circuit protection and component savings.
Primary protective circuitry using properly grounded spark gaps and series isolation resistors (preferably carbon composition) is still necessary to prevent tube damage. The spark gaps should be connected to all picture tube electrodes at the socket according to the figure below; they are not required on the heater pins. No other connections between the outer conductive coating and the chassis are permissible.
The spark gaps should be designed for a breakdown voltage at the focusing electrode (g3) of 8,5 kV ($1,5 \times V_{g3}$ max. at $V_{a,g4}$ = 25 kV), and at the other electrodes of 1,5 to 2 kV.
The values of the series isolation resistors should be as high as possible (min. 1,5 kΩ) without causing deterioration of the circuit performance. The resistors should be able to withstand an instantaneous surge of 20 kV for the focusing circuit and 12 kV for the remaining circuits without arcing.
Additional information is available on request.

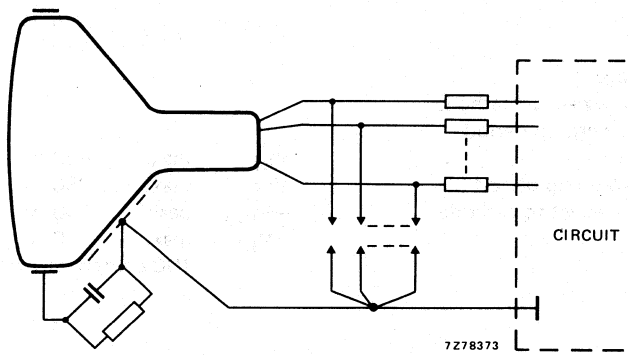

Fig. 12 Flashover protection circuit.

BEAM CORRECTIONS

Maximum required correction for register, as measured at the centre of the screen in any direction	0,08 mm
Centre convergence displacement of the blue and red beams is contained within a circle; max. diameter of circle	5 mm
Centre convergence displacement between the green beam and converged blue and red beams is contained within a circle; maximum diameter of circle	2,5 mm
Maximum centring error in any direction after colour purity, static convergence, and horizontal centre line correction, measured with deflection coils in nominal position	5 mm

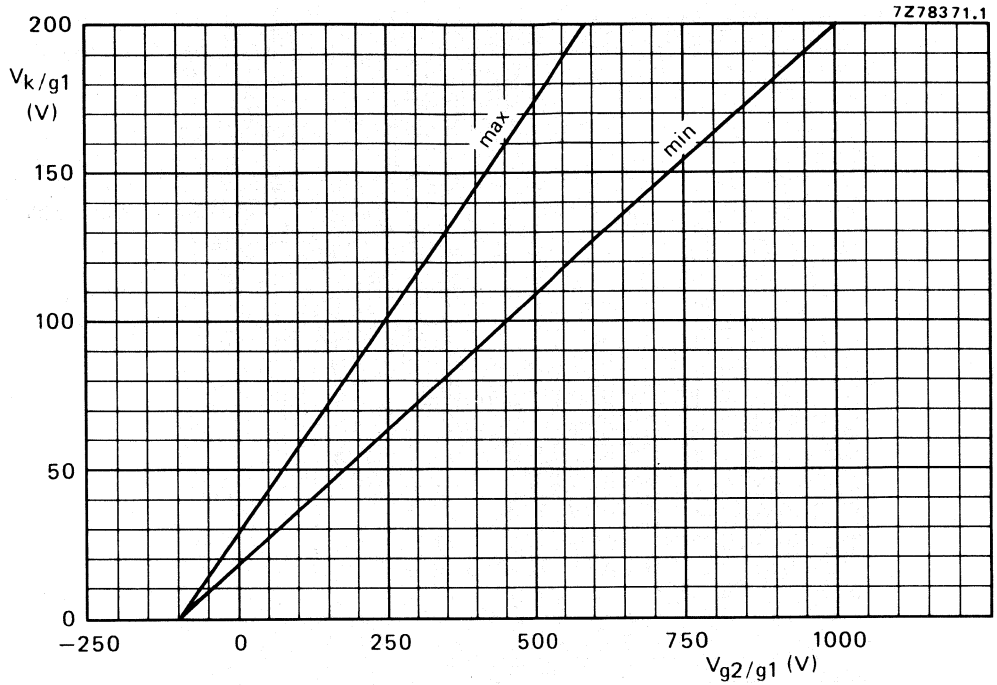

Fig. 13 Spot cut-off design chart (cathode drive), V_{g3} adjusted for focus, $V_{a,g4}$ = 25 kV.

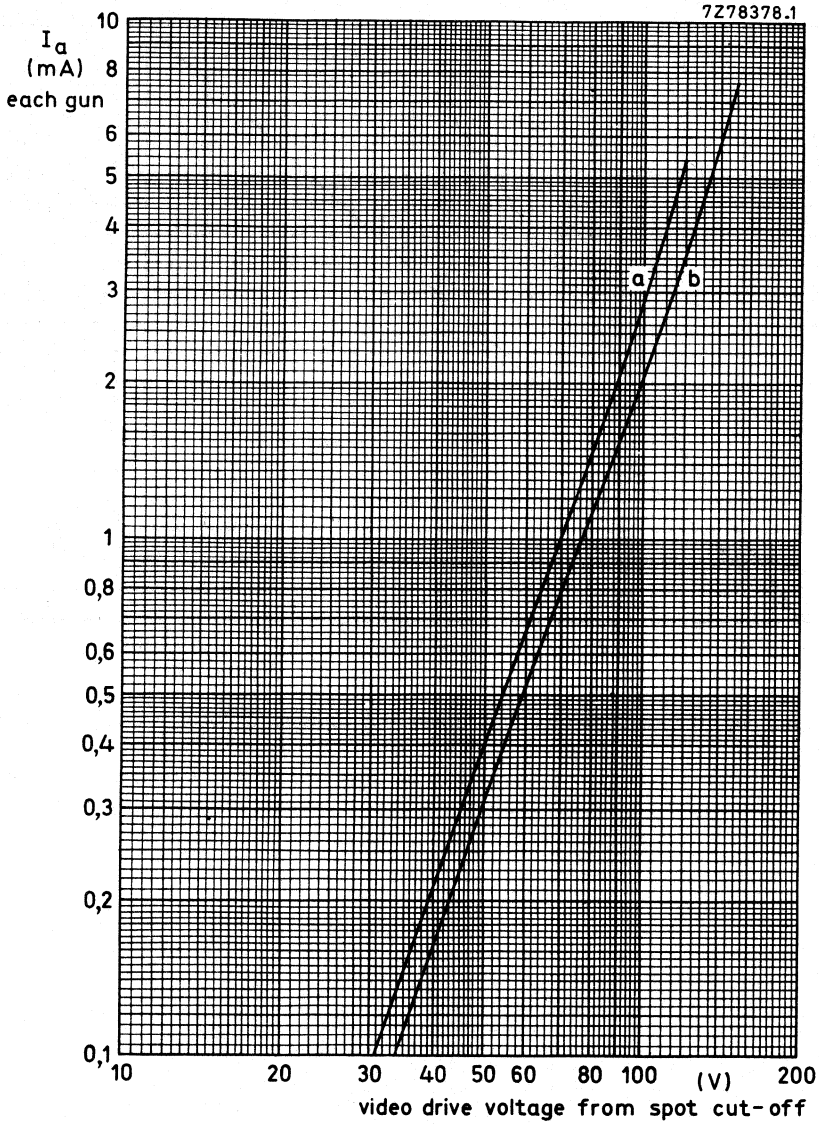

Fig. 14 Typical cathode drive characteristics.

V_f = 6,3 V;
$V_{a,g4}$ = 25 kV;
V_{g3} adjusted for focus;
V_{g2} adjusted to provide spot cut-off for desired fixed V_K.

curve a = spot cut-off = 120 V;
curve b = spot cut-off = 150 V.

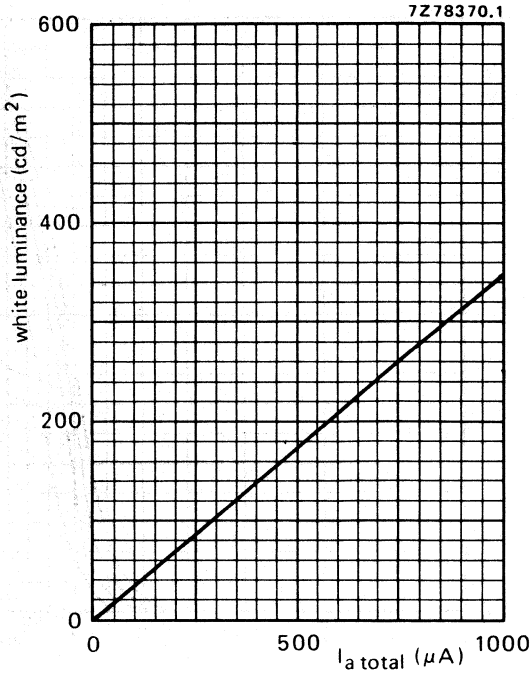

Fig. 15 Luminance at the centre of the screen as a function of I_{total}.
$V_{a, g4}$ = 25 kV, V_f = 6,3 V, V_{g3} adjusted for optimum focus.
Scanned area = 404,4 mm x 303,3 mm;
CIE co-ordinates x = 0,313, y = 0,329.

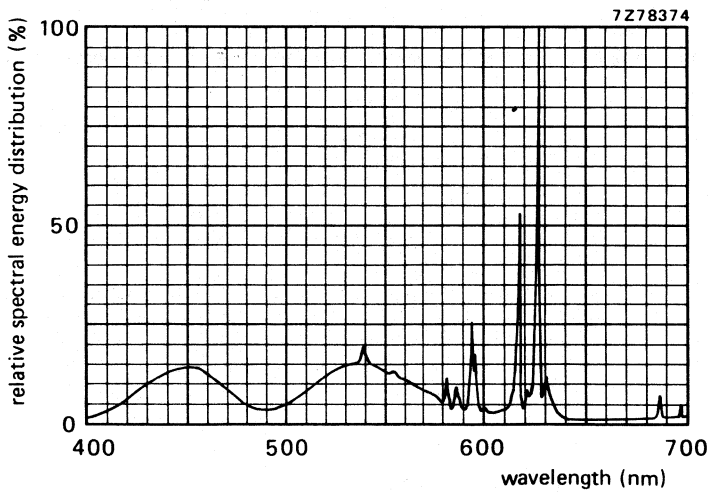

Fig. 16 Simultaneous excitation of red, green and blue phosphor, measured in a tube, to produce white of x = 0,313, y = 0,329. Exact shape of the peaks depends on the resolution of the measuring apparatus.

Colour co-ordinates:	x	y
red	0,635	0,340
green	0,315	0,600
blue	0,150	0,060

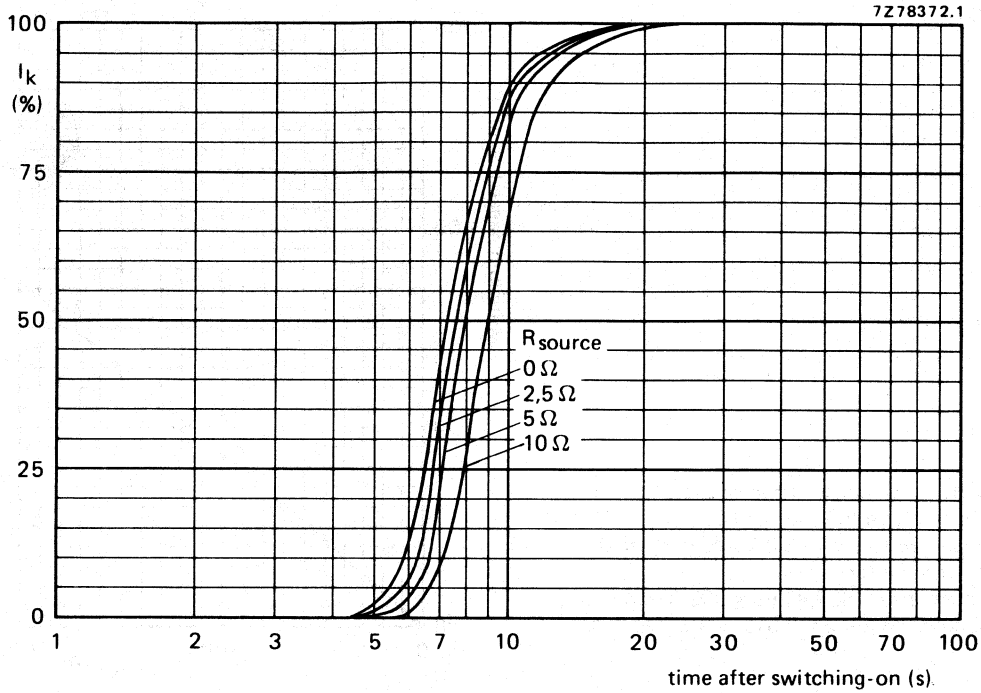

Fig. 17 Cathode heating time after switching on, measured under typical operating conditions.

DEGAUSSING

The picture tube is provided with an internal magnetic shield. This shield and the shadow mask with its suspension system may be provided with an automatic, degaussing system, consisting of two coils covering top and bottom cone parts, or one large coil shaped in the form of a figure eight, with one half on the top and the other half on the bottom cone part.

For proper degaussing an initial magnetomotive force (MMF) of 300 ampere-turns is required in each of the coils. This MMF has to be gradually decreased by appropriate degaussing circuitry. In the steady state, no significant MMF should remain in the coils ($\leqslant$ 0,3 ampere-turns).

If single-phase power rectification is employed in the TV circuitry, provision should be included to prevent asymmetric distortion of the AC voltage applied to the degaussing circuit due to high DC inrush currents.

Examples of a double-coil and of a single-coil system are given below.

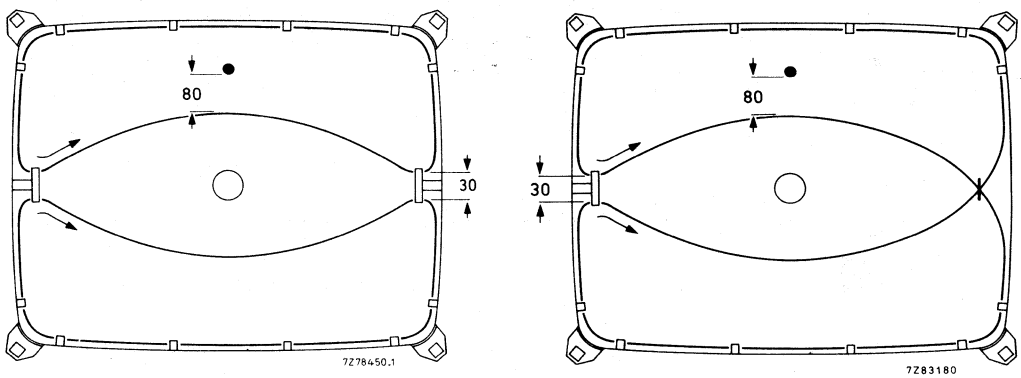

Fig. 18 Position of degaussing coils on the picture tube.

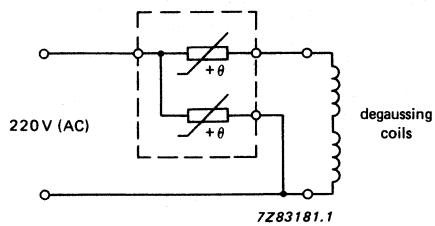

Fig. 19 Degaussing circuit using dual PTC thermistor.

Data of each degaussing coil

	double-coil system	single-coil system
Circumference	117 cm	237 cm
Number of turns	60	60
Copper-wire diameter	0,35 mm	0,35 mm
Resistance (R_c)	12,5 Ω	25,1 Ω
Catalogue number of appropriate dual PTC thermistor	2322 662 98009	2322 662 98009

COLOUR PICTURE TUBE ASSEMBLY

- Factory preset tube/coil assembly
- Self-converging and raster correction free
- 51 cm, 90° colour picture tube A51-570X
- Hybrid saddle toroidal deflection unit AT1237/50

QUICK REFERENCE DATA

Deflection angle	90°
Minimum useful screen diagonal	51 cm
Overall length	425 mm
Neck diameter	29.1 mm

MECHANICAL DATA

Dimensions in mm

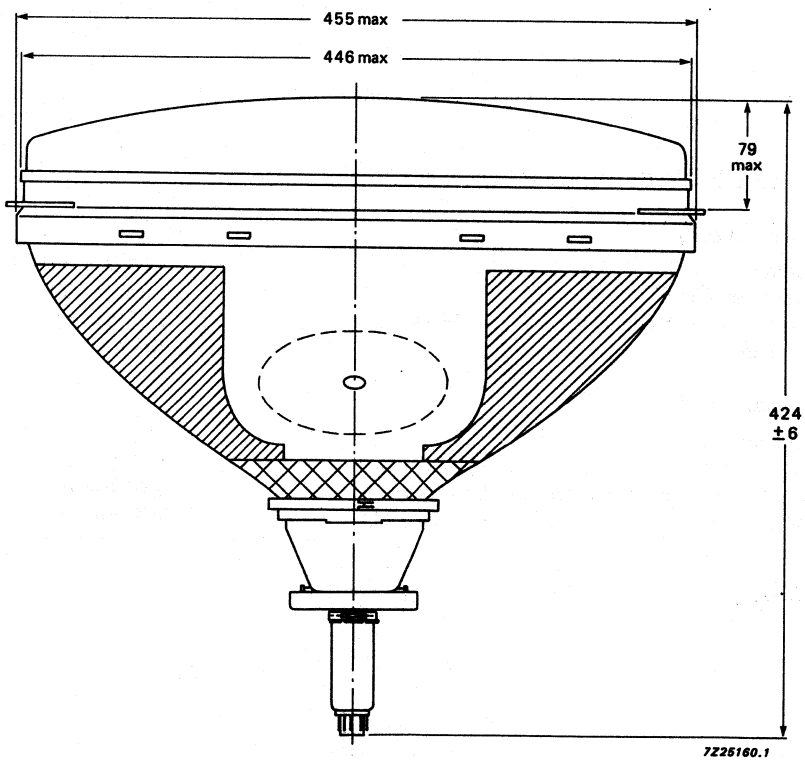

Fig. 1 Colour picture tube assembly A51-570X3750.

MECHANICAL DATA

Dimensions in mm

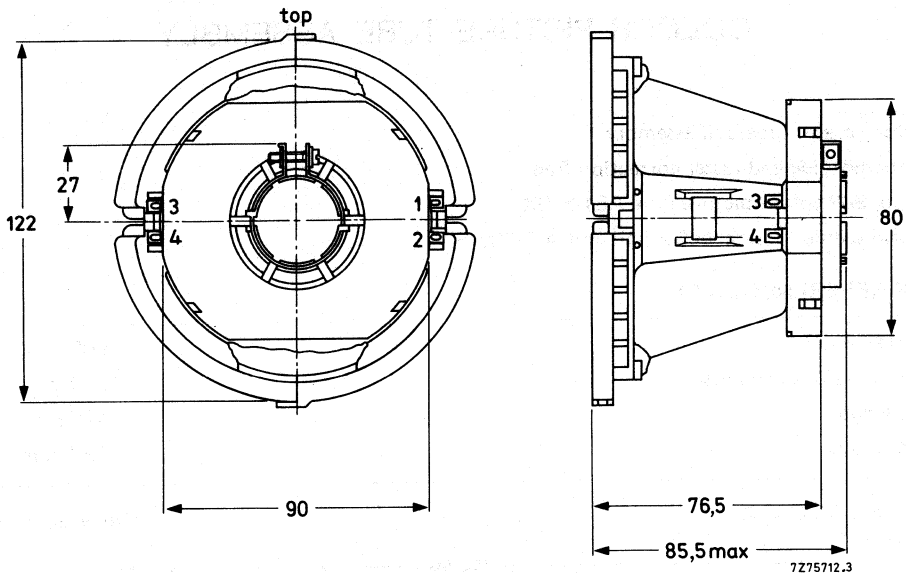

Fig. 2 Deflection unit AT1237/50.

ELECTRICAL DATA OF DEFLECTION UNIT

Line deflection coils	
Inductance	1.66 mH ± 5%
Resistance at 25 °C	1.9 Ω ± 10%
Line deflection current, raster scan, at 25 kV	3.25 A(p-p)
Raster scan	404 mm
Field deflection coils	
Inductance	114 mH ± 10%
Resistance at 25 °C	60.0 Ω ± 7%
Field deflection current, raster scan, at 25 kV	0.40 A(p-p)
Raster scan	303 mm

Cross-talk	a voltage of 10 V, 15625 Hz applied to the line coils causes no more than 0.20 V across the field coils (damping resistors included)
Insulation resistance at 1 kV DC	
between line and field coils	> 500 MΩ
between line coil and core clamp	> 500 MΩ
between field coil and core clamp	> 10 MΩ
Maximum operating temperature (average copper temperature)	+90 °C
Storage temperature range	−25 to +90 °C
Flame retardent	according to UL 413, category 94V-1

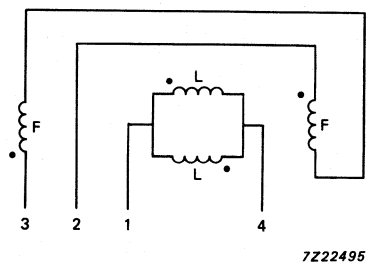

Fig. 3 Connection diagram. L = line coils; F = field coils.

The beginning of the windings is indicated with ●.

ENVIRONMENTAL TEST SPECIFICATIONS OF DEFLECTION UNITS

Vibration	IEC 68-2-6 (test Fc)
Shock	IEC 68-2-27 (test Ea)
Bump	IEC 68-2-29 (test Eb; 25g)
Cold	IEC 68-2-1 (test Ab)
Dry heat	IEC 68-2-2 (test Bb)
Damp heat, steady state	IEC 68-2-3 (test Ca)
Cyclic damp heat	IEC 68-2-30 (test Db)
Change of temperature	IEC 68-2-14 (test Nb)

Hi-Bri COLOUR PICTURE TUBE

- 90° deflection
- In-line gun, thermally stable; electrostatic hi-bi potential for improved focus
- 29,1 mm neck diameter
- Hi-Bri screen with pigmented phosphors featuring high brightness and increased contrast performance
- Soft-Flash technology offering improved set reliability
- Slotted shadow mask optimized for minimum moiré
- Fine pitch over entire screen
- Phosphor lines follow glass contour
- Quick-heating cathodes
- Internal magnetic shield
- Reinforced envelope for push-through mounting
- Anti-crackle coating
- When combined with an appropriate hybrid saddle toroidal deflection unit (e.g. AT1236 or AT1480), it forms a self-converging and raster correction free assembly.

QUICK REFERENCE DATA

Deflection angle	90°
Face diagonal	51 cm
Overall length	431,5 mm
Neck diameter	29,1 mm
Heating	6,3 V, 685 mA
Anode voltage	25 kV
Focusing voltage	28% of anode voltage

ELECTRON-OPTICAL DATA

Electron gun system		unitized triple-aperture electrodes
Focusing method		electrostatic
Focus lens		hi-bi potential
Deflection method		magnetic
Deflection angles		
diagonal		approx. 90°
horizontal		approx. 78°
vertical		approx. 60°

ELECTRICAL DATA

Capacitances		
anode to external conductive coating including rimband	$C_{a(m+m')}$	> 1500 pF
grid 1 to all other electrodes	C_{g1}	17 pF
cathode of each gun to all other electrodes	C_{kR}, C_{kG}, C_{kB}	5 pF
focusing electrode to all other electrodes	C_{g3}	6 pF
Heating		indirect by AC or DC
heater voltage	V_f	6,3 V
heater current	I_f	685 mA

OPTICAL DATA

Screen	metal-backed vertical phosphor stripes; phosphor lines follow glass contour
Screen finish	satinized
Useful screen dimensions	
diagonal	min. 480,0 mm
horizontal axis	min. 404,4 mm
vertical axis	min. 303,3 mm
area	min. 1190 cm^2
Phosphors	
red	pigmented europium activated rare earth
green	sulphide type
blue	pigmented sulphide type
Centre-to-centre distance of vertical identical colour phosphor stripes, at screen centre	0,8 mm
Light transmission of face glass at centre	64%

MECHANICAL DATA (see Figs 1 to 9)

Overall length	431,4 ± 5 mm
Neck diameter	$29{,}1\ ^{+1{,}4}_{-0{,}7}$ mm*
Bulb dimensions	
diagonal	max. 515,1 mm
width	max. 442,1 mm
height	max. 343,4 mm
Base	JEDEC B10-277
Anode contact	small cavity contact J1-21, IEC 67-III-2
Mounting position	anode contact on top
Net mass	approx. 13 kg

Handling

During shipment and handling the tube should not be subjected to accelerations greater than 350 m/s^2 in any direction.

* In the region of 70 mm from the neck end, the maximum diameter is 30 mm.

MECHANICAL DATA (continued)

Dimensions in mm

Notes are given after the drawings.

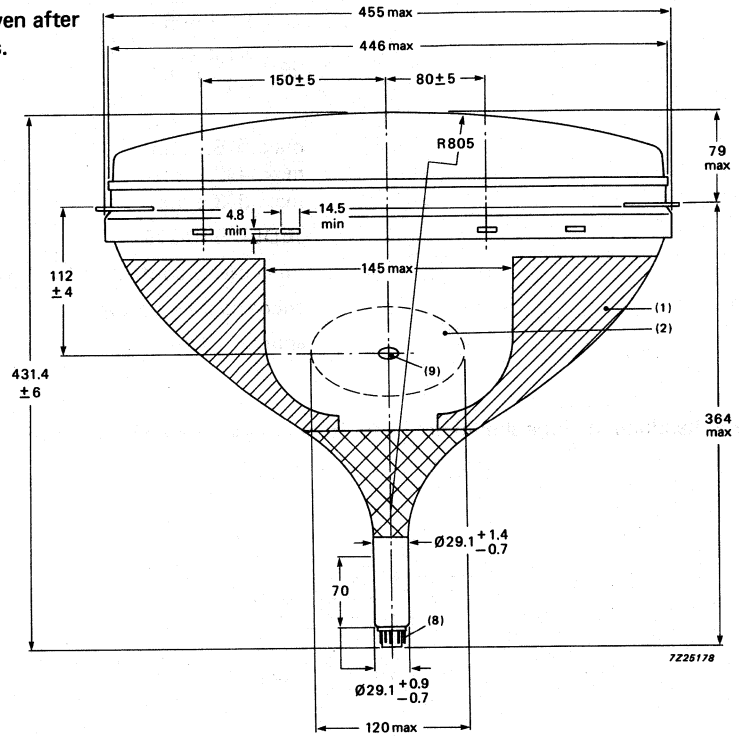

Fig 1.

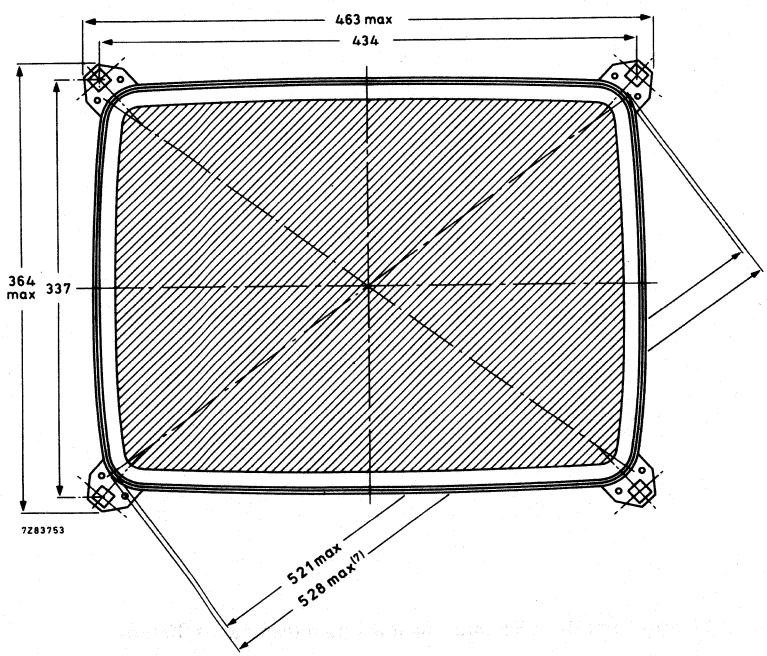

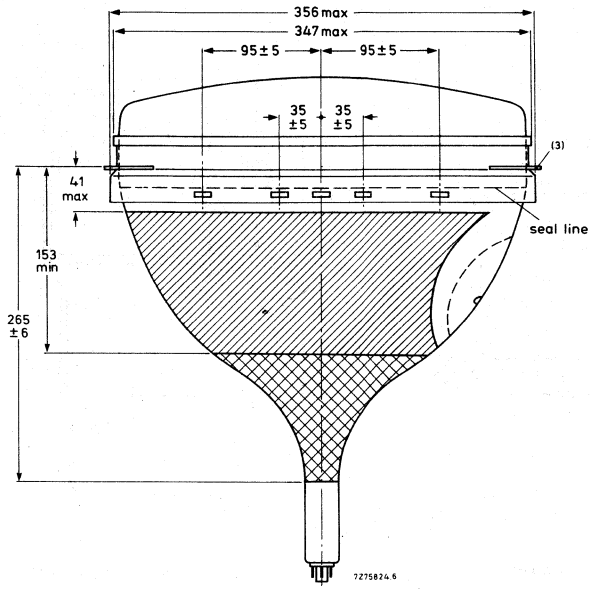
356 max
347 max
95±5
95±5
35 ±5
35 ±5
(3)
41 max
153 min
265 ±6
seal line
7Z75824.6

Fig 3.

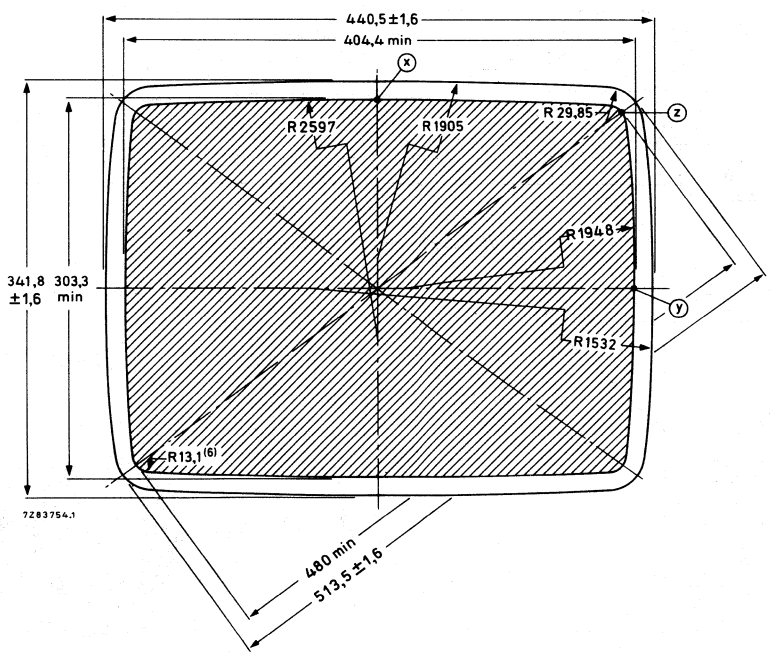
440,5±1,6
404,4 min
X
R 2597
R 1905
R 29,85
Z
R 1948
341,8 ±1,6
303,3 min
Y
R 1532
R13,1 (6)
7Z83754.1
480 min
513,5±1,6

Fig. 4

MECHANICAL DATA (continued)

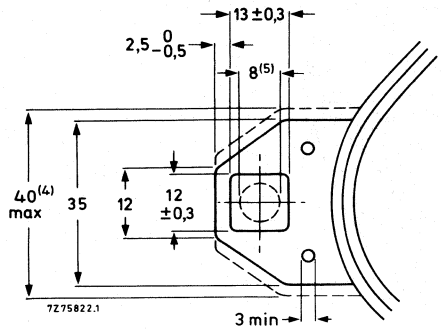

Fig. 5 Lug dimensions.

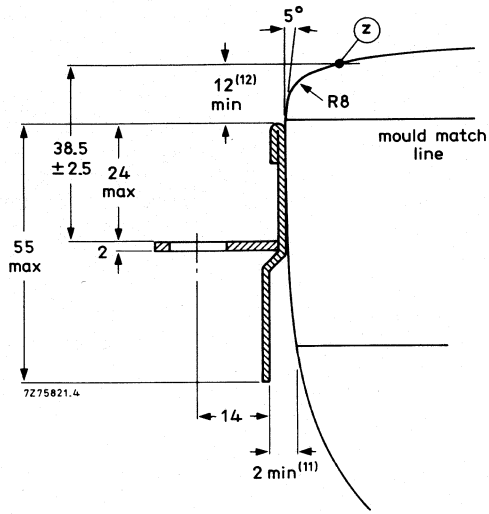

Fig. 6 Lug position.

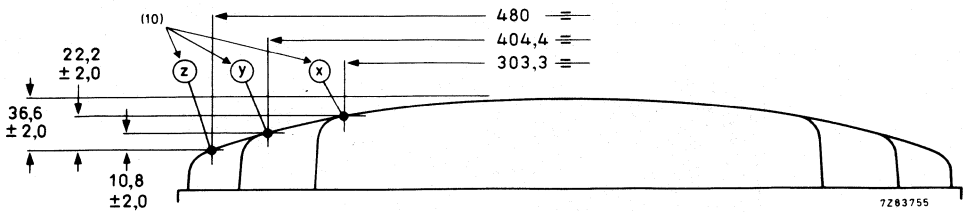

Fig. 7 Screen reference points.

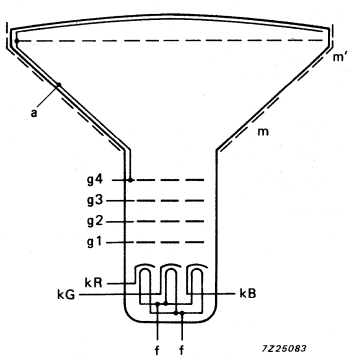

Fig. 8 Electrode configuration.

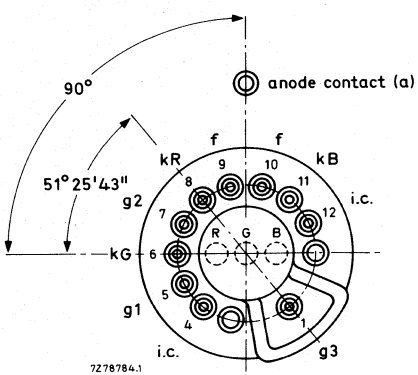

i.c. = internally connected (not to be used).

Fig. 9 Pin arrangement.

Notes to outline drawings on the preceding pages

1. Configuration of outer conductive coating may be different, but will contain the contact area as shown in the drawing.
2. To clean this area, wipe only with a soft lintless cloth.
3. The displacement of any lug with respect to the plane through the three other lugs is max. 2 mm. This deviation is incorporated in the tolerance of ± 2,5 mm.
4. Minimum space to be reserved for mounting lug.
5. The position of the mounting screw in the cabinet must be within a circle of 8 mm diameter drawn around the true geometrical positions, i.e. the corners of a rectangle of 434 mm x 337 mm.
6. Co-ordinates for radius R = 13,1 mm: x = 184,58 mm, y = 131,93 mm.
7. Not applicable.
8. The socket for this base should not be rigidly mounted; it should have flexible leads and be allowed to move freely. After mounting of the tube in the cabinet note that the position of the base can fall within a circle, having a diameter of max. 50 mm, concentric with an imaginary tube axis.
9. Small cavity contact J1-21, IEC 67-III-2.
10. The X, Y and Z reference points are located on the outside surface of the face plate at the intersection of the minor, major and diagonal screen axis respectively, with the minimum published screen.
11. Minimum distance between glass and rimband in plane of centre line apertures.
12. Distance from point z to any hardware.

Maximum cone contour

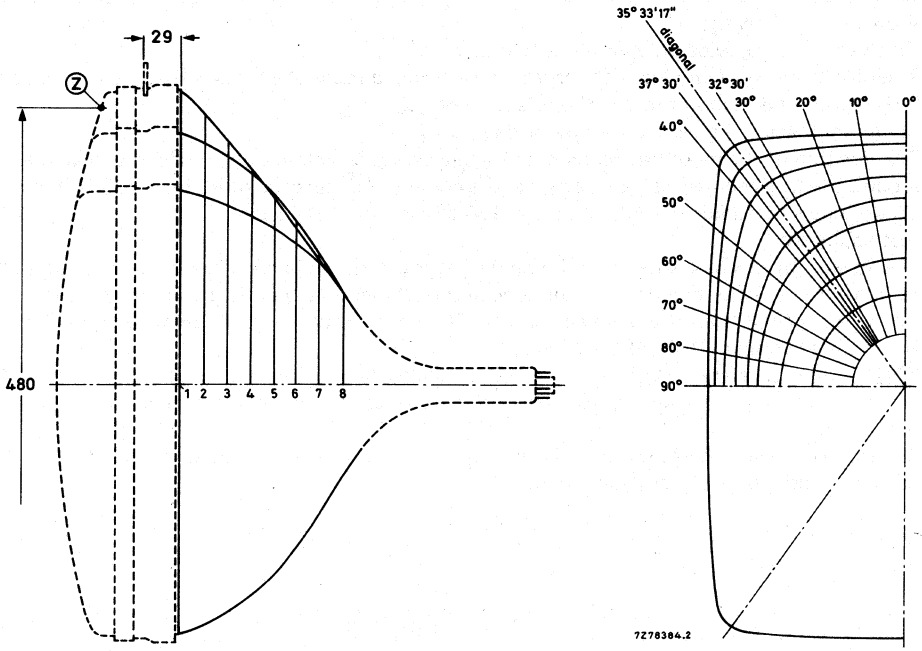

Fig. 10 Cone contour.

Table 1 Cone contour data

Dimensions in mm

section	nom. distance from section 1	distance from centre (max. values)														
		0°	10°	20°	25°	30°	32° 30'	diag. axes	37° 30'	40°	45°	50°	60°	70°	80°	90°
1	0	218,7	221,9	231,2	238,5	247,5	252,2	255,9	254,6	247,7	230,1	215,1	193,0	179,2	171,5	169,0
2	20	209,8	212,4	220,3	226,0	232,5	235,3	236,5	235,0	230,2	216,9	204,4	184,9	172,3	165,3	163,0
3	40	197,5	199,4	204,7	208,1	211,1	211,9	211,4	210,0	207,0	198,6	189,5	173,9	163,2	157,1	155,1
4	60	182,2	183,2	185,8	187,1	187,7	187,4	186,4	185,3	183,3	178,2	172,1	160,7	152,4	147,4	145,8
5	80	163,2	163,5	163,9	163,7	163,1	162,4	161,4	160,6	159,3	156,3	152,9	145,8	140,1	136,6	135,4
6	100	146,1	146,1	145,7	145,1	144,2	143,6	142,8	142,2	141,4	139,5	137,5	133,3	129,7	127,3	126,5
7	120	112,3	112,3	111,9	111,7	111,3	111,1	110,9	110,7	110,5	110,0	109,5	108,6	107,8	107,3	107,1
8	141,7	79,8	79,8	79,8	79,8	79,8	79,8	79,8	79,8	79,8	79,8	79,8	79,8	79,8	79,8	79,8

Base JEDEC B10-277

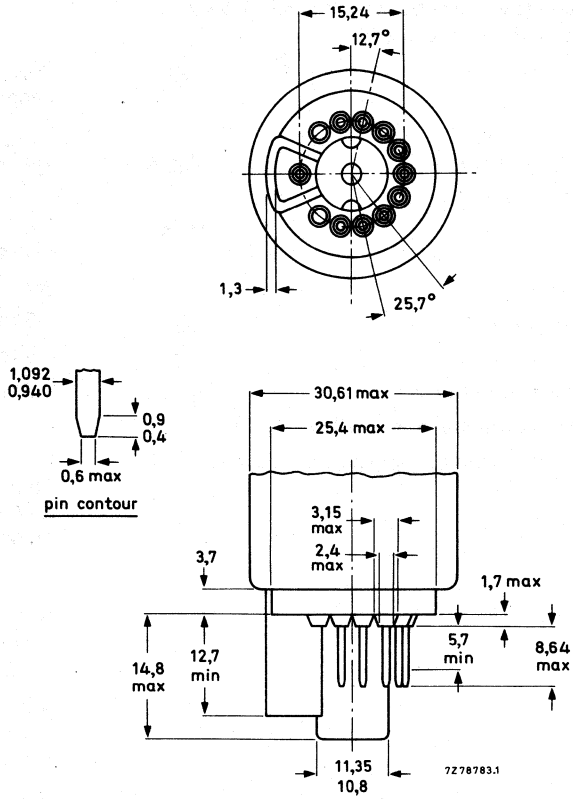

Fig. 11 JEDEC base.

TYPICAL OPERATING CONDITIONS

The voltages are specified with respect to grid 1.

Anode voltage	$V_{a,g4}$	25 kV
Grid 3 (focusing electrode) voltage	V_{g3}	6,6 to 7,5 kV
Grid 2 voltage for a spot cut-off voltage V_k = 140 V	V_{g2}	390 to 760 V
Luminance at the centre of the screen*	L	140 cd/m² ←

* Tube settings adjusted to produce white D (x = 0,313, y = 0,329), focused raster, current density 0,4 μA/cm².

EQUIPMENT DESIGN VALUES

The values are valid for anode voltages between 20 and 27,5 kV.
The voltages are specified with respect to grid 1.

Grid 3 (focusing electrode) voltage	V_{g3}	26,6 to 29,8% of anode voltage
Grid 2 voltage and cathode voltage for visual extinction of focused spot	V_{g2} and V_k	see Fig. 13*
Difference in cut-off voltages between guns in any tube	ΔV_k	lowest value > 80% of highest value
Video drive characteristics		see Fig. 14**
Grid 3 (focusing electrode) current	I_{g3}	−5 to + 5 μA
Grid 2 current	I_{g2}	−5 to + 5 μA
Grid 1 current under cut-off conditions	I_{g1}	−5 to + 5 μA

To produce white D, CIE co-ordinates x = 0,313, y = 0,329.

Percentage of the total anode current supplied by each gun (typical)

red gun	38,3%
green gun	35,8%
blue gun	25,9%

Ratio of anode currents

red gun to green gun	min.	0,8
	average	1,1
	max.	1,4
red gun to blue gun	min.	1,1
	average	1,5
	max.	1,9
blue gun to green gun	min.	0,5
	average	0,7
	max.	0,9

* The common V_{g2} should be adjusted as follows:
Set the cathode voltage, V_k, for each gun at 150 V. Increase the V_{g2} from about 400 V to the value at which the raster of one of the guns becomes just visible. Now decrease the V_k of the remaining guns so that the rasters of these guns also become visible.

** For optimum picture performance it is recommended that the cathodes are not driven below + 10 V.

LIMITING VALUES (Design maximum rating system unless otherwise stated)

The voltages are specified with respect to grid 1.

Anode voltage	$V_{a, g4}$	max.	27,5 kV	notes 1, 2 and 3
		min.	20 kV	note 4
Long-term average current for three guns	I_a	max.	1000 μA	note 5
Grid 3 (focusing electrode) voltage	V_{g3}	max.	11 kV	
Grid 2 voltage, peak	V_{g2p}	max.	1000 V	
Cathode voltage				
positive	V_k	max.	400 V	
positive operating cut-off	V_k	max.	200 V	
negative	$-V_k$	max.	0 V	
negative peak	$-V_{kp}$	max.	2 V	
Heater voltage	V_f	6,3 V	+ 5 %	notes 1 and 6
			−10 %	
Heater-cathode voltage				
heater negative with respect to cathode				
during equipment warm-up period not exceeding 15 s	V_{kf}	max.	450 V	note 1
after equipment warm-up period	V_{kf}	max.	250 V	
heater positive with respect to cathode	$-V_{kfp}$	peak	200 V	note 1
	$-V_{kf}$	max.	0 V	
		(DC component value)		

Notes to the limiting values

1. Absolute maximum rating system.
2. The picture tube does not emit X-radiation above 1 μSv/h when operated within its absolute maximum ratings.
3. During adjustment on the production line this value is likely to be surpassed considerable. It is therefore strongly recommended to first make the necessary adjustments for normal operation without picture tube.
4. Operation of the tube at lower voltages impairs the luminance and resolution.
5. The short-term average anode current should be limited by circuitry to 1500 μA.
6. For maximum cathode life and optimum performance, it is recommended that the heater supply be designed for 6,3 V at zero beam current.

FLASHOVER PROTECTION

With the high voltage used with this tube (max. 27,5 kV) internal flashovers may occur. As a result of the Soft-Flash technology these flashover currents are limited to approx. 60 A offering higher set reliability, optimum circuit protection and component savings.
Primary protective circuitry using properly grounded spark gaps and series isolation resistors (preferably carbon composition) is still necessary to prevent tube damage. The spark gaps should be connected to all picture tube electrodes at the socket according to the figure below; they are not required on the heater pins. No other connections between the outer conductive coating and the chassis are permissible.
The spark gaps should be designed for a breakdown voltage at the focusing electrode (g3) of 11,5 kV ($1,5 \times V_{g3}$ max. at $V_{a,g4}$ = 25 kV), and at the other electrodes of 1,5 to 2 kV.
The values of the series isolation resistors should be as high as possible (min. 1,5 kΩ) without causing deterioration of the circuit performance. The resistors should be able to withstand an instantaneous surge of 20 kV for the focusing circuit and 12 kV for the remaining circuits without arcing.
Additional information is available on request.

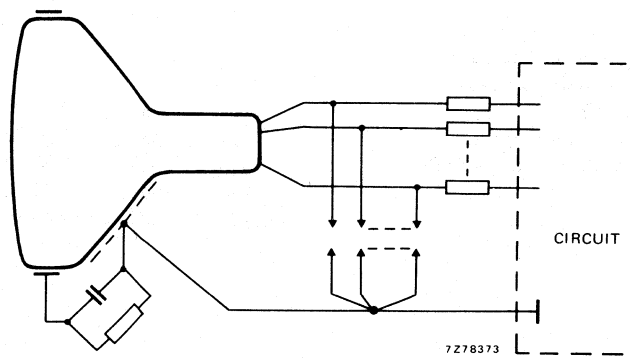

Fig. 12 Flashover protection circuit.

BEAM CORRECTIONS

Maximum required correction for register, as measured at the centre of the screen in any direction	0,08 mm
Centre convergence displacement of the blue and red beams is contained within a circle; max. diameter of circle	5 mm
Centre convergence displacement between the green beam and converged blue and red beams is contained within a circle; maximum diameter of circle	2,5 mm
Maximum centring error in any direction after colour purity, static convergence, and horizontal centre line correction, measured with deflection coils in nominal position	5 mm

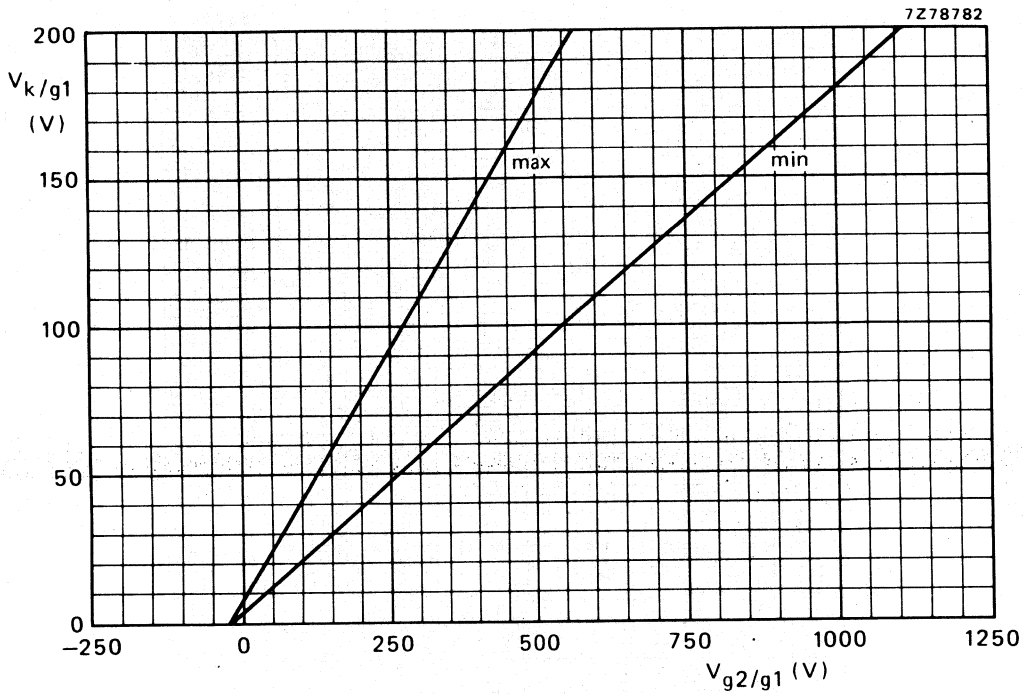

Fig. 13 Spot cut-off design chart (cathode drive), V_{g3} adjusted for focus, $V_{a,g4}$ = 20 to 27,5 kV.

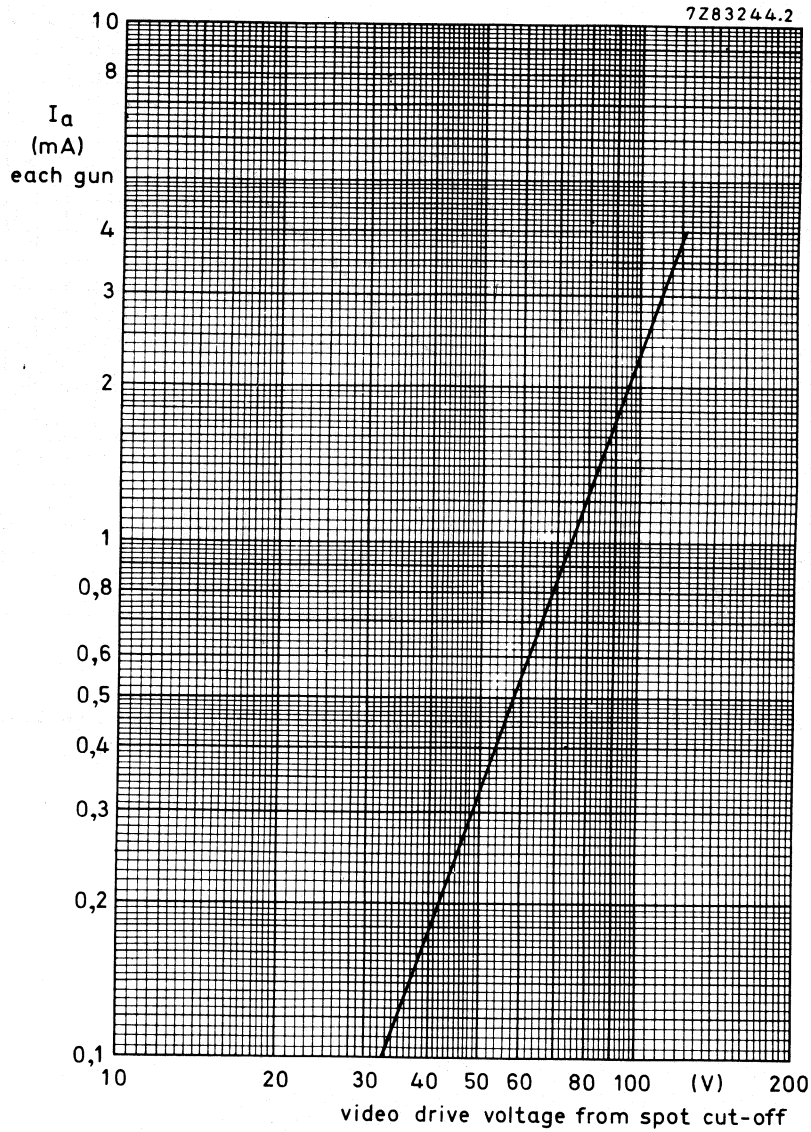

Fig. 14 Typical cathode drive characteristics.

V_f = 6,3 V
$V_{a,g4}$ = 25 kV
V_{g3} adjusted for focus
V_{g2} adjusted to provide spot cut-off for V_K = 140 V

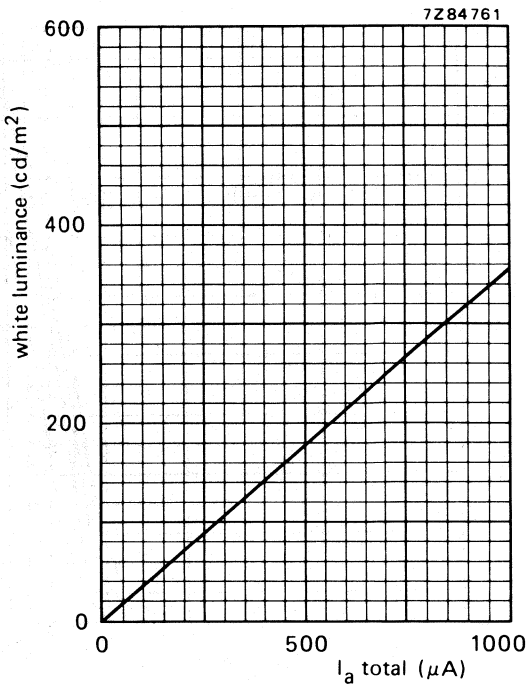

Fig 15 Luminance at the centre of the screen as a function of I_{total}.
$V_{a,g4}$ = 25 kV.
Scanned area = 404,4 mm x 303,3 mm;
CIE co-ordinates x = 0,313, y = 0,329.

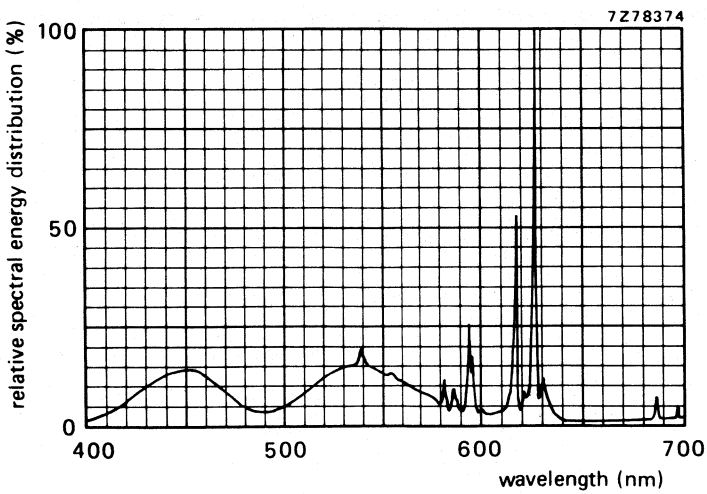

Fig. 16 Simultaneous excitation of red, green and blue phosphor, measured in a tube, to produce white of x = 0,313, y = 0,329. Exact shape of the peaks depends on the resolution of the measuring apparatus.

Colour co-ordinates:	x	y
red	0,635	0,340
green	0,315	0,600
blue	0,150	0,060

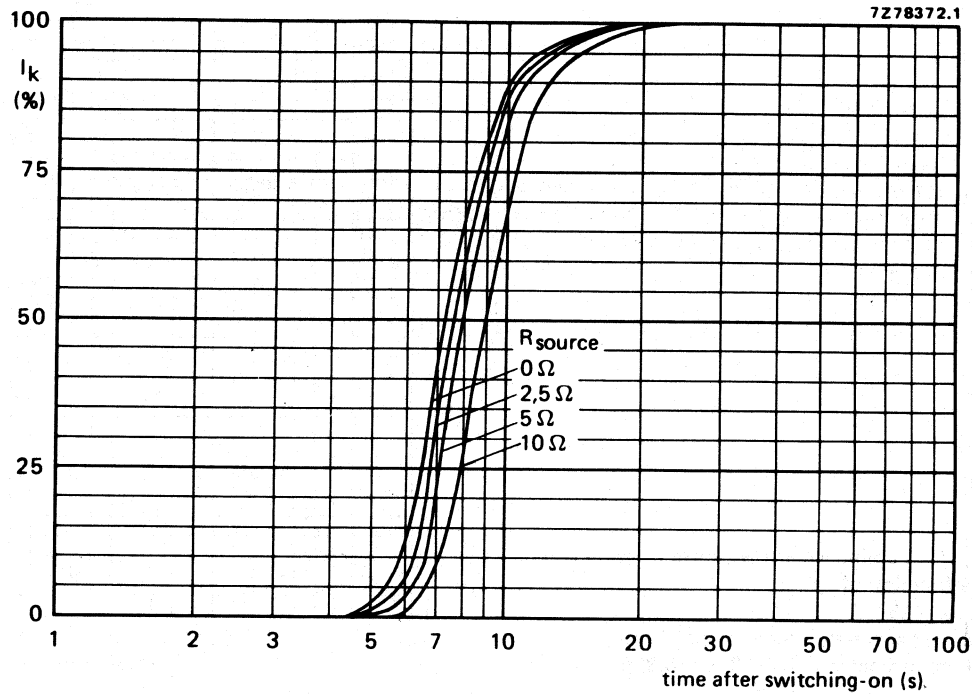

Fig. 17 Cathode heating time after switching on, measured under typical operating conditions.

DEGAUSSING

The picture tube is provided with an internal magnetic shield. This shield and the shadow mask with its suspension system may be provided with an automatic degaussing system, consisting of two coils covering top and bottom cone parts, or one large coil shaped in the form of a figure eight, with one half on the top and the other half on the bottom cone part.
For proper degaussing an initial magnetomotive force (MMF) of 300 ampere-turns is required in each of the coils. This MMF has to be gradually decreased by appropriate degaussing circuitry. In the steady state, no significant MMF should remain in the coils ($\leqslant$ 0,3 ampere-turns).
If single-phase power rectification is employed in the TV circuitry, provision should be included to prevent asymmetric distortion of the AC voltage applied to the degaussing circuit due to high DC inrush currents.

Examples of a double-coil and of a single-coil system are given below.

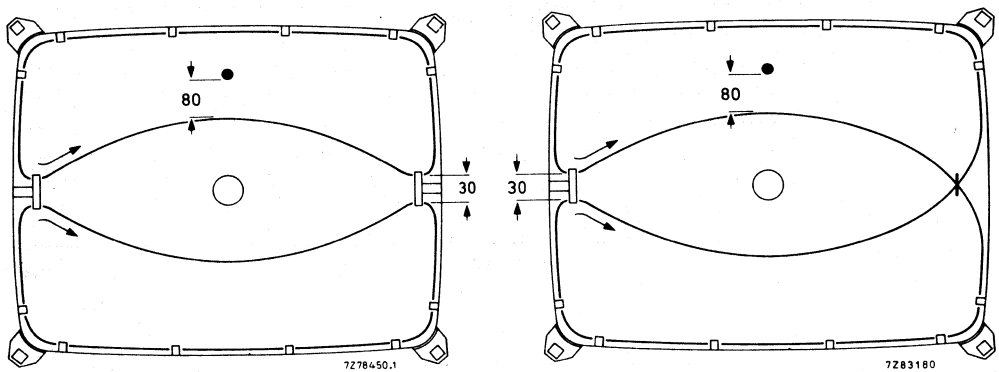

Fig. 18 Position of degaussing coils on the picture tube.

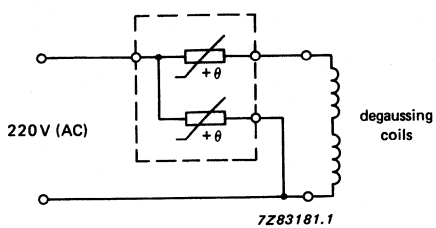

Fig. 19 Degaussing circuit using dual PTC thermistor.

Data of each degaussing coil

	double-coil system	single-coil system
Circumference	117 cm	237 cm
Number of turns	60	60
Copper-wire diameter	0,35 mm	0,35 mm
Resistance (R_c)	12,5 Ω	25,1 Ω
Catalogue number of appropriate dual PTC thermistor	2322 662 98009	2322 662 98009

COLOUR PICTURE TUBE ASSEMBLY

- Factory preset tube/coil assembly
- Self-converging and raster correction free
- 51 cm, 90° colour picture tube A51-590X
- Hybrid saddle toroidal deflection unit AT1236/20

QUICK REFERENCE DATA

Deflection angle	90°
Minimum useful screen diagonal	51 cm
Overall length	431.5 mm
Neck diameter	29.1 mm

MECHANICAL DATA

Dimensions in mm

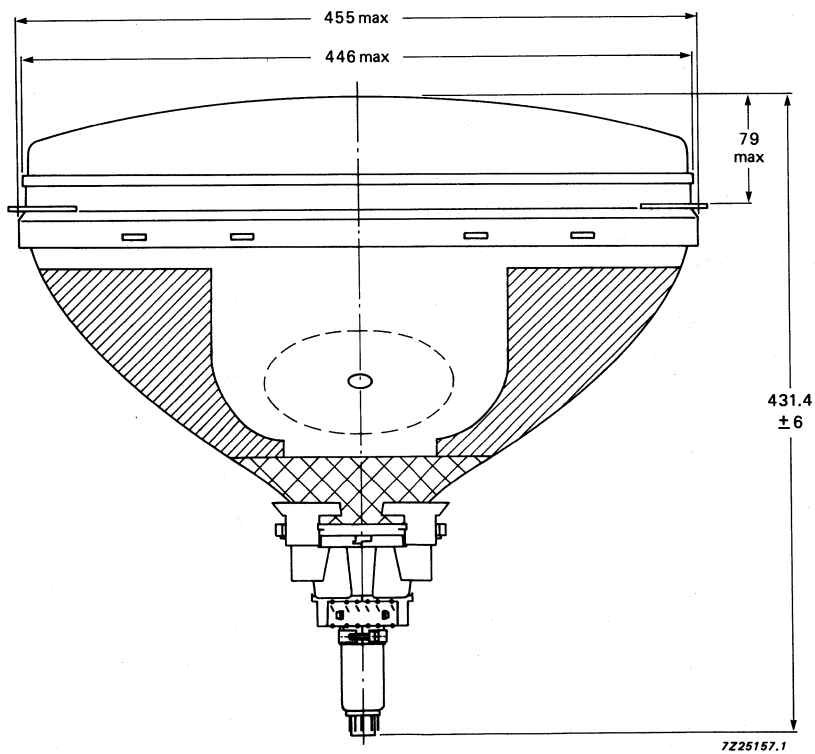

Fig. 1 Colour picture tube assembly A51-590X3620.

MECHANICAL DATA

Dimensions in mm

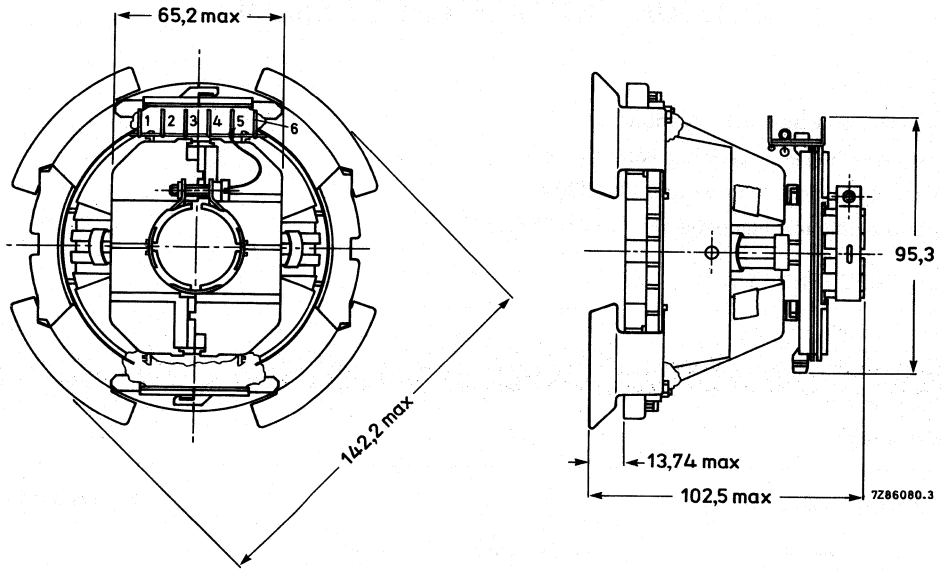

Fig. 2 Deflection unit AT1236/20.

ELECTRICAL DATA OF DEFLECTION UNIT

Line deflection coils	
Inductance	1.91 mH ± 5%
Resistance at 25 °C	1.75 Ω ± 10%
Line deflection current, raster scan, at 25 kV	3.0 A(p-p)
Raster scan	404 mm
Field deflection coils	
Inductance	27.6 mH ± 10%
Resistance at 25 °C	13.2 Ω ± 7%
Field deflection current, raster scan, at 25 kV	0.895 A(p-p)
Raster scan	303 mm

Cross-talk	a voltage of 10 V, 15625 Hz applied to the line coils causes no more than 0.20 V across the field coils (damping resistors included)
Insulation resistance at 1 kV DC	
between line and field coils	> 500 MΩ
between line coil and core clamp	> 500 MΩ
between field coil and core clamp	> 10 MΩ
Maximum operating temperature (average copper temperature)	+90 °C
Storage temperature range	−25 to +90 °C
Flame retardent	according to UL 413, category 94V-1

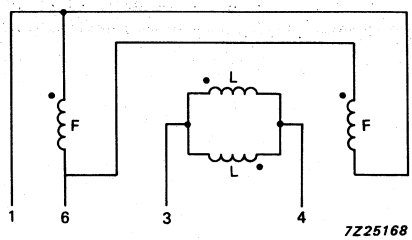

Fig. 3 Connection diagram. L = line coils; F = field coils.

The beginning of the windings is indicated with ●.

ENVIRONMENTAL TEST SPECIFICATIONS OF DEFLECTION UNITS

Vibration	IEC 68-2-6 (test Fc)
Shock	IEC 68-2-27 (test Ea)
Bump	IEC 68-2-29 (test Eb; 25g)
Cold	IEC 68-2-1 (test Ab)
Dry heat	IEC 68-2-2 (test Bb)
Damp heat, steady state	IEC 68-2-3 (test Ca)
Cyclic damp heat	IEC 68-2-30 (test Db)
Change of temperature	IEC 68-2-14 (test Nb)

FLAT SQUARE Hi-Bri COLOUR PICTURE TUBE

- Flat and square screen
- 110° deflection
- Shadow mask of NiFe alloy with low thermal expansion
- In-line, hi-bi potential A R T* gun with quadrupole cathode lens
- 29,1 mm neck diameter
- Mask with corner suspension
- Hi-Bri technology
- Pigmented phosphors
- Quick-heating low-power cathodes
- Soft-flash
- Slotted shadow mask optimized for minimum moiré at 625 lines systems
- Internal magnetic shield
- Internal multipole
- Reinforced envelope for push-through mounting
- Anti-crackle coating

QUICK REFERENCE DATA

Deflection angle	110°
Minimum useful screen diagonal	51 cm
Overall length	36 cm
Neck diameter	29,1 mm
Heating	6,3 V, 310 mA
Anode voltage	25 kV
Focusing voltage	31% of anode voltage

* Aberration Reducing Triode.

ELECTRON-OPTICAL DATA

Electron gun system	unitized triple-aperture electrodes; aberration reducing triode
Focusing method	electrostatic
Focus lens	hi-bi-potential
Deflection method	magnetic
Deflection angles	
diagonal	110°
horizontal	97°
vertical	77°

ELECTRICAL DATA

Capacitances			
anode to external conductive coating including rimband	$C_{a,g5,\ g4/m+m'}$	min.	1600 pF
anode to metal rimband	$C_{a,\ g5,\ g4/m'}$		250 pF
cathodes of all guns (connected in parallel) to all other electrodes	C_k		15 pF
cathode of any gun to all other electrodes	C_{kR}, C_{kG}, C_{kB}		5 pF
grid 3 (focusing electrode) to all other electrodes	C_{g3}		6 pF
grid 1 to all other electrodes	C_{g1}		17 pF
grid 2 to all other electrodes	C_{g2}		4,5 pF
Resistance between rimband and external conductive coating		min.	50 MΩ
Heating: indirect by AC (preferably mains or line frequency) or DC			
heater voltage	V_f		6,3 V
heater current	I_f		310 mA

OPTICAL DATA

Screen	metal-backed vertical phosphor stripes, phosphor lines follow glass contour
Screen finish	high gloss
Useful screen dimensions	
diagonal	min. 508,0 mm
horizontal axis	min. 411,4 mm
vertical axis	min. 310,8 mm
area	min. 1265 cm^2
Positional accuracy of the screen with respect to the glass contour	see Figure on the next page
Phosphors	
red	pigmented europium activated rare earth
green	sulphide type
blue	pigmented sulphide type
Persistence	medium short

A = 171,7 mm
B = 223,7 mm
C = 115,6 mm
D = 173,9 mm
E = 23,5 mm

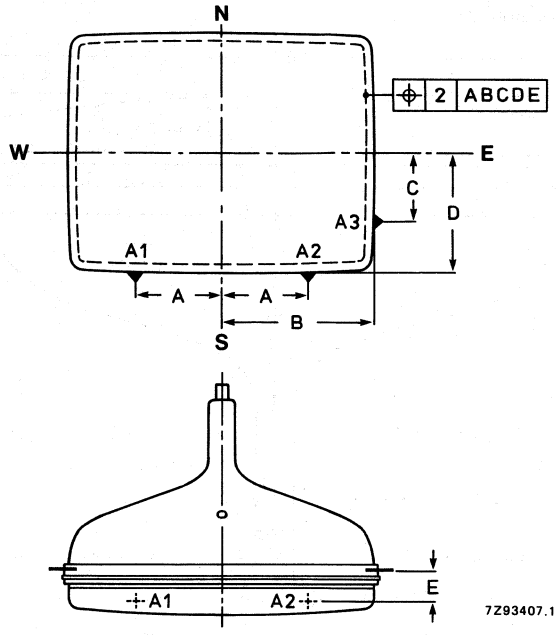

Fig. 1 Tube alignment.

DEVELOPMENT DATA

		x	y
Colour co-ordinates			
red		0,635	0,340
green		0,315	0,600
blue		0,150	0,060
Centre-to-centre distance of identical colour phosphor stripes		approx. 0,6 mm	
Light transmission of face glass at screen centre		52%	
Luminance at the centre of the screen	L	100 cd/m² *	

MECHANICAL DATA (see Figs 2 to 9)

Overall length	362 ± 6 mm
Neck diameter	$29{,}1^{+1{,}4}_{-0{,}7}$ mm
Base	JEDEC B10-277
Anode contact	small cavity contact J1-21, IEC 67-III-2
Mounting position	anode contact on top
Net mass	approx. 15 kg

Handling

During shipment and handling the tube should not be subjected to accelerations greater than 35g in any direction.

* Tube setting adjusted to produce white D (x = 0,313, y = 0,329), focused raster, current density 0,4 μA/cm².

MECHANICAL DATA (continued)

Dimensions in mm

Notes are given after the drawings.

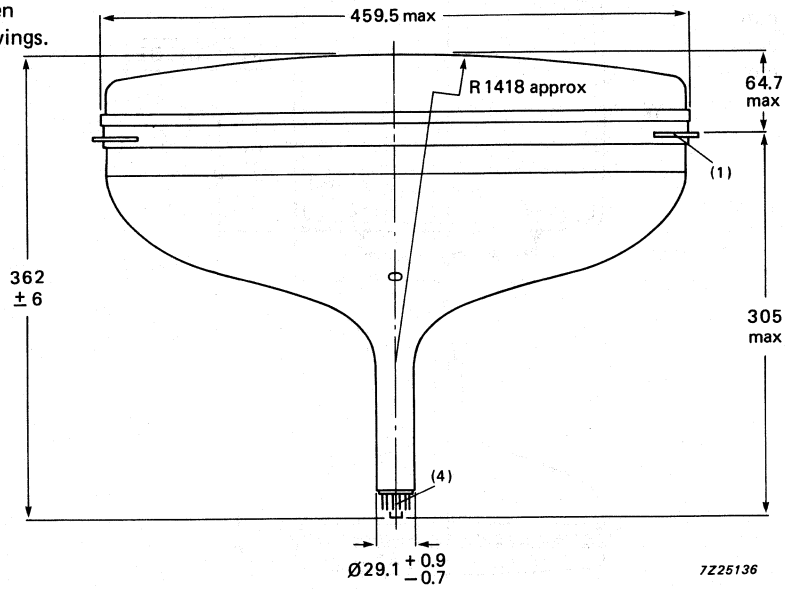

Fig. 2

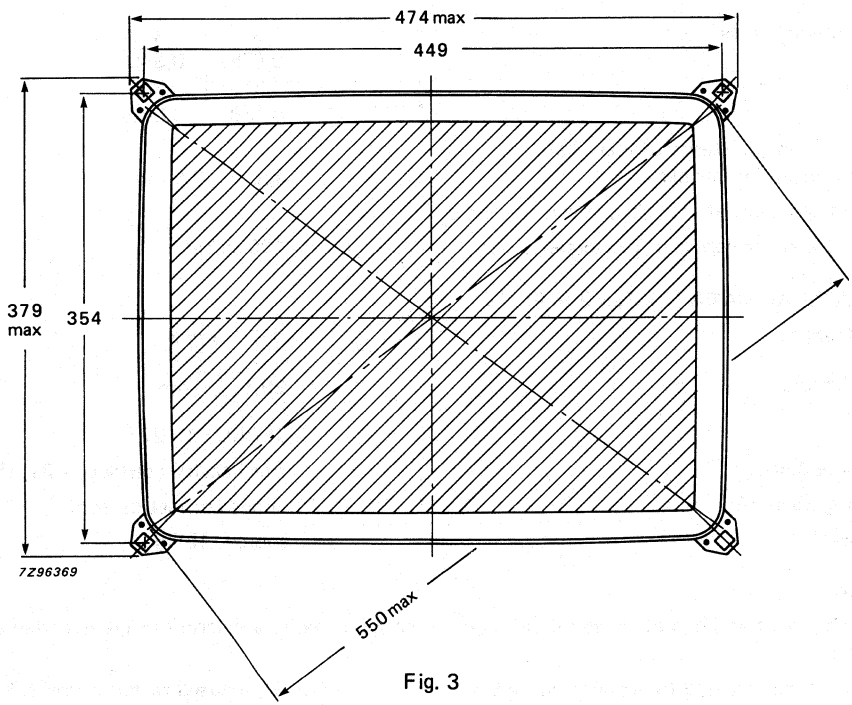

Fig. 3

DEVELOPMENT DATA

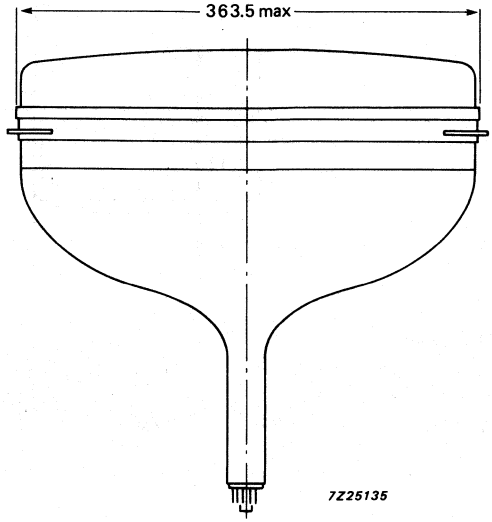

Fig. 4

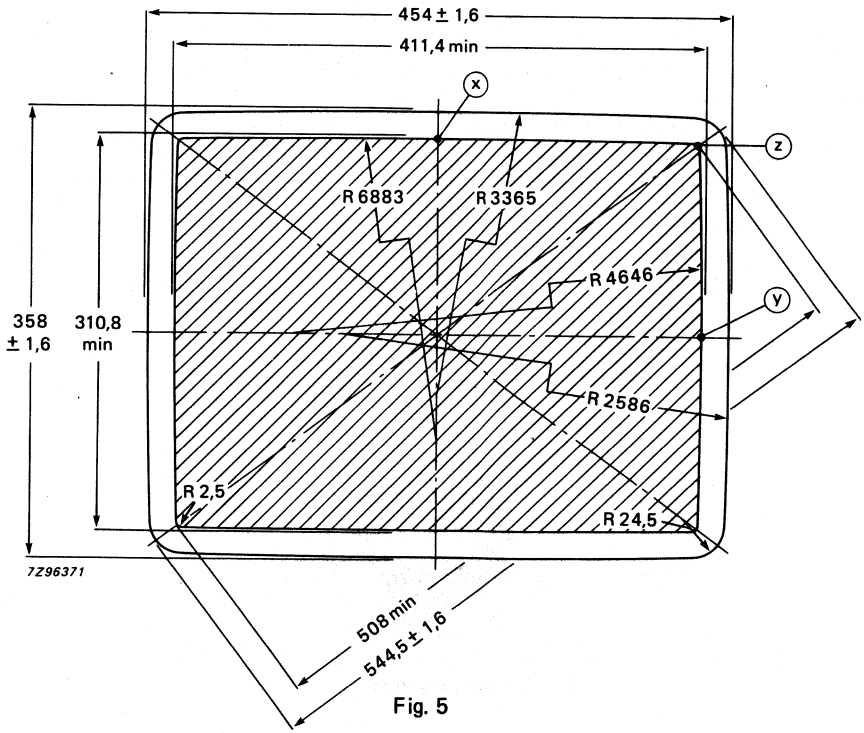

Fig. 5

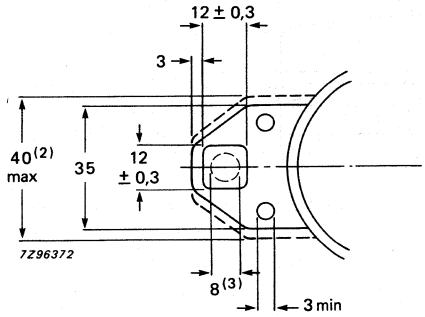

Fig. 6 Lug dimensions.

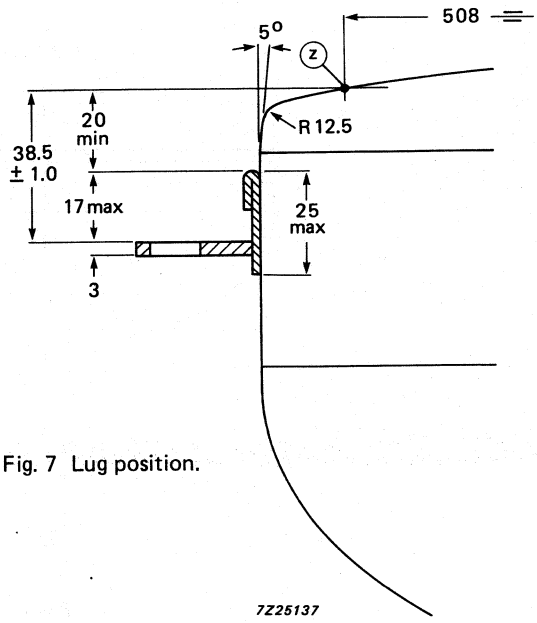

Fig. 7 Lug position.

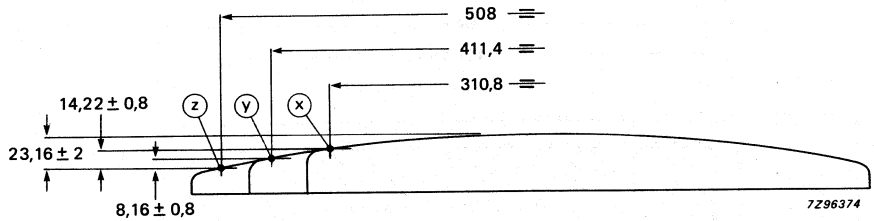

Fig. 8 Screen reference points.

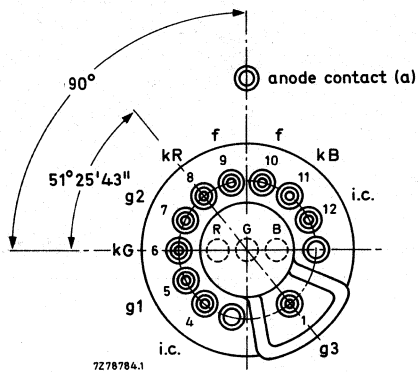

Fig. 9 Pin arrangement.

Notes to outline drawings on the preceding pages

1. The displacement of any lug with respect to the plane through the three other lugs is max. 1,5 mm.
2. Minimum space to be reserved for mounting lug.
3. The position of the mounting screw in the cabinet must be within a circle of 8 mm diameter drawn around the true geometrical positions, i.e. the corners of a rectangle of 449 mm x 354 mm.
4. The socket for this base should not be rigidly mounted; it should have flexible leads and be allowed to move freely. After mounting of the tube in the cabinet note that the position of the base can fall within a circle, having a diameter of max. 50 mm, concentric with an imaginary tube axis.

Table 1 Sagittal heights with reference to screen centre at the edge of the minimum useful screen

coordinates x mm	coordinates y mm	sagittal height mm
0*	155,4	9,0
20	155,4	9,1
40	155,3	9,4
60	155,1	10,1
80	154,9	11,0
100	154,7	12,2
120	154,4	13,7
140	153,9	15,4
160	153,5	17,5
180	153,0	19,9
200	152,5	22,7
203,2**	152,4	23,2
203,3	150	22,9
203,6	140	21,8
204,2	120	19,9
204,6	100	18,4
205,0	80	17,2
205,3	60	16,3
205,5	40	15,6
205,7	20	15,8
205,7▲	0	15,0

DEVELOPMENT DATA

* Point x .
** Diagonal.
▲ Point y .

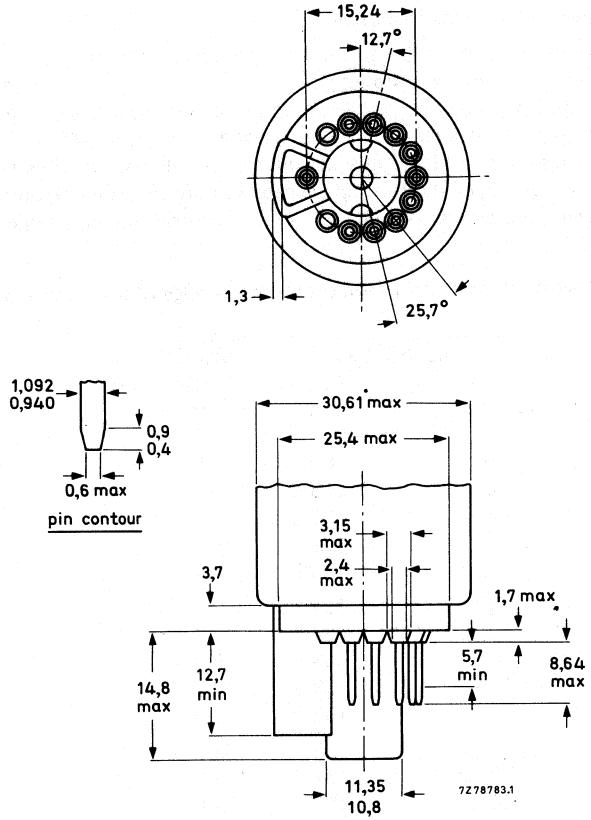

Fig. 10 10-pin base; JEDEC B10-277.

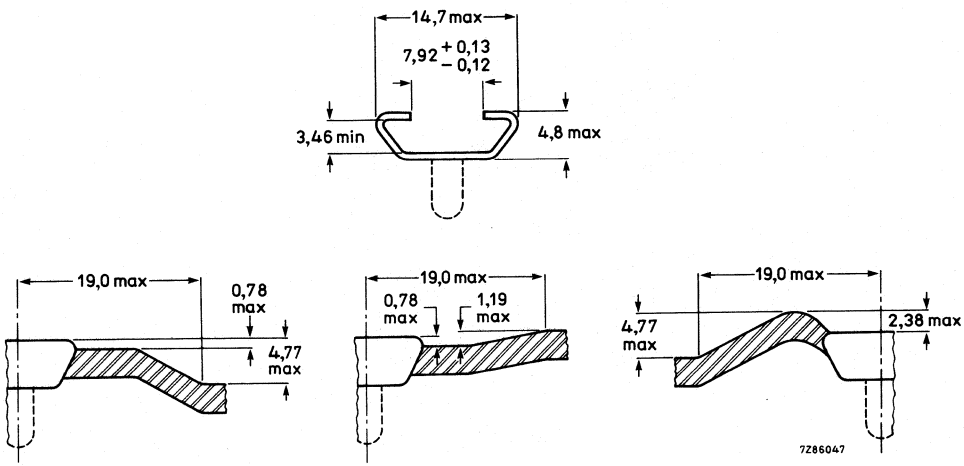

Fig. 11 Cavity cap JEDEC J1-21, IEC 67-III-2.

DEVELOPMENT DATA

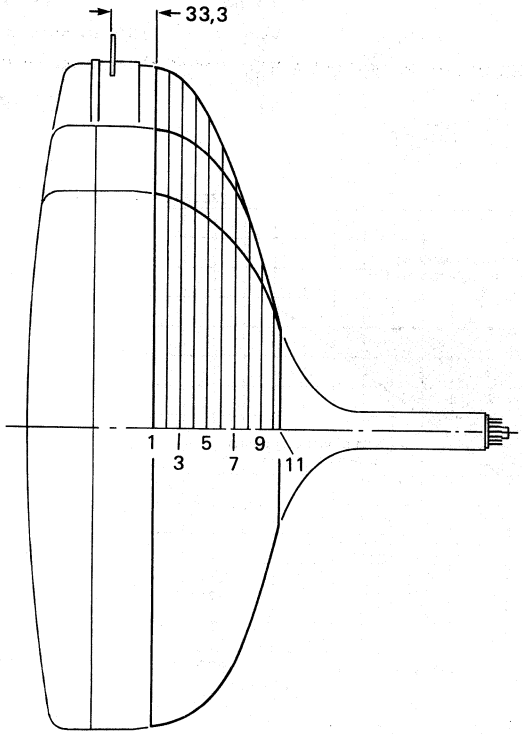

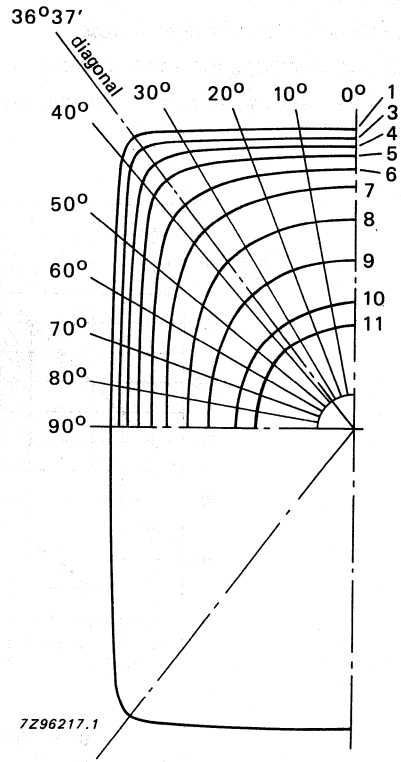

Fig. 12 Maximum cone contour.

Table 2 Cone contour data

section	nom. distance from section 1	distance from centre										
		0°	10°	20°	30°	36,87°	40°	50°	60°	70°	80°	90°
1	0,00	225,8	229,0	239,2	257,7	272,0	267,4	228,1	203,2	188,0	179,7	177,1
2	10,00	224,2	227,4	237,5	255,9	270,0	264,8	226,3	201,7	186,6	178,4	175,8
3	20,00	220,0	223,2	233,1	250,9	263,1	257,1	220,7	196,8	182,1	174,1	171,5
4	30,00	214,0	217,0	226,4	242,8	252,1	246,3	212,9	190,2	176,2	168,5	166,1
5	40,00	206,4	209,2	217,5	231,1	235,3	230,1	202,1	181,4	168,4	161,3	159,0
6	50,00	196,7	198,9	205,4	212,9	211,5	207,4	187,2	169,7	158,2	151,8	149,8
7	60,00	182,2	183,8	187,5	189,1	185,3	182,1	167,9	154,3	144,7	139,2	137,4
8	70,00	158,0	159,1	161,0	160,7	157,7	155,4	146,0	136,2	128,7	124,2	122,7
9	80,00	127,9	128,6	129,8	129,6	128,0	126,8	121,6	115,6	110,4	107,0	105,8
10	90,00	95,2	95,4	95,6	95,1	94,3	93,9	92,0	89,7	87,6	86,0	85,4
11	94,6	75,9	75,8	75,7	75,4	75,1	75,0	74,6	74,2	73,8	73,6	73,5

TYPICAL OPERATING CONDITIONS

The voltages are specified with respect to grid 1.

Anode voltage	$V_{a, g4}$	25 kV
Grid 3 (focusing electrode) voltage	V_{g3}	7,25 to 8,25 kV
Grid 2 voltage for a spot cut-off voltage V_k = 130 V	V_{g2}	see below
Heater voltage under operating conditions	V_f	6,3 V

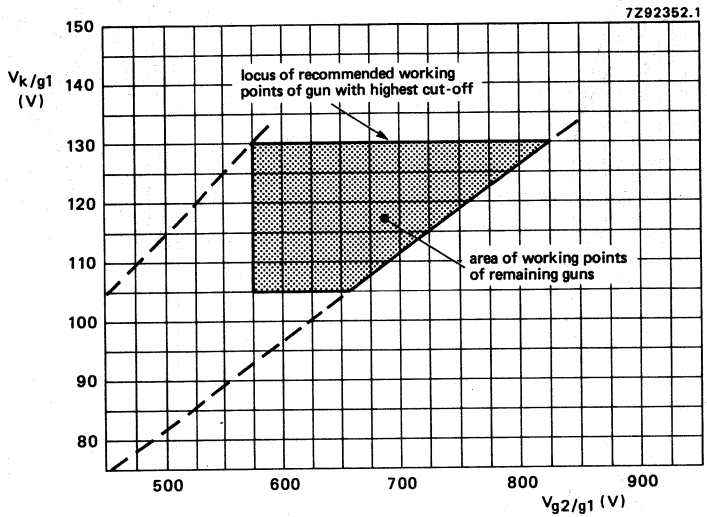

Fig. 13 Spot cut-off design chart.

Grid 2 voltage (V_{g2}) adjusted for highest gun spot cut-off voltage V_k = 130 V.

Remaining guns adjusted for spot cut-off by means of cathode voltage

V_{g2} range 575 to 825 V;

V_k range 105 to 130 V.

Adjustment procedure:

Set the cathode voltage (V_k) for each gun at 130 V; increase the grid 2 voltage (V_{g2}) from approx. 550 V to the value at which one of the colours become just visible. Now decrease the cathode voltage of the remaining guns so that the other colours also become visible.

DEVELOPMENT DATA

EQUIPMENT DESIGN VALUES

The values are valid for anode voltages between 20 and 27,5 kV.
The voltages are specified with respect to grid 1.

Grid 3 (focusing electrode) voltage	V_{g3}		29 to 33% of anode voltage
Grid 2 voltage and cathode voltage for visual extinction of focused spot	V_{g2} and V_k		see spot cut-off design chart
Difference in cut-off voltages between guns in any tube	ΔV_k		lowest value > 80% of highest value
Heater voltage	V_f		6,3 V at zero beam current
Video drive characteristics			see graphs*
Grid 3 (focusing electrode) current	I_{g3}		−2 to + 2 μA
Grid 2 current	I_{g2}		−2 to + 2 μA
Grid 1 current under cut-off conditions	I_{g1}		−2 to + 2 μA
To produce white of 6500K + 7 M.P.C.D. (CIE co-ordinates x = 0,313, y = 0,329)			
Percentage of the total anode current supplied by each gun (typical)			
red gun			38,3%
green gun			35,8%
blue gun			25,9%
Ratio of anode currents			
red gun to green gun		min.	0,8
		average	1,1
		max.	1,4
red gun to blue gun		min.	1,1
		average	1,5
		max.	1,9
blue gun to green gun		min.	0,5
		average	0,7
		max.	1,0
Insulation resistance between each cathode and grid 1 and heater		min.	50 MΩ

* For optimum picture performance it is recommended that the cathodes are not driven below + 1 V.

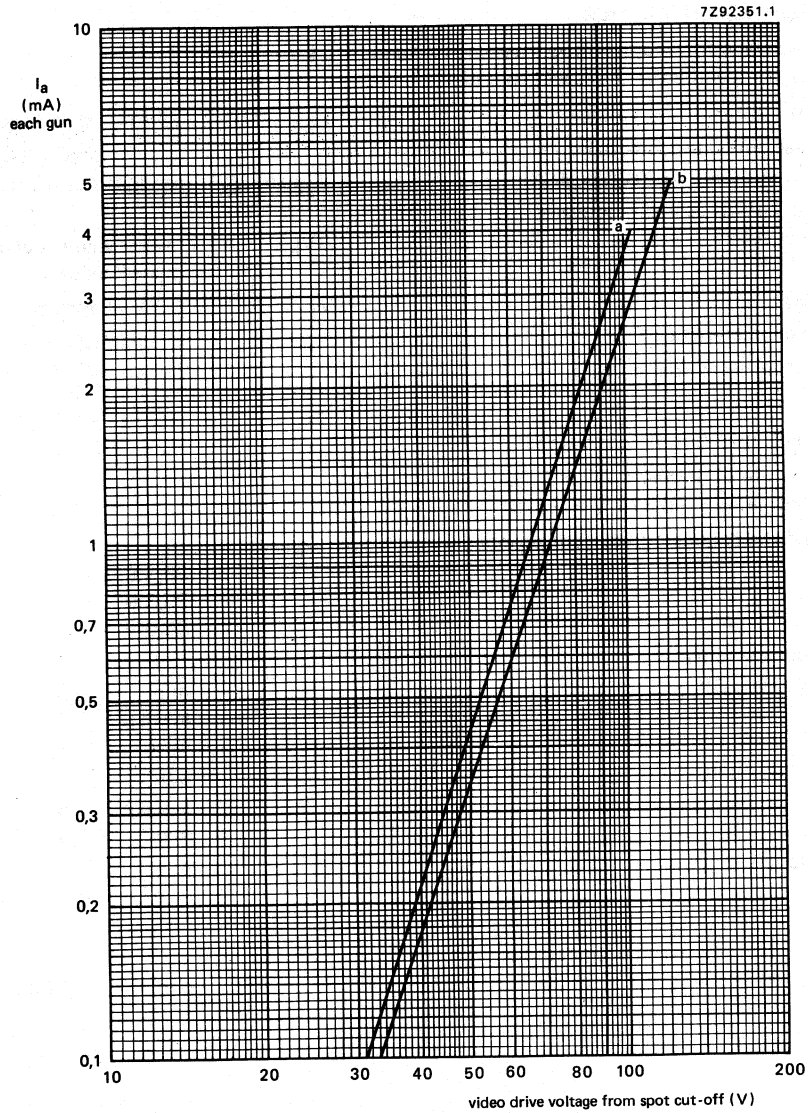

Fig. 14 Typical cathode drive characteristics.

V_f = 6,3 V;
$V_{a, g4}$ = 25 kV;
V_{g3} adjusted for focus;
V_{g2} (each gun) adjusted to provide spot cut-off for V_k = 105 V (curve a) and V_k = 130 V (curve b).

DEVELOPMENT DATA

LIMITING VALUES (Design maximum rating system unless otherwise stated)

The voltages are specified with respect to grid 1.

				notes
Anode voltage	$V_{a,g4}$	max.	27,5 kV	1, 2, 3
		min.	20 kV	1, 4
Long-term average current for three guns	I_a	max.	1000 μA	5
Grid 3 (focusing electrode) voltage	V_{g3}	max.	11 kV	
Grid 2 voltage	V_{g2}	max.	1200 V	6
Cathode voltage				
positive	V_k	max.	400 V	
positive operating cut-off	V_k	max.	200 V	
negative	$-V_k$	max.	0 V	
negative peak	$-V_{kp}$	max.	2 V	
Cathode to heater voltage				
positive	V_{kf}	max.	250 V	
positive peak	V_{kfp}	max.	300 V	1
negative	$-V_{kf}$	max.	135 V	
negative peak	$-V_{kfp}$	max.	180 V	1
Heater voltage	V_f		6,3 V $^{+5\ \%}_{-10\ \%}$	1, 7

LIMITING CIRCUIT VALUES

Grid 3 circuit resistance	R_{g3}	max.	70 MΩ	
Grid 1 to cathode circuit resistance (each gun)	R_{g1k}	max.	0,75 MΩ	

BEAM CENTRING

Maximum centring error in any direction			3 mm	

Notes

1. Absolute maximum rating system.
2. The picture tube does not emit X-radiation above 1 μSv/h when operated within its absolute maximum ratings.
3. During adjustment on the production line this value is likely to be surpassed considerably. It is therefore strongly recommended to first make the necessary adjustments for normal operation without picture tube.
4. Operating of the tube at lower voltages impairs the luminance and resolution, and could impair convergence.
5. The short-term average anode current should be limited by circuitry to 1500 μA.
6. During adjustment on the production line max. 1500 V is permitted.
7. For maximum cathode life it is recommended that the heater supply be designed for 6,3 V at zero beam current.

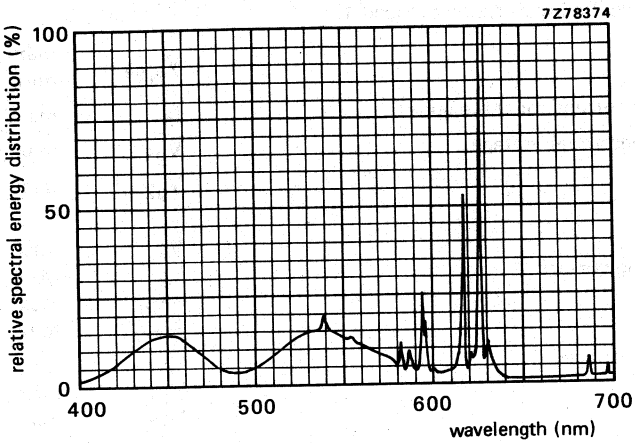

Fig. 15 Simultaneously excitation of red, green and blue phosphor, measured in a tube, to produce white of x = 0,313, y = 0,329. Exact shape of the peaks depends on the resolution of the measuring apparatus.

Colour co-ordinates:	x	y
red	0,635	0,340
green	0,315	0,600
blue	0,150	0,060

DEGAUSSING

The picture tube is provided with an internal magnetic shield. This shield and the shadow mask with its suspension system may be provided with an automatic degaussing system, consisting of one magnetic coil winding mounted on the cone of the picture tube.

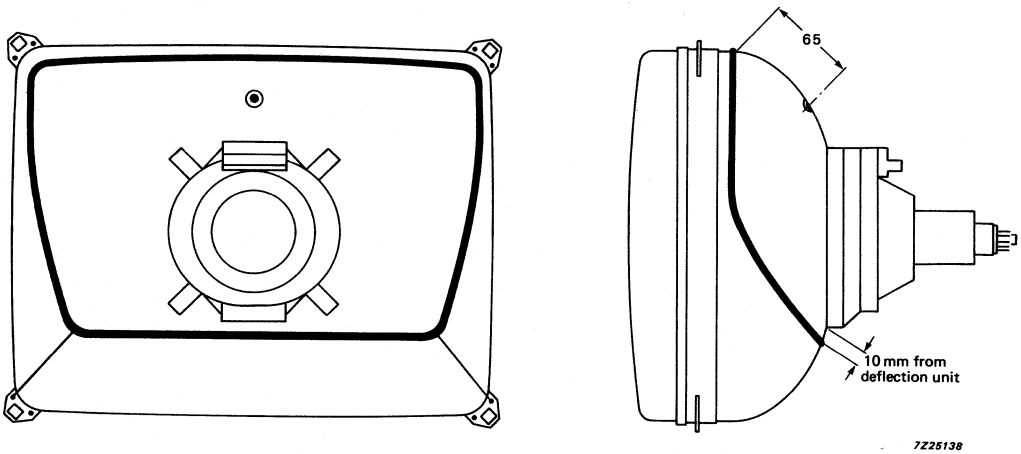

Fig. 16 Position of degaussing coil on the picture tube.

For proper degaussing, an initial magnetomotive force (MMF) of 700 ampere turns is required in the coil. This MMF has to be gradually decreased by appropriate degaussing circuitry. In the steady state, no sifnificant MMF should remain in the coil ($\leqslant 0.35$ ampere-turns). If single-phase power rectification is employed in the TV circuitry, provision should be included to prevent asymmetric distortion of the AC voltage applied to the degaussing circuit due to high DC inrush currents.

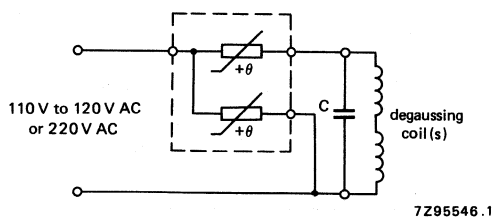

Fig. 17 Degaussing circuit using dual PTC thermistor.

Data of degaussing coil

	single-coil system
Circumference	139 cm
Number of turns	140
Copper wire diameter	0.4 mm
Aluminium wire diameter	0.5 mm
Resistance	27 Ω
Catalogue number of appropriate dual PTC thermistor	2322 662 98009

110° FLAT SQUARE COLOUR PICTURE TUBE ASSEMBLY

- Factory preset tube/coil assembly
- Self-converging and north-south raster correction free
- 51 cm, 110° colour picture tube A51EAK01X
- Double saddle deflection unit AT6020

QUICK REFERENCE DATA

Deflection angle	110°
Minimum useful screen diagonal	51 cm
Overall length	36 cm
Neck diameter	29,1 mm

MECHANICAL DATA

Dimensions in mm

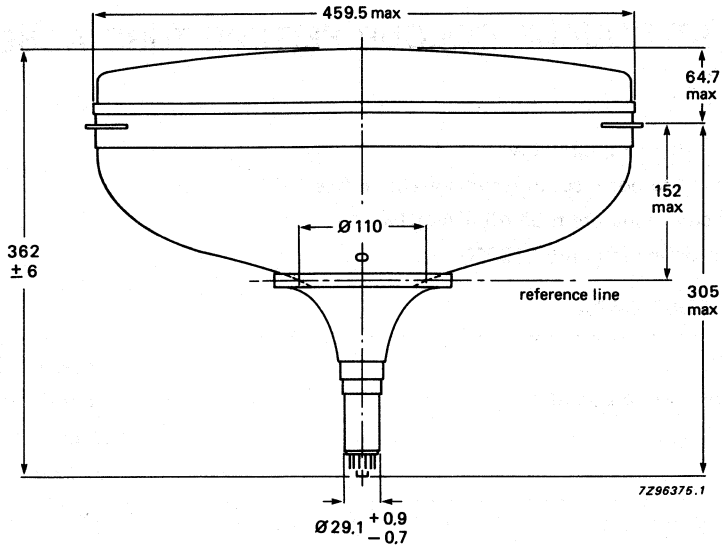

Net mass of tube assembly: 16 kg

Fig. 1 Tube assembly.

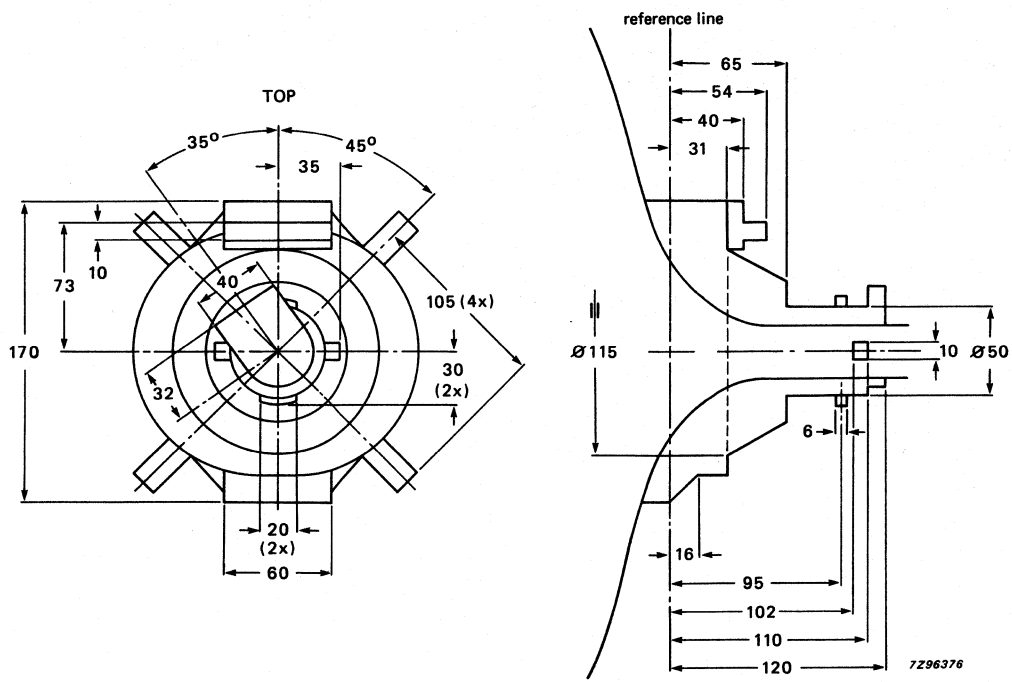

Fig. 2 Yoke clearance.

ELECTRICAL DATA OF DEFLECTION UNIT

Line coils	parallel connected
Inductance at 1 V (rms), 1 kHz	2,03 mH
Resistance at 25 °C	2,0 Ω
Magnetic flux	7,9 mWb ± 5%
Line deflection current, edge to edge, at 25 kV	3,88 A (p-p)
Field coils	series connected
Inductance at 1 V (rms), 1 kHz	11,7 mH
Resistance at 25 °C	6,0 Ω
Field deflection current, edge to edge, at 25 kV	1,77 A (p-p)

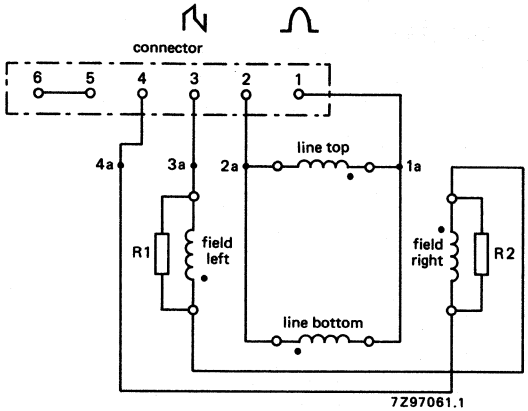

Fig. 3 Electrical diagram

The beginning of the windings is indicated with ●.
R1 = R2 = 100 Ω, 0,25 W.
Matching Stocko connector MKF 2806-1-0-606.

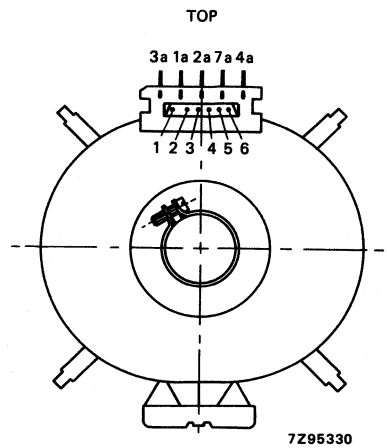

Fig. 4 Terminal location.

DEVELOPMENT DATA

FLAT SQUARE Hi-Bri COLOUR PICTURE TUBE

- Flat and square screen
- 90° deflection
- In-line, hi-bi potential A R T* gun
- 29,1 mm neck diameter
- Mask with corner suspension
- Hi-Bri technology
- Pigmented phosphors
- Quick-heating low-power cathodes
- Soft flash
- Slotted shadow mask optimized for minimum moiré at 625 lines system
- Internal magnetic shield
- Internal multipole
- Reinforced envelope for push-through mounting
- The tube is supplied with a matched hybrid saddle toroidal deflection unit of the AT6035 series; it forms a self-converging and raster correction free assembly

QUICK REFERENCE DATA

Deflection angle	90°
Minimum useful screen diagonal	51 cm
Overall length	444 mm
Neck diameter	29,1 mm
Heating	6,3 V, 310 mA
Anode voltage	25 kV
Focusing voltage	31% of anode voltage

* Aberration Reducing Triode.

ELECTRON-OPTICAL DATA

Electron gun system		unitized triple-aperture electrodes; aberration reducing triode
Focusing method		electrostatic
Focus lens		hi-bi-potential
Deflection method		magnetic
Deflection angles		
diagonal		approx. 90°
horizontal		approx. 78°
vertical		approx. 60°

ELECTRICAL DATA

capacitances		
anode to external conductive coating including rimband	$C_a(m + m')$	> 1600 pF
grid 1 to all other electrodes	C_{g1}	17 pF
cathode of each gun to all other electrodes	C_{kR}, C_{kG}, C_{kB}	5 pF
focusing electrode to all other electrodes	C_{g3}	6 pF
Heating		indirect by AC or DC
heater voltage	V_f	6,3 V
heater current	I_f	310 mA

OPTICAL DATA

Screen		metal-backed vertical phosphor stripes; phosphor lines follow glass contour
Screen finish		high gloss
Useful screen dimensions		
diagonal		min. 508,0 mm
horizontal axis		min. 411,4 mm
vertical axis		min. 310,8 mm
area		min. 1265 cm²
Positional accuracy of the screen with respect to the glass contour		see Figure on the next page
Phosphors		
red		pigmented europium activated rare earth
green		sulphide type
blue		pigmented sulphide type
Centre-to-centre distance of vertical identical colour phosphor stripes, at screen centre		approx. 0,75 mm
Light transmission of face glass at centre		64,4%
→ Luminance at the centre of the screen	L	120 cd/m² *

* Tube settings adjusted to produce white D (x = 0,313, y = 0,329), focused raster, current density 0,4 μA/cm².

A = 171,7 mm
B = 223,7 mm
C = 115,6 mm
D = 173,9 mm
E = 23,5 mm

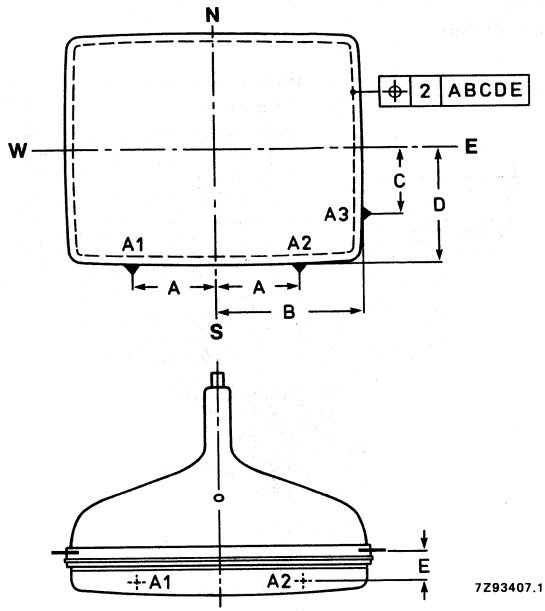

Fig. 1 Tube alignment.

MECHANICAL DATA (see also Figs 2 to 10)

Overall length	443,7 ± 5 mm
Neck diameter	$29{,}1\ ^{+\ 1{,}4}_{-\ 0{,}7}$ mm*
Bulb dimensions	
diagonal	max. 546,1 mm
width	max. 455,6 mm
height	max. 359,6 mm
Base	JEDEC B10-277
Anode contact	small cavity contact J1-21, IEC 67-III-2
Mounting position	anode contact on top

Handling

During shipment and handling the tube should not be subjected to accelerations greater than 35g in any direction.

* In the region of 78,5 mm from the neck end, the maximum diameter is 30 mm.

MECHANICAL DATA (continued)

Dimensions in mm

Notes are given after the drawings

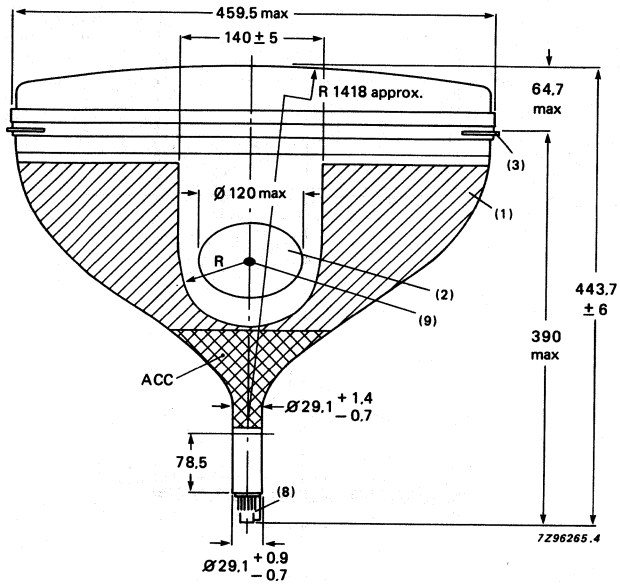

Fig. 2.

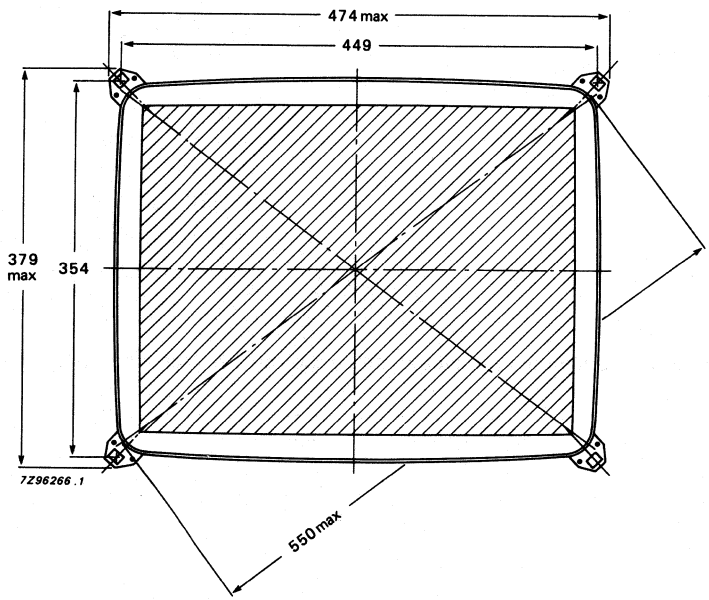

Fig. 3.

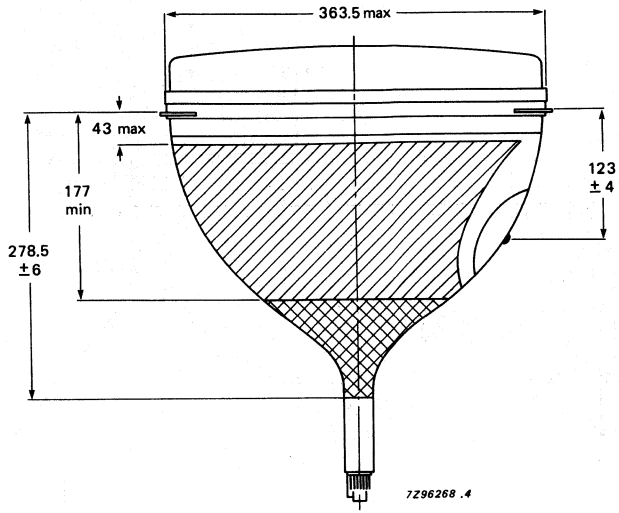
363.5 max
43 max
177
min
278.5
±6
123
±4
7Z96268 .4

Fig. 4.

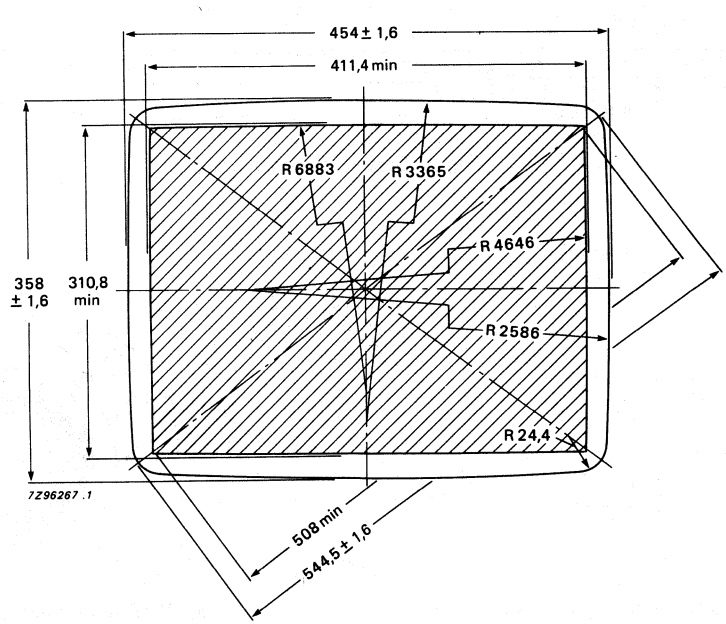
454 ± 1,6
411,4 min
R 6883
R 3365
R 4646
R 2586
R 24,4
358
±1,6
310,8
min
7Z96267 .1
508 min
544,5 ± 1,6

Fig. 5.

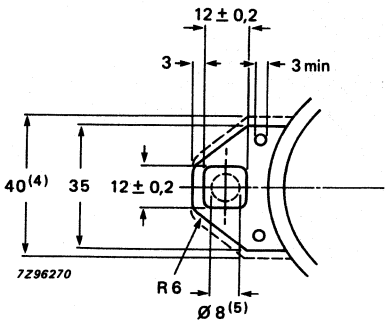

Fig. 6 Lug dimensions.

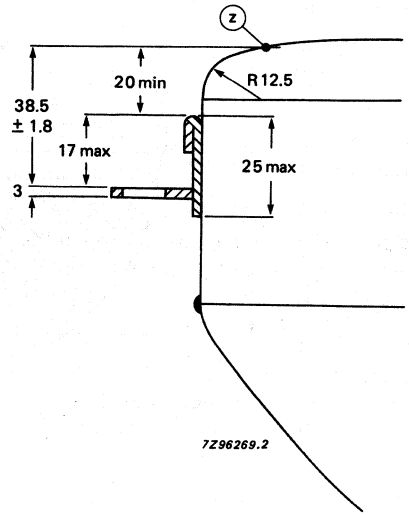

Fig. 7 Lug position.

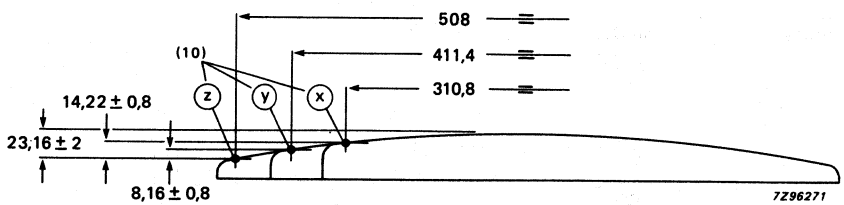

Fig. 8 Screen reference points.

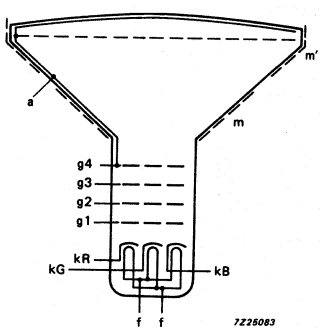

Fig. 9 Electrode configuration.

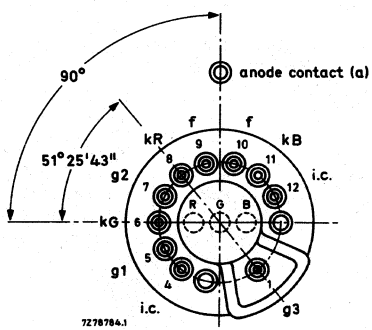

Fig. 10 Pin arrangement.

i.c. = internally connected (not to be used)

Notes to outline drawings

1. Configuration of outer conductive coating may be different but will contain the contact area as shown in the drawing.
2. To clean this area, wipe only with a soft lintless cloth.
3. The displacement of any lug with respect to the plane through the three other lugs is max. 1,3 mm. This deviation is incorporated in the tolerance of ± 1,8 mm.
4. Minimum space to be reserved for mounting lug.
5. The position of the mounting screw in the cabinet must be within a circle of 8 mm diameter drawn around the true geometrical positions, i.e. the corners of a rectangle of 354 x 449 mm.
6. Not applicable.
7. Not applicable.
8. The socket for this base should not be rigidly mounted; it should have flexible leads and be allowed to move freely. After mounting of the tube in the cabinet note that the position of the base can fall within a circle, having a diameter of max. 50 mm (1,968 in), concentric with an imaginary tube axis.
9. Small cavity contact J1-21, IEC 67-III-2.
10. The X, Y and Z reference points are located on the outside surface of the face plate at the intersection of the minor, major and diagonal screen axis respectively, with the minimum published screen.

Table 1 Sagittal heights with reference to screen centre at the edge of the minimum useful screen

coordinates x mm	coordinates y mm	sagittal height mm
0*	155,4	9,0
20	155,4	9,1
40	155,3	9,4
60	155,1	10,1
80	154,9	11,0
100	154,7	12,2
120	154,4	13,7
140	153,9	15,4
160	153,5	17,5
180	153,0	19,9
200	152,5	22,7
203,2**	152,4	23,2
203,3	150	22,9
203,6	140	21,8
204,2	120	19,9
204,6	100	18,4
205,0	80	17,2
205,3	60	16,3
205,5	40	15,6
205,7	20	15,8
205,7▲	0	15,0

* Point (x).
** Diagonal.
▲ Point (y).

10-pin base; JEDEC B10-277

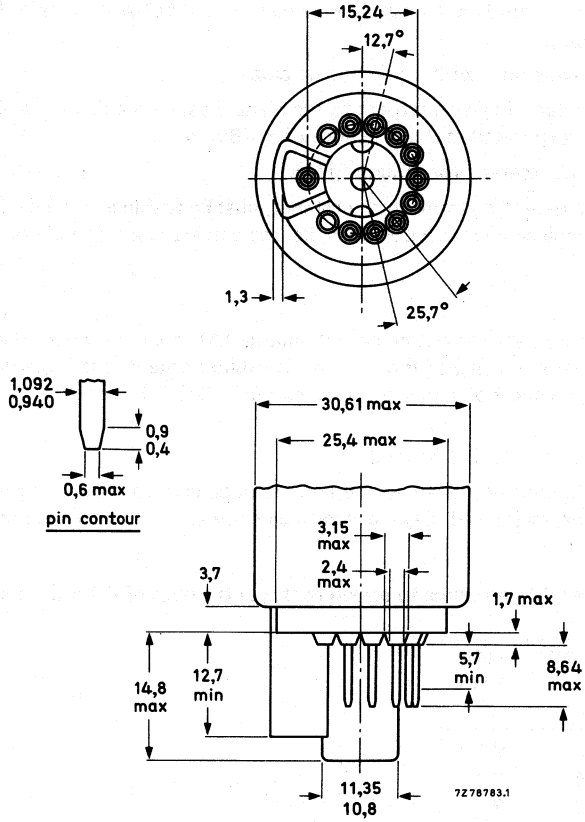

Fig. 11 JEDEC base.

Cavity cap JEDEC J1-21, IEC 67-III-2

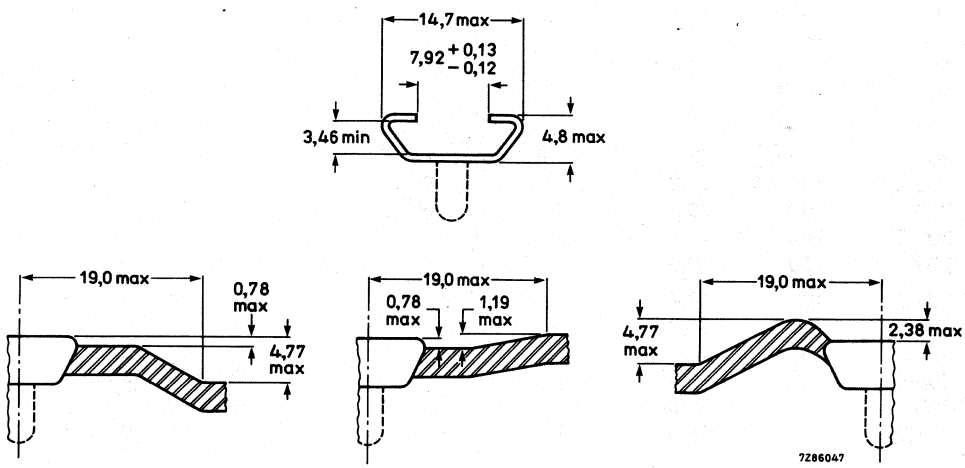

Fig. 12 Cavity cap.

Maximum cone contour

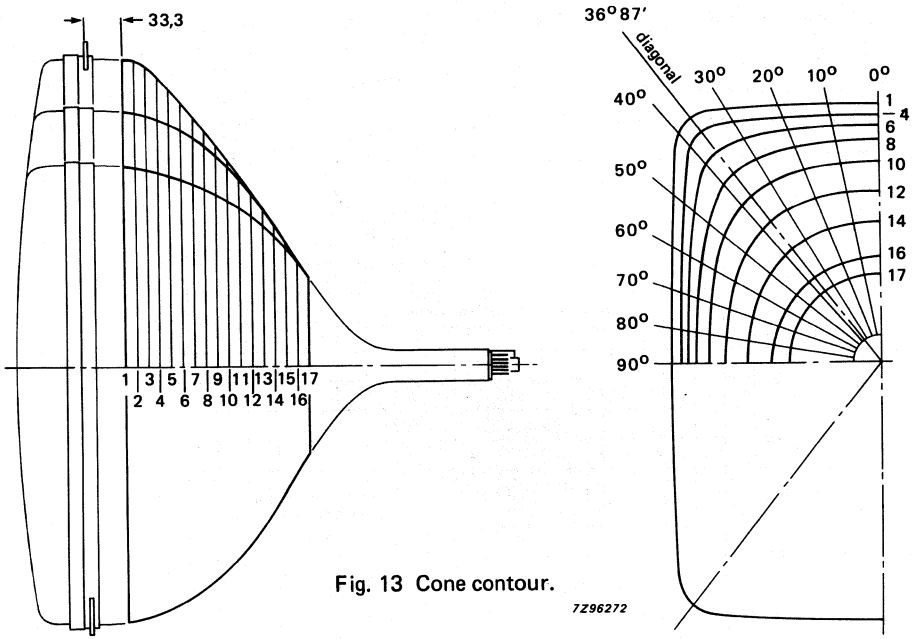

Fig. 13 Cone contour.

Dimensions in mm

Table 2 Cone contour data

section	nom. distance from section 1	max. distance from centre										
		0°	10°	20°	30°	diag.	40°	50°	60°	70°	80°	90°
1	0	225,7	228,9	239,1	257,6	271,8	267,2	227,9	203,1	187,9	179,6	177,0
2	10	224,6	227,7	237,7	255,9	270,0	265,3	226,7	201,9	186,8	178,6	175,9
3	20	221,8	224,8	234,3	251,1	264,3	259,6	222,9	198,9	184,2	176,1	173,5
4	30	218,1	220,9	229,6	244,5	254,7	250,6	217,9	195,1	180,9	173,1	170,6
5	40	213,8	216,4	224,1	236,5	243,1	239,6	212,0	190,9	177,3	169,9	167,5
6	50	208,7	211,0	217,7	227,5	231,3	228,4	205,6	186,3	173,6	166,5	164,2
7	60	202,6	204,5	210,0	217,5	219,5	217,0	198,5	181,0	169,3	162,6	160,5
8	70	195,1	196,8	201,3	206,9	207,6	205,4	190,3	175,1	164,4	158,3	156,3
9	80	186,2	187,6	191,4	195,6	195,4	193,5	181,3	168,4	158,9	153,3	151,5
10	90	175,6	176,9	180,1	183,3	182,8	181,1	171,4	160,7	152,5	147,6	146,0
11	100	163,6	164,6	167,4	169,9	169,2	167,9	160,4	151,9	145,2	141,0	139,6
12	110	150,3	151,3	153,8	155,7	154,7	153,6	147,9	141,7	136,6	133,4	132,3
13	120	136,4	137.3	139,3	140,4	139,5	138,6	134,5	130,3	126,8	124,6	123,9
14	130	122,1	122,8	124,4	124,9	124,0	123,3	120,7	118,2	116,1	114,7	114,3
15	140	107,5	107,7	108,2	108,6	108,4	108,2	107,0	105,7	104,5	103,8	103,5
16	150	92,6	92,3	92,3	92,6	92,8	92,9	92,9	92,6	92,1	91,6	91,4
17	159,5	78,1	78,1	78,1	78,1	78,1	78,1	78,1	78,1	78,1	78,1	78,1

TYPICAL OPERATING CONDITIONS

The voltages are specified with respect to grid 1.

Anode voltage	$V_{a,g4}$	25 kV
Grid 3 (focusing electrode) voltage	V_{g3}	7,25 to 8,25 kV
Grid 2 voltage for a spot cut-off voltage V_k = 130 V	V_{g2}	see below
Heater voltage under operating conditions	V_f	6,3 V

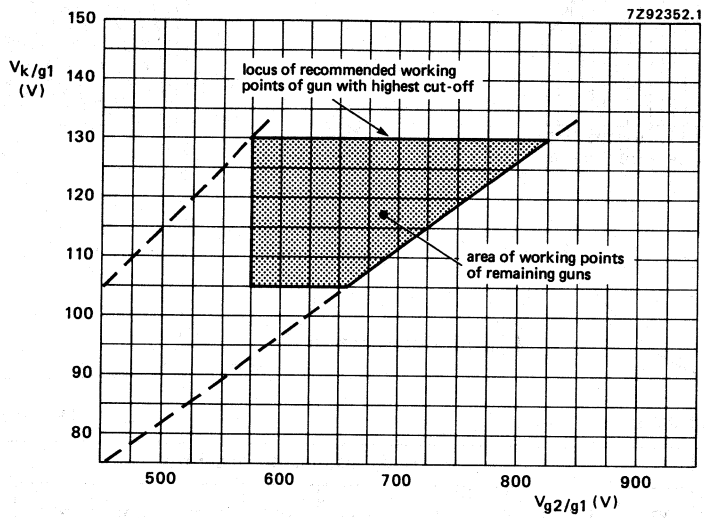

Fig. 14 Spot cut-off design chart.

Grid 2 voltage (V_{g2}) adjusted for highest gun spot cut-off voltage V_k = 130 V.

Remaining guns adjusted for spot cut-off by means of cathode voltage

V_{g2} range 575 to 825 V;

V_k range 105 to 130 V.

Adjustment procedure:

Set the cathode voltage (V_k) for each gun at 130 V; increase the grid 2 voltage (V_{g2}) from approx. 650 V to the value at which one of the colours become just visible. Now decrease the cathode voltage of the remaining guns so that the other colours also become visible.

EQUIPMENT DESIGN VALUES

The values are valid for anode voltages between 20 and 27,5 kV.
The voltages are specified with respect to grid 1.

Grid 3 (focusing electrode) voltage	V_{g3}	29 to 33% of anode voltage
Grid 2 voltage and cathode voltage for visual extinction of focused spot	V_{g2} and V_k	see Fig. 14
Difference in cut-off voltages between guns in any tube	ΔV_k	lowest value > 80% of highest value
Heater voltage	V_f	6,3 V at zero beam current
Video drive characteristics		see graphs*
Grid 3 (focusing electrode) current	I_{g3}	−2 to + 2 μA
Grid 2 current	I_{g2}	−2 to + 2 μA
Grid 1 current under cut-off conditions	I_{g1}	−2 to + 2 μA

To produce white of 6500K + 7 M.P.C.D.
(CIE co-ordinates x = 0,313, y = 0,329)

Percentage of the total anode current supplied by each gun (typical)

red gun	38,3%
green gun	35,8%
blue gun	25,9%

Ratio of anode currents

red gun to green gun	min.	0,8
	average	1,1
	max.	1,4
red gun to blue gun	min.	1,1
	average	1,5
	max.	1,9
blue gun to green gun	min.	0,5
	average	0,7
	max.	0,9

Insulation resistance between each cathode and grid 1 and heater: min. 100 MΩ

* For optimum picture performance it is recommended that the cathodes are not driven below + 1 V.

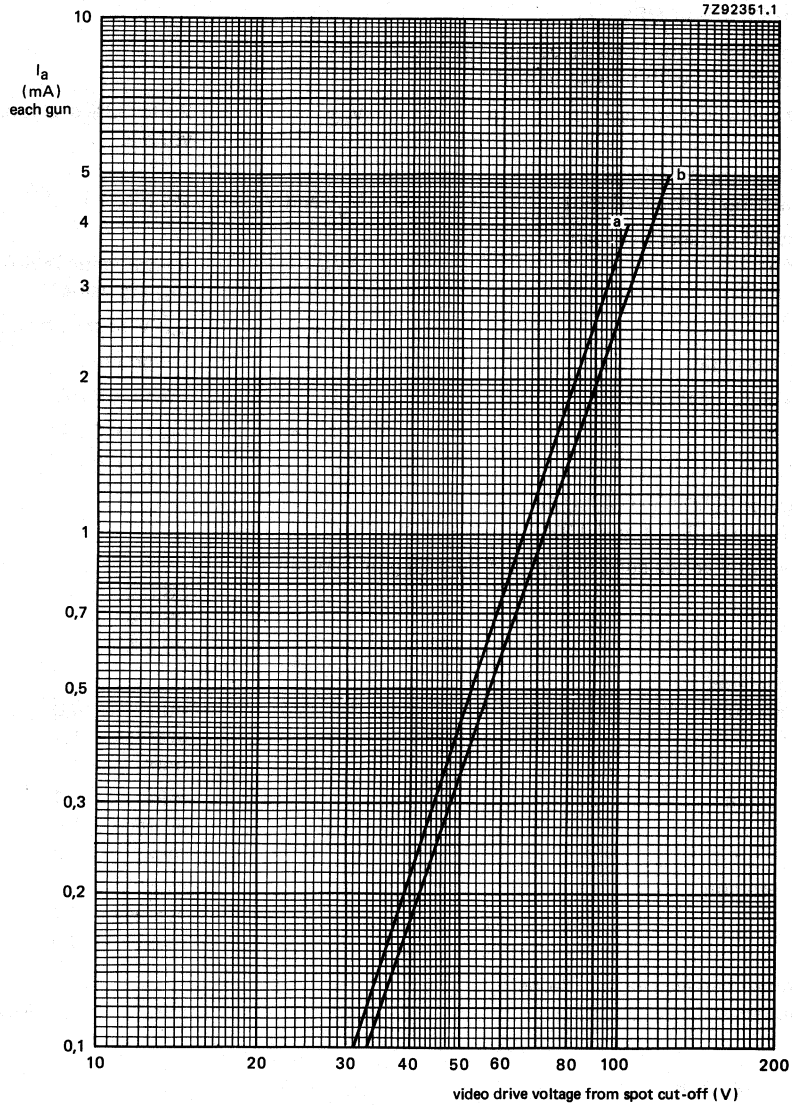

Fig. 15 Typical cathode drive characteristic.

V_f = 6,3 V;

$V_{a,g4}$ = 25 kV;

V_{g3} adjusted for focus;

V_{g2} (each gun) adjusted to provide spot cut-off for V_k = 105 V (curve a) and V_k = 130 V (curve b).

LIMITING VALUES (Design maximum rating system unless otherwise specified)

The voltages are specified with respect to grid 1.

				notes
Anode voltage	$V_{a,g4}$	max.	27,5 kV	1, 2, 3
		min.	20 kV	1, 4
Long-term average current for three guns	I_a	max.	1000 μA	5
Grid 3 (focusing electrode) voltage	V_{g3}	max.	11 kV	
Grid 2 voltage, peak	V_{g2p}	max.	1200 V	6
Cathode voltage				
positive	V_k	max.	400 V	
positive operating cut-off	V_k	max.	200 V	
negative	$-V_k$	max.	0 V	
negative peak	$-V_{kp}$	max.	2 V	
Cathode to heater voltage				
positive	V_{kf}	max.	250 V	
positive peak	V_{kfp}	max.	300 V	1
negative	$-V_{kf}$	max.	135 V	
negative peak	$-V_{kfp}$	max.	180 V	1
Heater voltage	V_f		6,3 V $^{+5\ \%}_{-10\ \%}$	1, 7

LIMITING CIRCUIT VALUES

Grid 3 circuit resistance	R_{g3}	max.	70 MΩ	
Grid 1 to cathode circuit resistance (each gun)	R_{g1k}	max.	0,75 MΩ	

Notes to the limiting values

1. Absolute maximum rating system.
2. The picture tube does not emit X-radiation above 1 μSv/h when operated within its absolute maximum ratings.
3. During adjustment on the production line this value is likely to be surpassed considerably. It is therefore strongly recommended to first make the necessary adjustments for normal operation without picture tube.
4. Operation of the tube at lower voltages impairs the luminance and resolution, and could impair convergence.
5. The short-term average anode current should be limited by circuitry to 1500 μA.
6. During adjustment on the production line max. 1500 V is permitted.
7. For maximum cathode life it is recommended that the heater supply be designed for 6,3 V at zero beam current.

FLASHOVER PROTECTION

With the high voltage used with this tube (max. 27,5 kV) internal flashovers may occur. As a result of the Soft-Flash technology these flashover currents are limited to approx. 60 A offering higher set reliability, optimum circuit protection and component savings.
Primary protective circuitry using properly grounded spark gaps and series isolation resistors (preferably carbon composition) is still necessary to prevent tube damage. The spark gaps should be connected to all picture tube electrodes at the socket according to the figure below; they are not required on the heater pins. No other connections between the outer conductive coating and the chassis are permissible.
The spark gaps should be designed for a breakdown voltage at the focusing electrode (g3) of 11,5 kV (1,5 x V_{g3} max. at $V_{a,g4}$ = 25 kV), and at the other electrodes of 1,5 to 2 kV.
The values of the series isolation resistors should be as high as possible (min. 1,5 kΩ) without causing deterioration of the circuit performance. The resistors should be able to withstand an instantaneous surge of 20 kV for the focusing circuit and 12 kV for the remaining circuits without arcing.
Additional information is available on request.

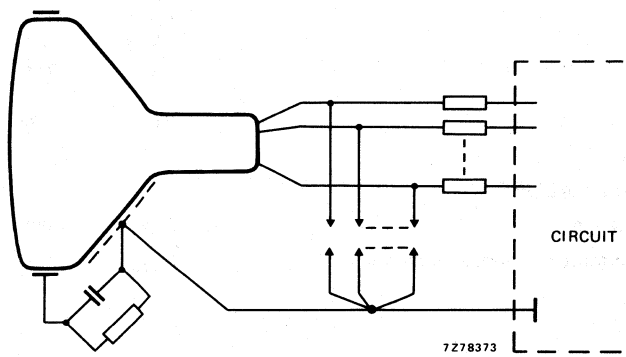

Fig. 16 Flashover protection circuit.

BEAM CORRECTIONS

Maximum centring error in any direction after colour purity, static convergence, and horizontal centre line correction, measured with deflection coils in nominal position	4 mm

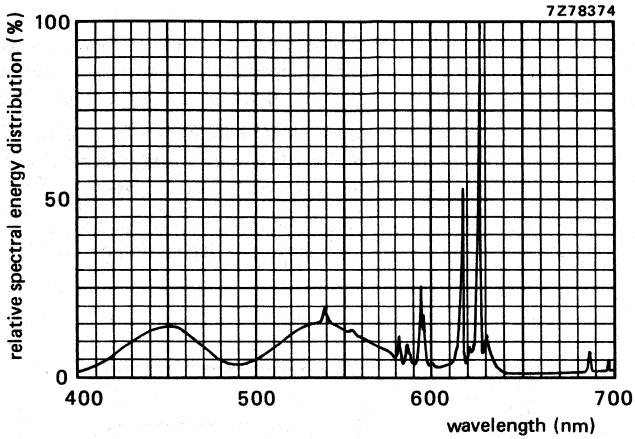

Fig. 17 Simultaneous excitation of red, green and blue phosphor, measured in a tube, to produce white of x = 0,313, y = 0,329. Exact shape of the peaks depends on the resolution of the measuring apparatus.

Colour co-ordinates:	x	y
red	0,635	0,340
green	0,315	0,600
blue	0,150	0,060

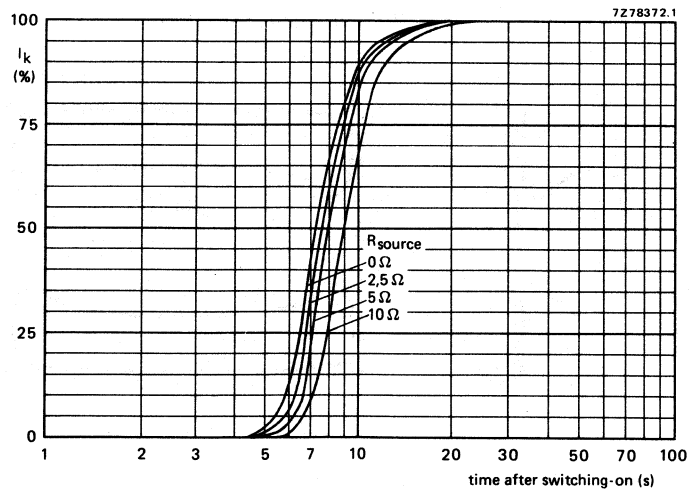

Fig. 18 Cathode heating time after switching on, measured under typical operating conditions.

DEGAUSSING

The picture tube has an internal magnetic shield. This shield and the shadow mask with its suspension system may be provided with an automatic degaussing system. Three degaussing systems are available, double-coil, continuous-coil and single-coil, these are shown in Figs 19, 20 and 21.

For proper degaussing an initial magnetomotive force (MMF) of 300 ampere-turns* is required in each of the coils. This MMF has to be gradually decreased by appropriate degaussing circuitry. In the steady state, no significant MMF should remain in the coils ($\leqslant$ 0,3 ampere-turns**).

If single-phase power rectification is employed in the TV circuitry, provision should be included to prevent asymmetric distortion of the AC voltage applied to the degaussing circuit due to high DC inrush currents.

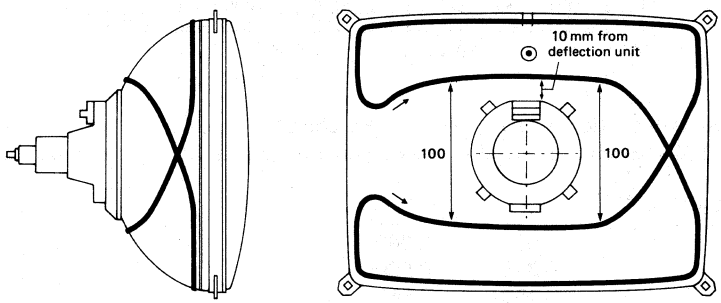

Fig. 19 Continuous-coil system.

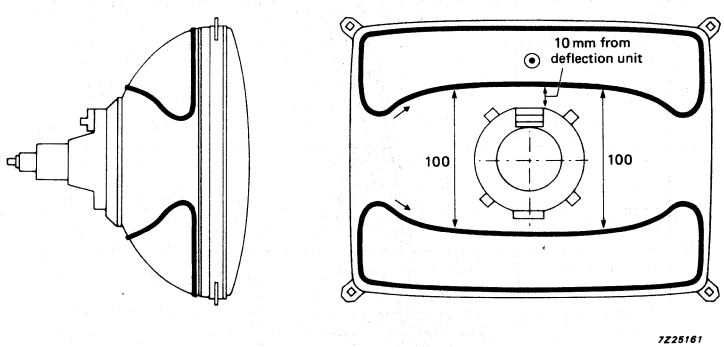

Fig. 20 Double-coil system.

* 300 ampere-turns for double-coil system; 700 ampere-turns for single-coil system.

** $\leqslant$ 0,3 ampere-turns for double-coil system; $\leqslant$ 0,6 ampere-turns for single-coil system.

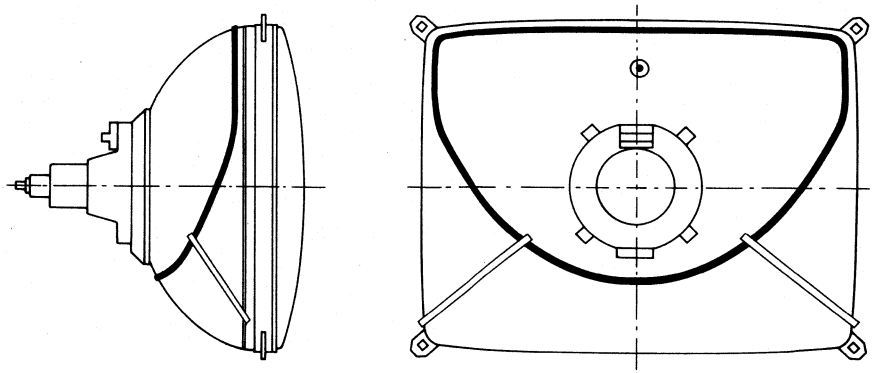

Fig. 21 Single-coil system.

Degaussing circuit using dual PTC thermistor 2322 662 98009; C = 100 nF, for double-coil system, optional for single- and continuous-coil system.

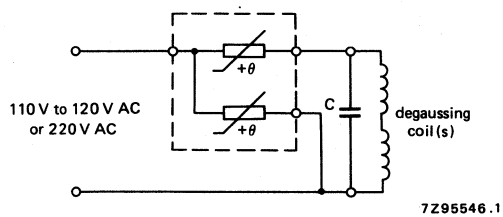

Fig. 22 Degaussing circuit.

Data of degaussing coil

	double-coil system	single-coil system	continuous-coil system
Circumference	125 cm	139 cm	248 cm
Number of turns	60	140	140
Copper-wire diameter	0,4 mm	0,4 mm	0,4 mm
Aluminium-wire diameter	0,5 mm	0,5 mm	0,5 mm
Resistance	22 Ω (two coils in series)	27 Ω	47 Ω

FLAT SQUARE COLOUR PICTURE TUBE ASSEMBLY

- Factory preset tube/coil assembly
- Self-converging and raster correction free
- 51 cm, 90° colour picture tube A51EAL00X
- Hybrid saddle toroidal deflection unit AT6035/04

QUICK REFERENCE DATA

Deflection angle	90°
Minimum useful screen diagonal	51 cm
Overall length	444 mm
Neck diameter	29.1 mm

MECHANICAL DATA

Dimensions in mm

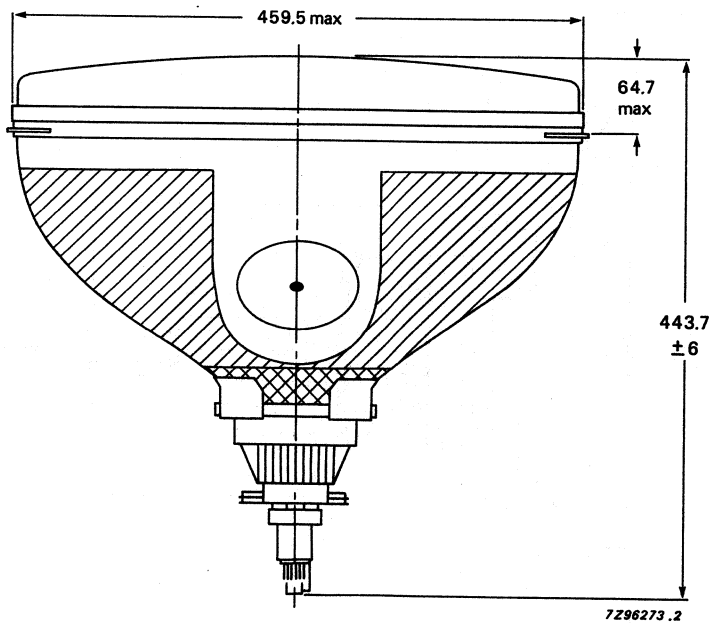

Fig. 1 Colour picture tube assembly A51EAL00X01.

MECHANICAL DATA

Dimensions in mm

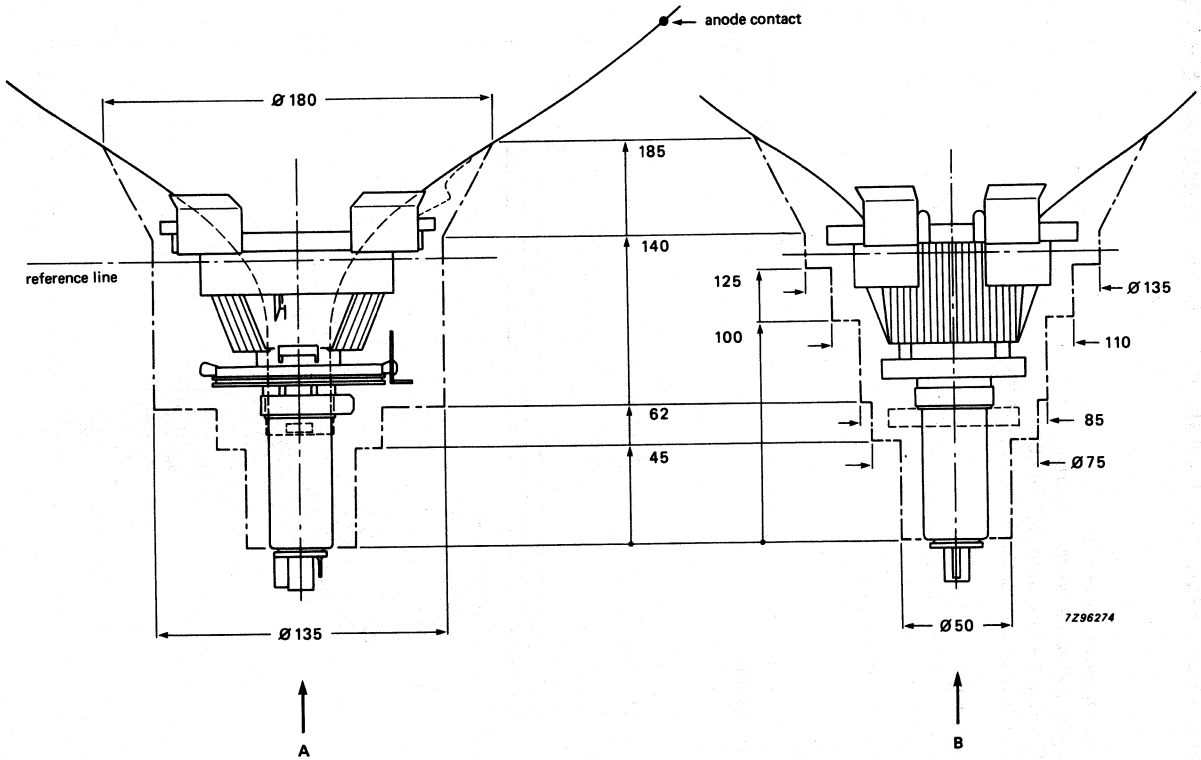

Fig. 2 Yoke clearance.

ELECTRICAL DATA OF DEFLECTION UNIT AT6035/04

Line deflection coils	
Inductance	2.00 mH ± 4%
Resistance at 25 °C	2.35 Ω ± 10%
Magnetic flux at 25 kV	5.70 mWb ± 2.5%
Line deflection current, raster scan, at 25 kV	2.85 A(p-p)
Raster scan	411 mm
Field deflection coils	
Inductance	19.5 mH ± 10%
Resistance at 25 °C	10.1 Ω ± 7%
Field deflection current, raster scan, at 25 kV	1.09 A(p-p)
Raster scan	311 mm
Cross-talk	a voltage of 10 V, 15625 Hz applied to the line coils causes no more than 0.20 V across the field coils (damping resistors included)
Insulation resistance at 1 kV DC	
between line and field coils	> 500 MΩ
between line coil and core clamp	> 500 MΩ
between field coil and core clamp	> 10 MΩ
Maximum operating temperature (average copper temperature)	+ 90 °C
Storage temperature range	−25 to + 90 °C
Flame retardent	according to UL 413, category 94V−1

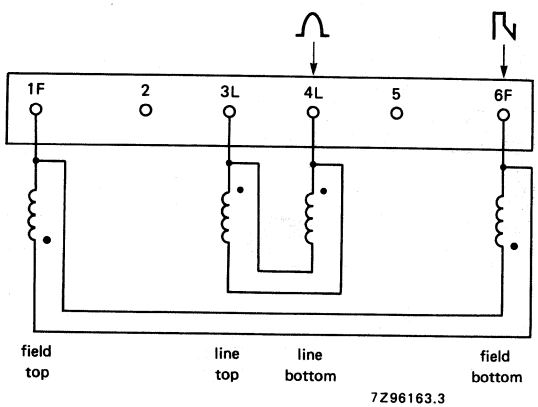

Fig. 3 Connection diagram.

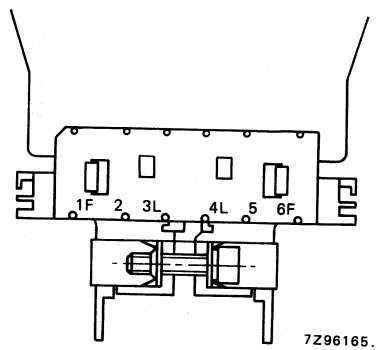

Fig. 4 Terminal location.

The beginning of the windings is indicated with ●.

ENVIRONMENTAL TEST SPECIFICATIONS OF DEFLECTION UNITS

Vibration	IEC 68-2-6 (test Fc)
Shock	IEC 68-2-27 (test Ea)
Bump	IEC 68-2-29 (test Eb; 25g)
Cold	IEC 68-2-1 (test Ab)
Dry heat	IEC 68-2-2 (test Bb)
Damp heat, steady state	IEC 68-2-3 (test Ca)
Cyclic damp heat	IEC 68-2-30 (test Db)
Change of temperature	IEC 68-2-14 (test Nb)

FLAT SQUARE Hi-Bri COLOUR PICTURE TUBE

- Flat and square screen
- 90° deflection
- In-line, hi-bi potential A R T* gun
- 22,5 mm neck diameter
- Hi-Bri technology
- Mask with corner suspension
- Pigmented phosphors
- Quick-heating low-power cathodes
- Soft flash
- Slotted shadow mask optimized for minimum moiré at 625 lines system
- Internal magnetic shield
- Internal multipole
- Reinforced envelope for push-through mounting
- The tube is supplied with a deflection unit of the AT6040 series; it forms a self-converging and raster correction free assembly

QUICK REFERENCE DATA

Deflection angle	90°
Minimum useful screen diagonal	51 cm
Overall length	430 mm
Neck diameter	22,5 mm
Heating	6,3 V, 310 mA
Anode voltage	25 kV
Focusing voltage	31% of anode voltage

* Aberration Reducing Triode.

ELECTRON-OPTICAL DATA

Electron gun system		unitized triple-aperture electrodes; aberration reducing triode
Focusing method		electrostatic
Focus lens		hi-bi-potential
Deflection method		magnetic
Deflection angles		
diagonal		approx. 90°
horizontal		approx. 78°
vertical		approx. 60°

ELECTRICAL DATA

Capacitances		
anode to external conductive coating including rimband	$C_{a(m+m')}$	min. 1500 pF
grid 1 to all other electrodes	C_{g1}	15 pF
cathode of each gun to all other electrodes	C_{kR}, C_{kG}, C_{kB}	4 pF
focusing electrode to all other electrodes	C_{g3}	4 pF
Heating		indirect by AC or DC
heater voltage	V_f	6,3 V
heater current	I_f	310 mA

OPTICAL DATA

Screen		metal-backed vertical phosphor stripes; phosphor lines follow glass contour
Screen finish		high gloss
Useful screen dimensions		
diagonal		min. 508,0 mm
horizontal axis		min. 406,4 mm
vertical axis		min. 304,8 mm
area		min. 1240 cm²
Positional accuracy of the screen with respect to the glass contour		see Figures on the next page
Phosphors		
red		pigmented europium activated rare earth
green		sulphide type
blue		pigmented sulphide type
Centre-to-centre distance of vertical identical colour phosphor stripes, at screen centre		0,69 mm
Light transmission of face glass at centre		64%
→ Luminance at the centre of the screen	L	120 cd/m² *

* Tube settings adjusted to produce white D (x = 0.313, y = 0,329), focused raster, current density 0,4 μA/cm².

A	= 171,67 mm
B	= 223,70 mm
C	= 115,63 mm
D	= 173,89 mm
E	= 23,50 mm

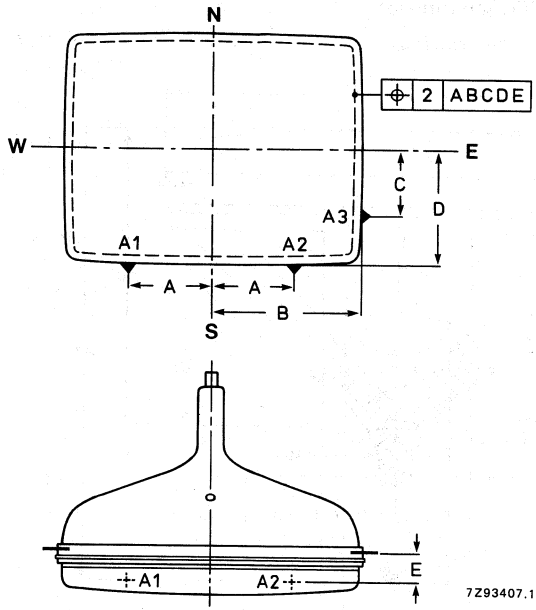

Fig. 1 Tube alignment.

MECHANICAL DATA (see also the figures on the following pages)

Overall length	430,4 ± 4,5 mm
Neck diameter	$22{,}5\ ^{+\ 1{,}4}_{-0{,}7}$ mm*
Bulb dimensions	
diagonal	max. 546,1 mm
width	max. 455,6 mm
height	max. 359,6 mm
Base	JEDEC B8-288
Anode contact	small cavity contact J1-21, IEC 67-III-2
Mounting position	anode contact on top
Net mass	approx. 14 kg

Handling

During shipment and handling the tube should not be subjected to accelerations greater than 35g in any direction.

* In the region of 66 mm from the neck end, the maximum diameter is 23,2 mm.

MECHANICAL DATA (continued)

Notes are given after the drawings.

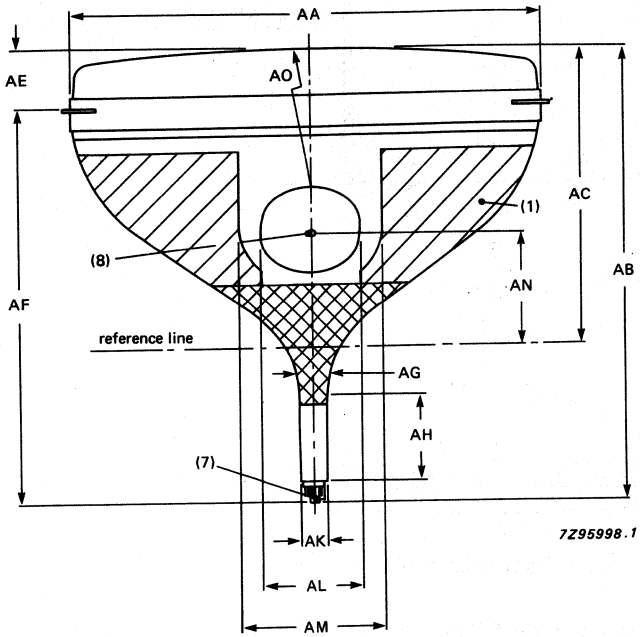

Dimensions in mm

AA	459,5 max
AB	430,4 ± 4,5
AC	288,6 ± 4,0
AE	64,7 max
AF	373 max
AG	$22{,}5\ ^{+1{,}4}_{-0{,}7}$
AH	66
AK	22,5 ± 0,7
AL	110 ± 10
AM	140 ± 3
AN	103 ± 4,5
AO	R1418 approx.

Fig. 2

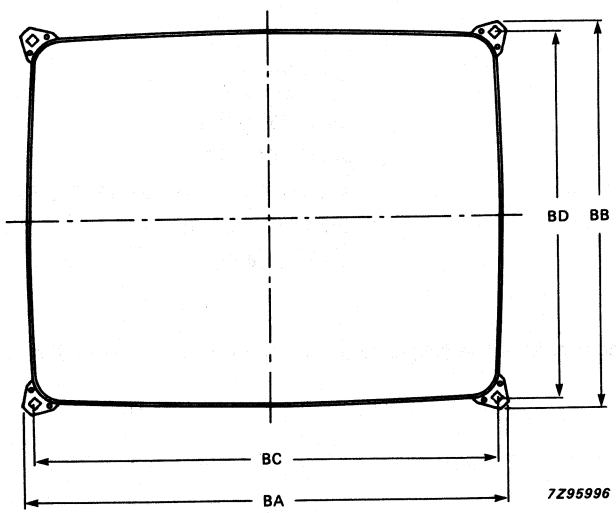

Dimensions in mm

BA	474 max
BB	379 max
BC	449
BD	354

Fig. 3

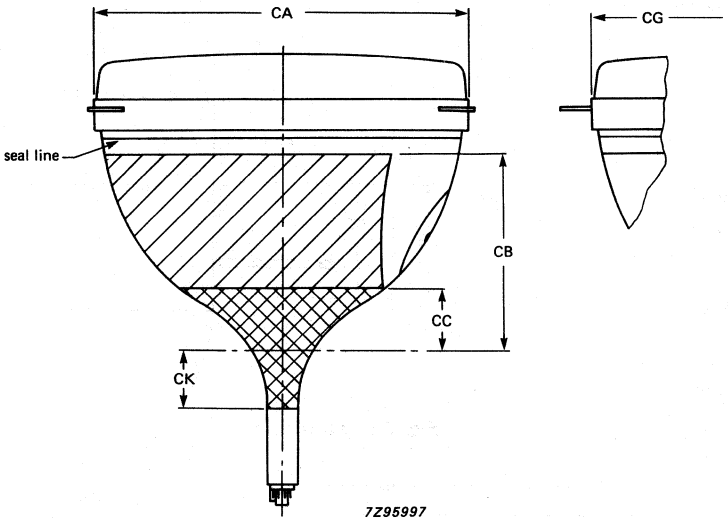

Fig. 4

Dimensions in mm

CA	363,5 max
CB	188 min
CC	46 max
CG	550 max
CK	53 max

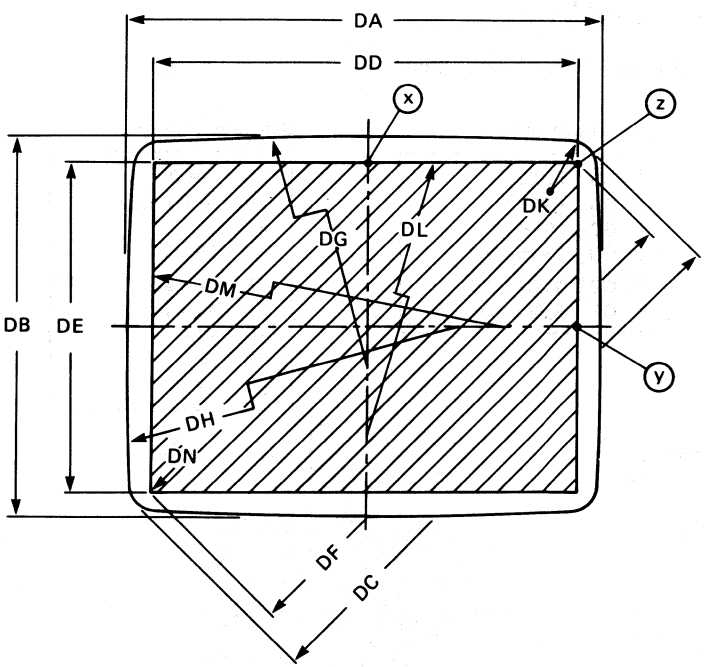

Fig. 5

Dimensions in mm

DA	454,0 ± 1,6
DB	358,0 ± 1,6
DC	544,5 ± 1,6
DD	406,4 min
DE	304,8 min
DF	508,0 min
DG	R3365
DH	R2586
DK	R24,4
DL	R14000
DM	R8000
DN	R0

MECHANICAL DATA (continued)

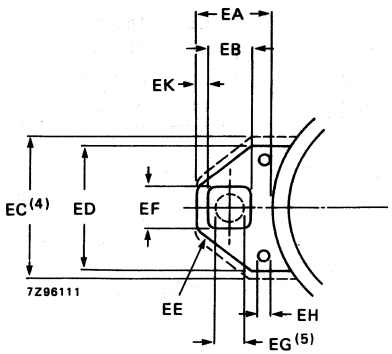

Fig. 6 Lug dimensions.

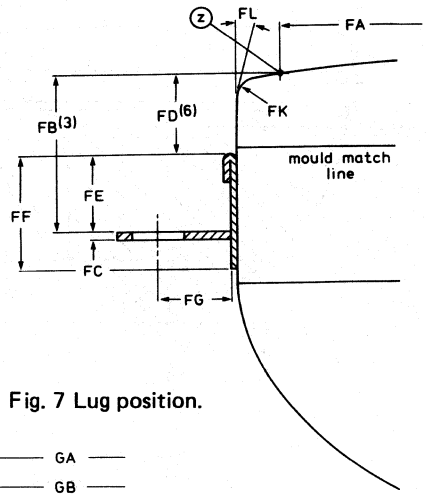

Fig. 7 Lug position.

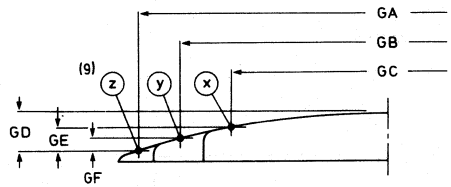

Fig. 8 Screen reference points.

Dimensions in mm

EA	21,6 ± 0,5
EB	12 ± 0,2
EC	40 max
ED	35 ± 1
EE	R12
EF	12 ± 0,2
EG	8
EH	3 min
EK	3 ± 0,5

Dimensions in mm

GA	508,0
GB	406,4
GC	304,8
GD	23,16 ± 2,0
GE	14,64 ± 2,0
GF	8,59 ± 2,0

Dimensions in mm

FA	508,0
FB	38,5 ± 1,8
FC	3
FD	20 min
FE	17 max
FF	25 max
FG	13,4
FK	R8
FL	5°

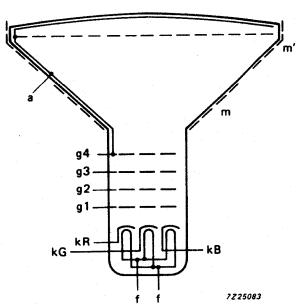

Fig. 9 Electrode arrangement.

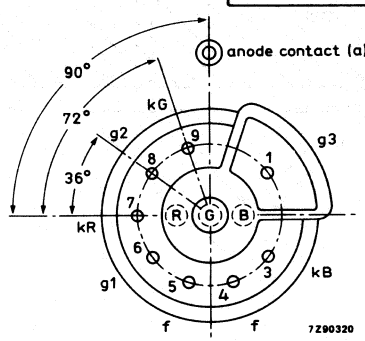

Fig. 10 Pin arrangement.

Notes to outline drawings

1. Configuration of outer conductive coating may be different, but will contain the contact areas as shown in the drawing.
2. To clean this area, wipe only with a soft lintless cloth.
3. One of the four mounting lugs may deviate (1,3 mm max.) from the plane of the other three lugs. This deviation is incorporated in the tolerance of ± 1,8 mm.
4. Minimum space to be reserved for mounting lug.
5. The position of the mounting screw in the cabinet must be within a circle of 8 mm diameter drawn around the true geometrical positions, i.e. corners of a rectangle of 354 mm x 449 mm.
6. Distance from point Z to any hardware.
7. The socket for the base should not be rigidly mounted but should be free to move and the leads connected to the socket should be flexible. After mounting the tube in the cabinet, the position of the base will fall within a circle of diameter 50 mm maximum, concentric with an imaginary tube axis. The mass of the socket plus circuitry should not exceed 0,1 kg. Maximum permissible torque on the neck is 0,04 Nm.
8. Small cavity contact J1-21, IEC 67-III-2.
9. The X, Y and Z reference points are located on the outside surface of the face plate at the intersection of the minor, major and diagonal screen axis respectively, with the minimum published screen.

Table 1 Sagittal heights with reference to screen centre at the edge of the minimum useful screen.

coordinates		sagittal
x	y	height
mm	mm	mm
0*	152,4	8,6
10	152,4	8,6
20	152,4	8,7
30	152,4	8,8
40	152,4	9,1
50	152,4	9,4
60	152,4	9,7
70	152,4	10,1
80	152,4	10,6
90	152,4	11,2
100	152,4	11,8
110	152,4	12,6
120	152,4	13,4
130	152,4	14,2
140	152,4	15,2
150	152,4	16,2
160	152,4	17,3
170	152,4	18,5
180	152,4	19,8
190	152,4	21,2
200	152,4	22,7
203,2**	152,4	23,2
203,2	150	22,9
203,2	140	21,8
203,2	130	20,8
203,2	120	19,9
203,2	110	19,0
203,2	100	18,2
203,2	90	17,5
203,2	80	16,9
203,2	70	16,4
203,2	60	15,9
203,2	50	15,5
203,2	40	15,2
203,2	30	15,0
203,2	20	14,8
203,2	10	14,7
203,2▲	0	14,6

* Point (x)
** Diagonal
▲ Point (y)

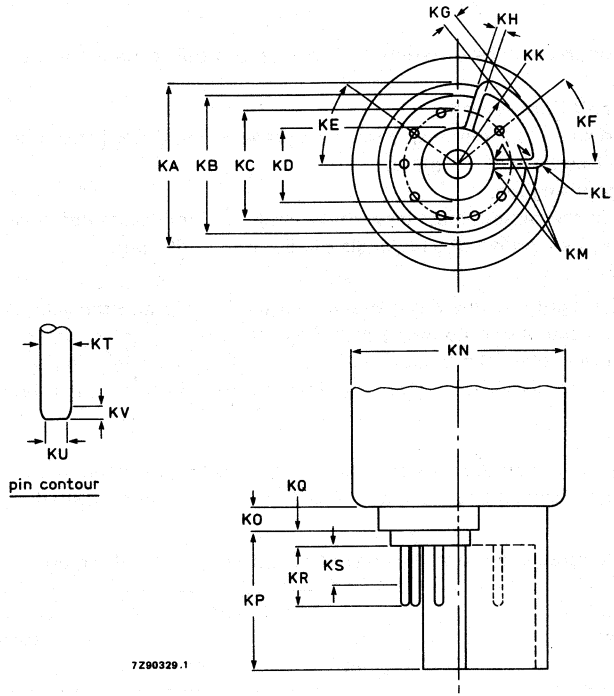

Dimensions in mm

KA	17,9 mm
KB	15,4 max
KC	12,0
KD	7,9 min; 8,2
KE	36°
KF	38°
KG	1,3 max
KH	0,8 min; 1,0 max
KK	R8,66 ± 0,1
KL	R1,0
KM	R0,25
KN	23,2 max
KO	2,7 max
KP	15,4 ± 0,2
KQ	1,2 max
KR	13,6 max
KS	4,5 min
KT	1,016 ± 0,076
KU	0,63 max
KV	0,4 min

Fig. 11 Base JEDEC B8-288.

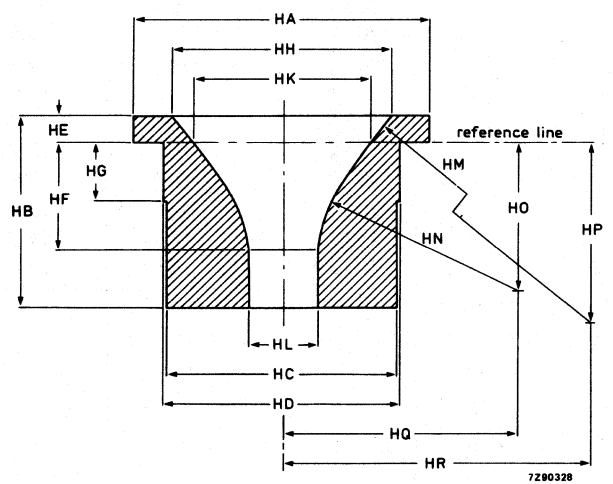

Dimensions in mm

HA	ϕ 100,00
HB	65,00
HC	ϕ 78,70
HD	ϕ 80,00
HE	9,20 ± 0,02
HF	36,22 ± 0,02
HG	20,00
HH	ϕ 75,48 ± 0,02
HK	ϕ 60,77 ± 0,02
HL	ϕ 23,90 $^{+0,04}_{-0}$
HM	R220,00
HN	R70,00
HO	50,30
HP	132,71
HQ	80,52
HR	205,85

Fig. 12 Reference line guage; G-R90CJ10.

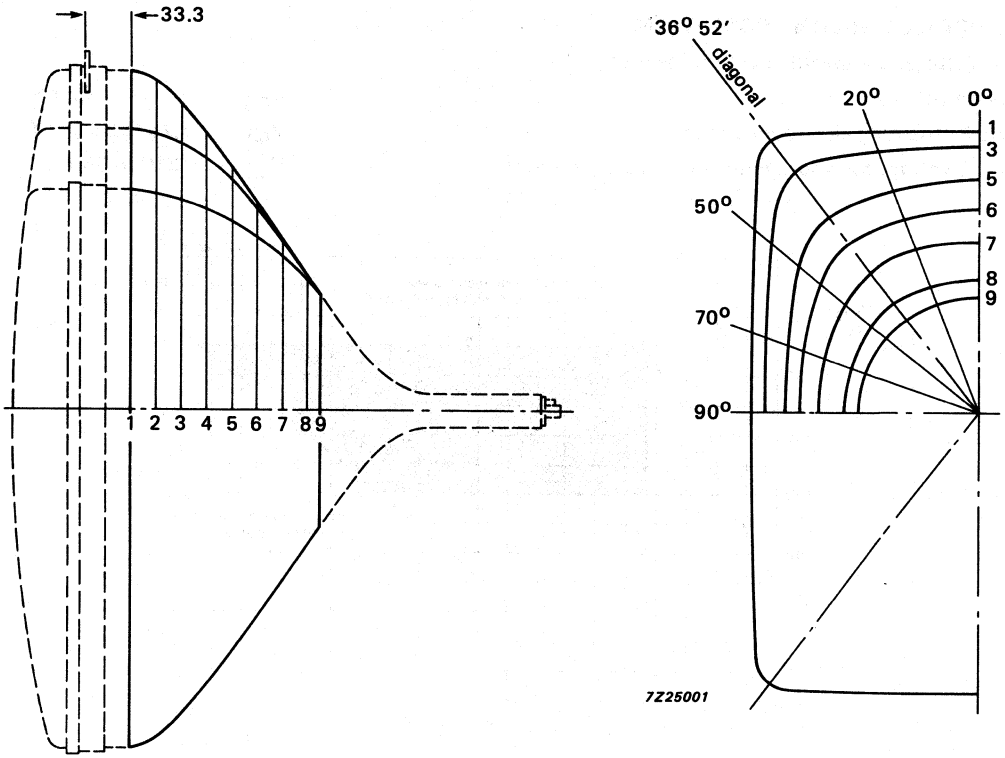

Fig. 13 Maximum cone contour.

Table 2 Cone contour data.

Dimensions in mm

section	nom. dist. from section 1	distance from centre (maximum values)					
		0°	20°	diag.	50°	70°	90°
1	0	225.70	239.06	171.80	227.93	187.87	177.00
2	20	220.16	232.06	258.20	220.62	182.80	172.33
3	40	211.58	221.08	236.60	208.89	175.66	166.06
4	60	199.26	205.77	212.88	194.29	167.09	158.70
5	80	181.50	185.73	187.97	175.74	155.84	149.11
6	100	157.69	160.75	161.44	153.87	141.18	136.50
7	120	130.23	132.65	132.37	128.22	122.18	119.85
8	140	101.15	101.36	101.87	101.01	99.76	98.80
9	149	87.94	87.98	88.00	87.99	87.94	87.88

TYPICAL OPERATING CONDITIONS

The voltages are specified with respect to grid 1.

Anode voltage	$V_{a,g4}$	25 kV
Grid 3 (focusing electrode) voltage	V_{g3}	7,25 to 8,25 kV
Grid 2 voltage for a spot cut-off voltage V_k = 120 V	V_{g2}	310 to 650 V

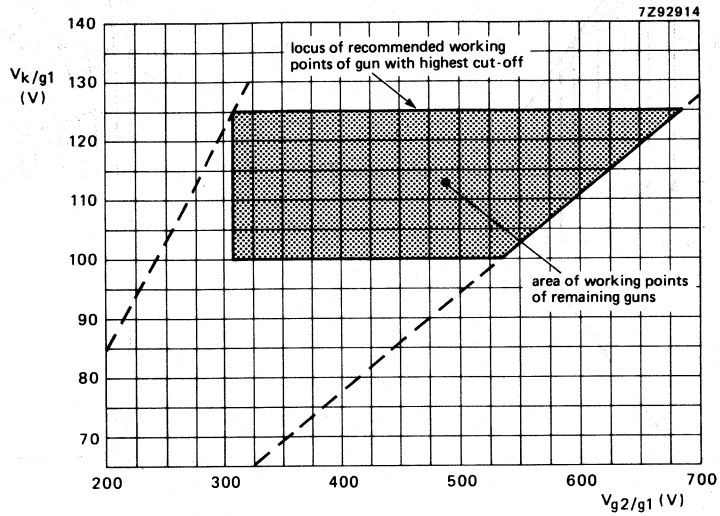

Fig. 14 Spot cut-off design chart.

Grid 2 voltage (V_{g2}) adjusted for highest gun spot cut-off voltage V_k = 125 V.

Remaining guns adjusted for spot cut-off by means of cathode voltage

V_{g2} range 310 to 685 V;

V_k range 100 to 125 V.

Adjustment procedure:

Set the cathode voltage (V_k) for each gun at 125 V; increase the grid 2 voltage (V_{g2}) from approx. 300 V to the value at which one of the colours become just visible. Now decrease the cathode voltage of the remaining guns so that the other colours also become visible.

EQUIPMENT DESIGN VALUES

The values are valid for anode voltages between 20 and 27,5 kV.
The voltages are specified with respect to grid 1.

Grid 3 (focusing electrode) voltage	V_{g3}	29 to 33% of anode voltage
Grid 2 voltage and cathode voltage for visual extinction of focused spot	V_{g2} and V_k	see Fig. 14
Difference in cut-off voltages between guns in any tube	ΔV_k	lowest value > 80% of highest value
Heater voltage	V_f	6,3 V at zero beam current
Video drive characteristics		see graphs
Grid 3 (focusing electrode) current	I_{g3}	−2 to + 2 μA
Grid 2 current	I_{g2}	−2 to + 2 μA
Grid 1 current under cut-off conditions	I_{g1}	−2 to + 2 μA

To produce white of 6500K + 7 M.P.C.D.
(CIE co-ordinates x = 0,313, y = 0,329)

Percentage of the total anode current supplied by each gun (typical)

red gun	38,3%
green gun	35,8%
blue gun	25,9%

Ratio of anode currents

red gun to green gun	min.	0,8
	average	1,1
	max.	1,4
red gun to blue gun	min.	1,1
	average	1,5
	max.	1,9
blue gun to green gun	min.	0,5
	average	0,7
	max.	0,9

Insulation resistance between each cathode and grid 1 and heater — min. 50 MΩ ←

LIMITING VALUES (Design maximum rating system unless otherwise stated)

The voltages are specified with respect to grid 1.

Anode voltage	$V_{a,g4}$	max. min.	27,5 kV 20 kV		notes 1, 2, 3 notes 1 and 4
Long-term average current for three guns	I_a	max.	1000	μA	note 5
Grid 3 (focusing electrode) voltage	V_{g3}	max.	11	kV	
Grid 2 voltage, peak	V_{g2p}	max.	1000	V	
Cathode voltage					
positive	V_k	max.	400	V	
positive operating cut-off, during adjustment	V_k	max.	200	V	
negative	$-V_k$	max.	0	V	
negative peak	$-V_{kp}$	max.	2	V	
Heater voltage	V_f		6,3 V $^{+5}_{-10}$	%	notes 1 and 6
Heater-cathode voltage					
heater negative with respect to cathode					
after equipment warm-up period	V_{kf}	max.	200	V	
heater positive with respect to cathode	$-V_{kfp}$	peak	200	V	note 1
	$-V_{kf}$	max.	0	V	
		(DC component value)			

Notes

1. Absolute maximum rating system.
2. The picture tube does not emit X-radiation above 1 μSv/h when operated within its absolute maximum ratings.
3. During adjustment on the production line this value is likely to be surpassed considerably. It is therefore strongly recommended to first make the necessary adjustments for normal operation without picture tube.
4. Operation of the tube at lower voltages impairs the luminance and resolution.
5. The short-term average anode current should be limited by circuitry to 1500 μA.
6. For maximum cathode life and optimum performance, it is recommended that the heater supply be designed for 6,3 V at zero beam current.

FLASHOVER PROTECTION

With the high voltage used with this tube (max. 27,5 kV) internal flashovers may occur. As a result of the Soft-Flash technology these flashover currents are limited to approx. 60 A offering higher set reliability, optimum circuit protection and component savings.
Primary protective circuitry using properly grounded spark gaps and series isolation resistors (preferably carbon composition) is still necessary to prevent tube damage. The spark gaps should be connected to all picture tube electrodes at the socket according to the figure below; they are not required on the heater pins. No other connections between the outer conductive coating and the chassis are permissible.
The spark gaps should be designed for a breakdown voltage at the focusing electrode (g3) of 12,5 kV ($1{,}5 \times V_{g3}$ max. at $V_{a,g4} = 25$ kV), and at the other electrodes of 1,5 to 2 kV.
The values of the series isolation resistors should be as high as possible (min. 1,5 kΩ) without causing deterioration of the circuit performance. The resistors should be able to withstand an instantaneous surge of 20 kV for the focusing circuit and 12 kV for the remaining circuits without arcing.
Additional information is available on request.

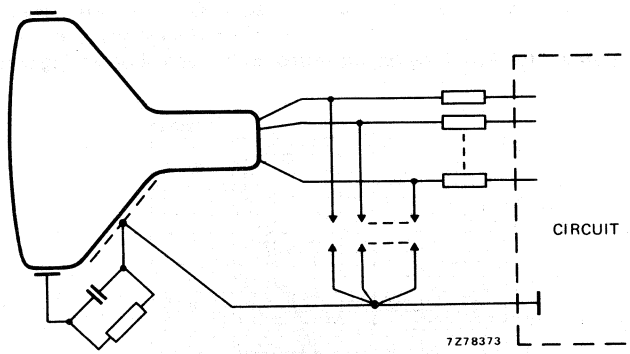

Fig. 15 Flashover protection circuit.

CENTRING ERRORS

Maximum centring error in any direction after colour purity, static convergence, and horizontal centre line correction, measured with deflection coils in nominal position	4 mm

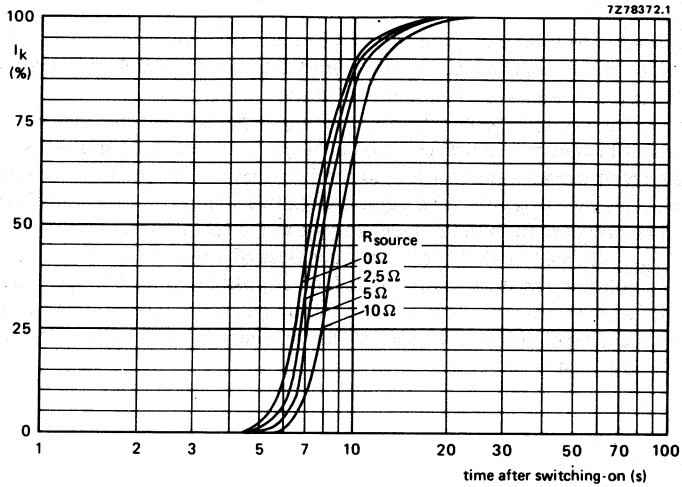

Fig. 16 Cathode heating time after switching on, measured under typical operating conditions.

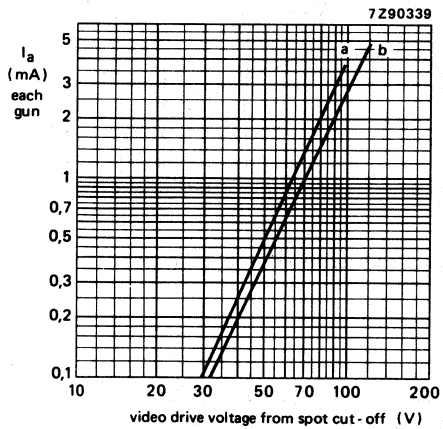

Fig. 17 Typical cathode drive characteristics.

V_f = 6,3 V;

$V_{a,g4}$ = 25 kV;

V_{g3} adjusted for focus;

V_{g2} (each gun) adjusted to provide spot cut-off for V_k = 100 V (curve a), and V_k = 125 V (curve b).

For optimum picture performance it is recommended that the cathodes are not driven below + 1 V.

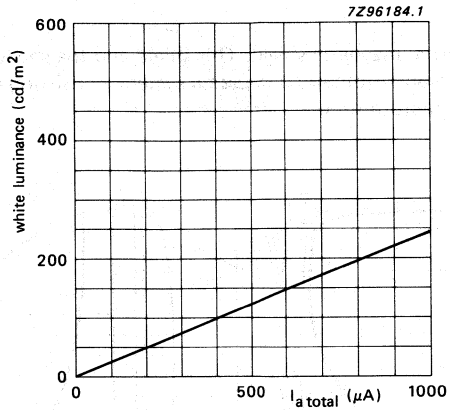

Fig. 18 Luminance at the centre of the screen as a function of I_{total}.

$V_{a,g4}$ = 25 kV.
Scanned area = 406,4 mm x 304,8 mm;
CIE co-ordinates x = 0,313, y = 0,329.

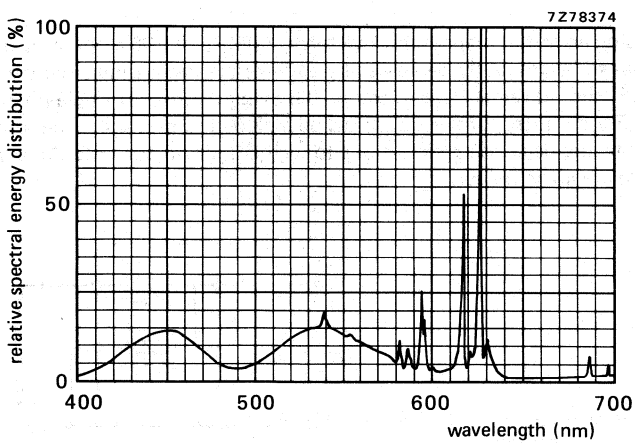

Fig. 19

Simultaneous excitation of red, green and blue phosphor, measured in a tube, to produce white of x = 0,313, y = 0,329. Exact shape of the peaks depends on the resolution of the measuring apparatus.

Colour co-ordinates:	x	y
red	0,635	0,340
green	0,315	0,600
blue	0,150	0,060

DEGAUSSING

The picture tube has an internal magnetic shield. This shield and the shadow mask with its suspension system may be provided with an automatic degaussing system, consisting of one magnetic coil winding mounted on the cone of the picture tube.

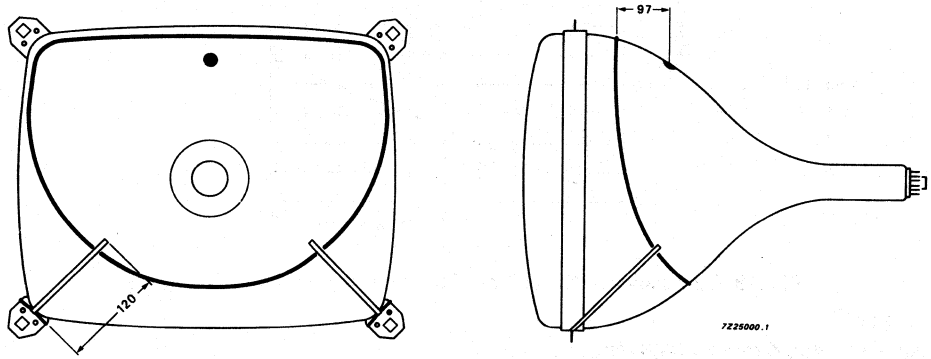

Fig. 20 Position of degaussing coil on the picture tube; dimensions are given in mm.

For proper degaussing an initial magnetomotive force (MMF) of 700 ampere-turns is required in the coil. This MMF has to be gradually decreased by appropriate degaussing circuitry. In the steady state, no significant MMF should remain in the coil ($\leqslant$ 0,6 ampere-turns). If single-phase power rectification is employed in the TV circuitry, provision should be included to prevent asymmetric distortion of the AC voltage applied to the degaussing circuit due to high DC inrush currents. An example of a degaussing circuit and coil data are given below.

Degaussing circuit using dual PTC thermistor 2322 662 98009.

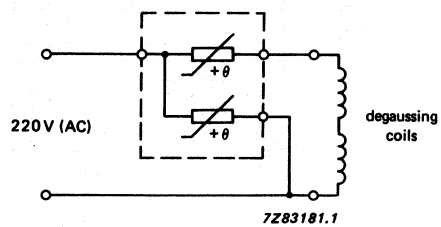

Fig. 21 Degaussing circuit.

Table 3 Data of degaussing coil.

Circumference	139 cm
Number of turns	140
Copper-wire diameter	0,4 mm
Aluminium-wire diameter	0,5 mm
Resistance	27 Ω

FLAT SQUARE COLOUR PICTURE TUBE ASSEMBLY

- Factory preset tube/coil assembly
- Self-converging and raster correction free
- 51 cm, 90° colour picture tube A51EAM30X
- Hybrid saddle toroidal deflection unit AT6040/00

QUICK REFERENCE DATA

Deflection angle	90	°
Minimum useful screen diagonal	51	cm
Overall length	430	mm
Neck diameter	22,5	mm

MECHANICAL DATA

Dimensions in mm

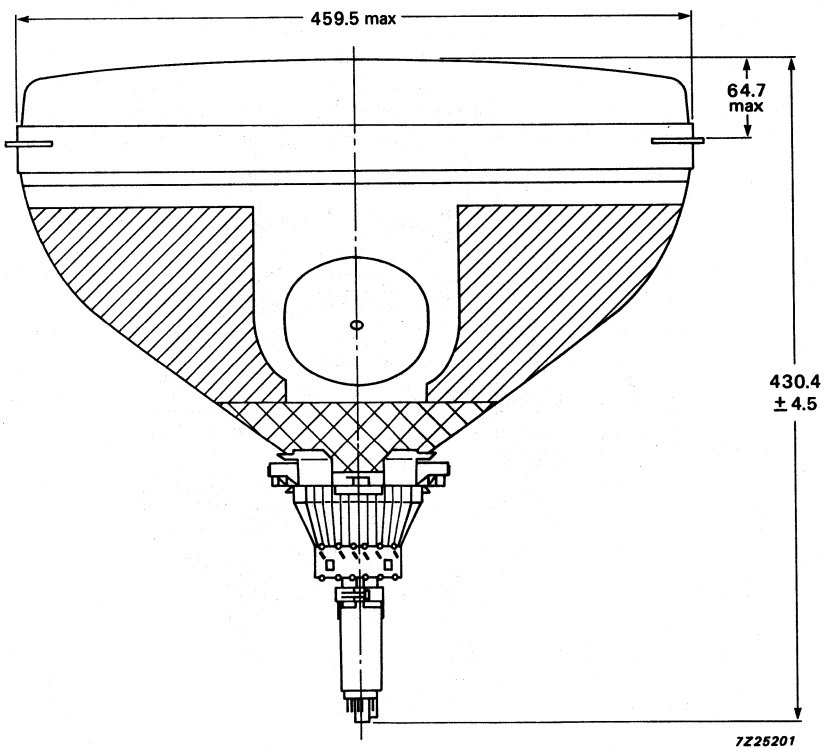

Fig. 1 Colour picture tube assembly.

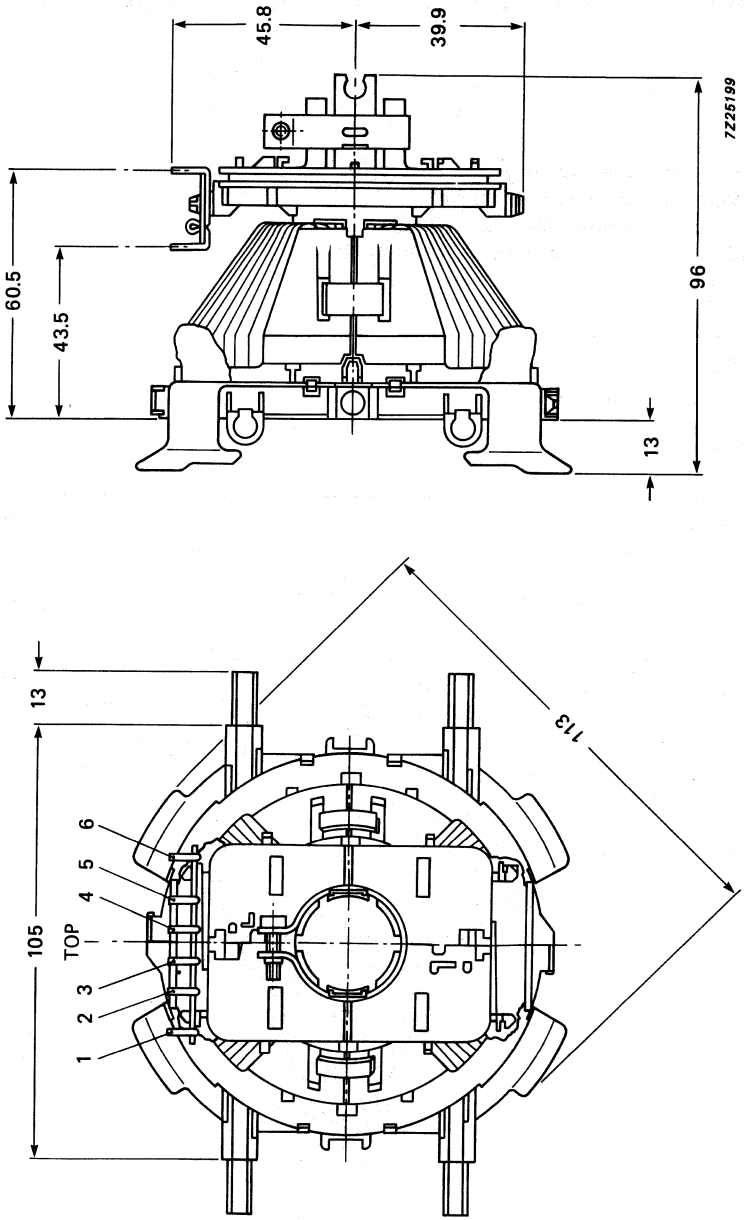

Fig. 2 Deflection unit AT6040/00.

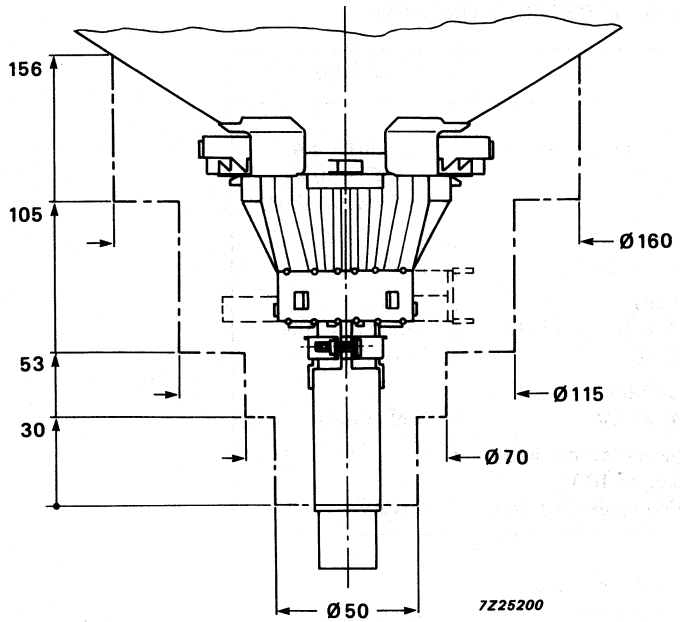

Fig. 3 Yoke clearance.

Maximum operating temperature (average copper temperature measured with resistance method)	+ 90 °C
Storage temperature range	−25 to + 90 °C
Flame retardent	according to UL 1413, category 94-V1
Torque on neck clamp screw	1,0 Nm

ENVIRONMENTAL TEST SPECIFICATIONS OF DEFLECTION UNITS

Vibration	IEC 68-2-6 (test Fc)
Shock	IEC 68-2-27 (test Ea)
Bump	IEC 68-2-29 (test Eb; 25g)
Cold	IEC 68-2-1 (test Ab)
Dry heat	IEC 68-2-2 (test Bb)
Damp heat, steady state	IEC 68-2-3 (test Ca)
Cyclic damp heat	IEC 68-2-30 (test Db)
Change of temperature	IEC 68-2-14 (test Nb)

ELECTRICAL DATA OF DEFLECTION UNITS

parameter	AT6040/00
Line deflection coils	
inductance at 1 V (rms), 1 kHz	2.37 mH ± 4%
resistance at 25 °C	3.16 Ω ± 10%
magnetic flux	5.35 mWb ± 2,5%
Line deflection current	
edge to edge, at 25 kV	2.26 $A_{(p-p)}$
Field deflection coils	
inductance at 1 V (rms), 1 kHz	22.5 mH ± 10%
resistance at 25 °C	11.3 Ω ± 7%
Field deflection current,	
edge to edge, at 25 kV	0.95 $A_{(p-p)}$
Cross-talk: voltage across the field coils when a voltage of 10 V, 15625 Hz is applied to the line coils	< 0.2 V

Insulation resistance at 1 kV (DC)

between line and field coils	> 500 MΩ
between line coil and core clamp	> 500 MΩ
between field coil and core clamp	> 10 MΩ

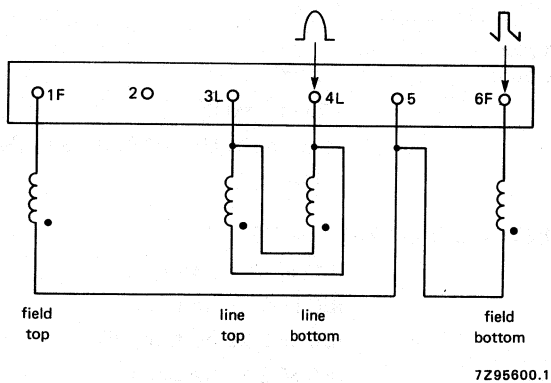

The beginning of the windings is indicated with ●.

Fig.4 Electrical diagram.

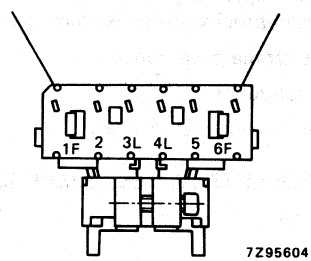

Fig. 5 Terminal location.

FLAT SQUARE Hi-Bri COLOUR PICTURE TUBE

- Flat and square screen
- 110° deflection
- In-line, hi-bi potential A R T* gun with quadrupole cathode lens
- 29,1 mm neck diameter
- Mask with corner suspension
- Hi-Bri technology
- Pigmented phosphors
- Quick-heating low-power cathodes
- Soft-flash
- Slotted shadow mask optimized for minimum moiré at 625 lines systems
- Internal magnetic shield
- Internal multipole
- Reinforced envelope for push-through mounting
- Anti-crackle coating

QUICK REFERENCE DATA

Deflection angle	110°
Minimum useful screen diagonal	59 cm
Overall length	39 cm
Neck diameter	29,1 mm
Heating	6,3 V, 310 mA
Focusing voltage	31% of anode voltage
Anode voltage	25 kV

* Aberration Reducing Triode.

ELECTRON-OPTICAL DATA

Electron gun system	unitized triple-aperture electrodes; aberration reducing triode		
Focusing method	electrostatic		
Focus lens	hi-bi-potential		
Deflection method	magnetic		
Deflection angles			
diagonal	110°		
horizontal	97°		
vertical	77°		

ELECTRICAL DATA

Capacitances			
anode to external conductive coating including rimband	$C_{a(m+m')}$	> 1800	pF
anode to metal rimband	$C_{am'}$	300	pF
cathodes of all guns (connected in parallel) to all other electrodes	C_k	15	pF
cathode of any gun to all other electrodes	C_{kR}, C_{kG}, C_{kB}	5	pF
grid 3 (focusing electrode) to all other electrodes	C_{g3}	6	pF
grid 1 to all other electrodes	C_{g1}	17	pF
grid 2 to all other electrodes	C_{g2}	4,5	pF
Resistance between rimband and external conductive coating		min. 50	MΩ
Heating: indirect by AC (preferably mains or line frequency) or DC			
heater voltage	V_f	6,3	V
heater current	I_f	310	mA

OPTICAL DATA

Screen	metal-backed vertical phosphor stripes; phosphor lines follow glass contour
Screen finish	satinized
Useful screen dimensions	
diagonal	min. 590 mm
horizontal axis	min. 478 mm
vertical axis	min. 363 mm
area	min. 1722 cm²
Positional accuracy of the screen with respect to the glass contour	see Fig. 1
Phosphors	
red	pigmented europium activated rare earth
green	sulphide type
blue	pigmented sulphide type
Persistence	medium short

A = 180,3 mm
B = 257,7 mm
C = 123,0 mm
D = 200,2 mm
E = 25,2 mm

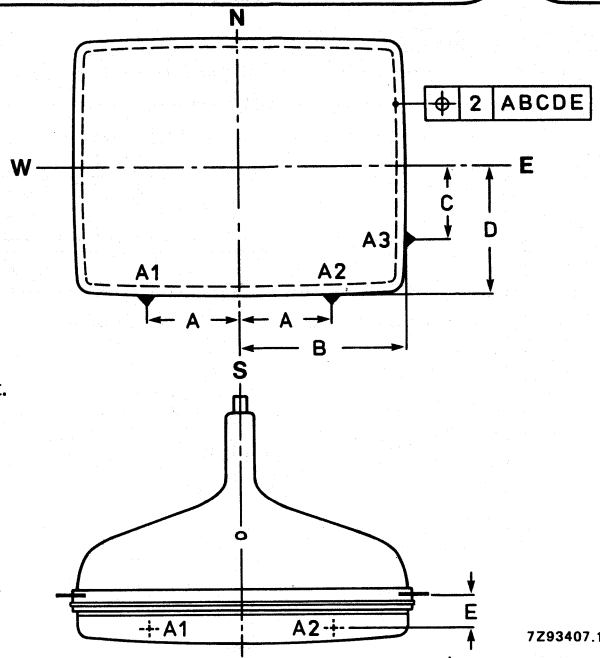

Fig. 1 Tube alignment.

		x	y
Colour co-ordinates			
red		0,635	0,340
green		0,315	0,600
blue		0,150	0,060
Centre-to-centre distance of identical colour phosphor stripes		approx. 0,8 mm	
Light transmission of face glass at screen centre		67%	
Luminance at the centre of the screen	L	130 cd/m² *	←

MECHANICAL DATA (see also Figs 2 to 9)

Overall length	392 ± 6 mm
Neck diameter	$29{,}1^{+1{,}4}_{-0{,}7}$ mm
Base	JEDEC B10-277
Anode contact	small cavity contact J1-21, IEC 67-III-2
Mounting position	anode contact on top
Implosion protection	rimband provided with skirt and slots to accommodate clips for mounting of degaussing coils
Net mass	approx. 19 kg

Handling

During shipment and handling the tube should not be subjected to accelerations greater than 350 m/s² in any direction.

* Tube setting adjusted to produce white D (x = 0,313, y = 0,329), focused raster, current density 0,4 μA/cm².

MECHANICAL DATA (continued)

Dimensions in mm

Notes are given after the drawings.

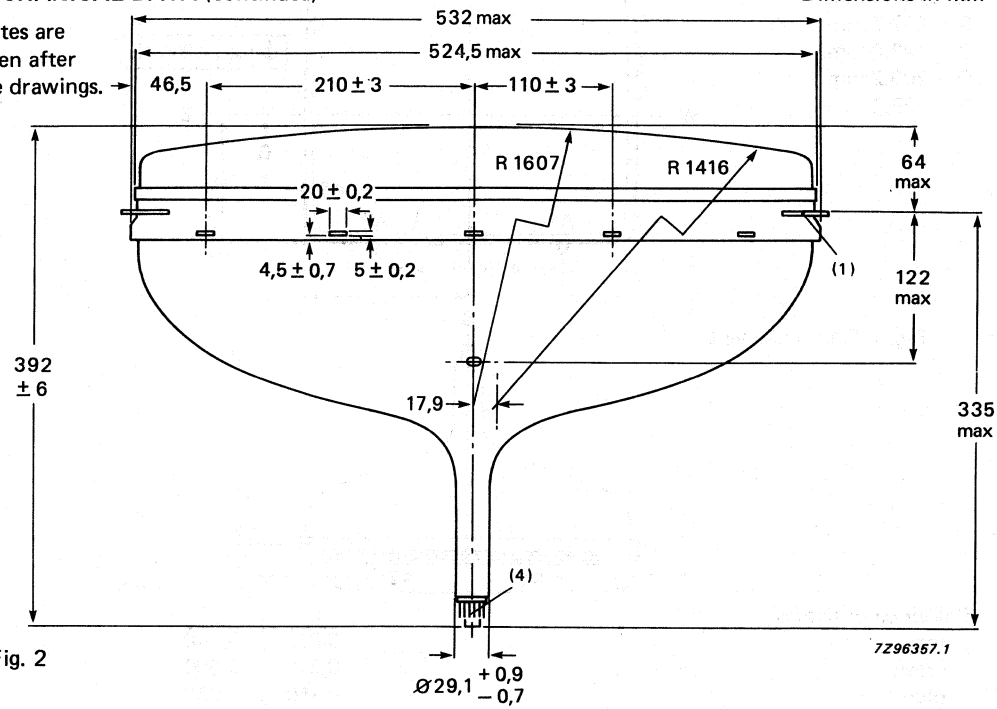

Fig. 2

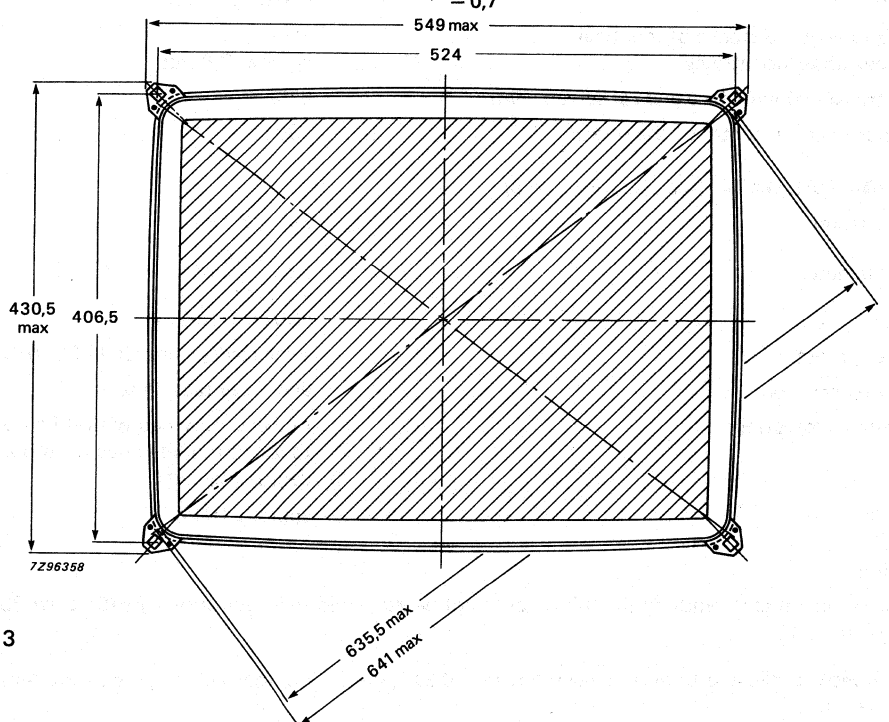

Fig. 3

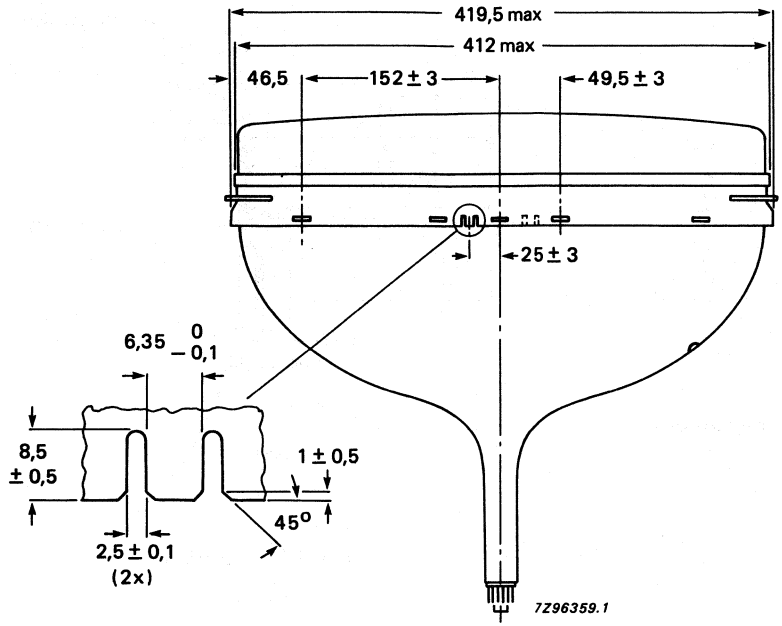
419,5 max
412 max
46,5
152 ± 3
49,5 ± 3
25 ± 3
6,35 0 −0,1
8,5 ± 0,5
1 ± 0,5
45°
2,5 ± 0,1 (2x)
7Z96359.1

Fig. 4

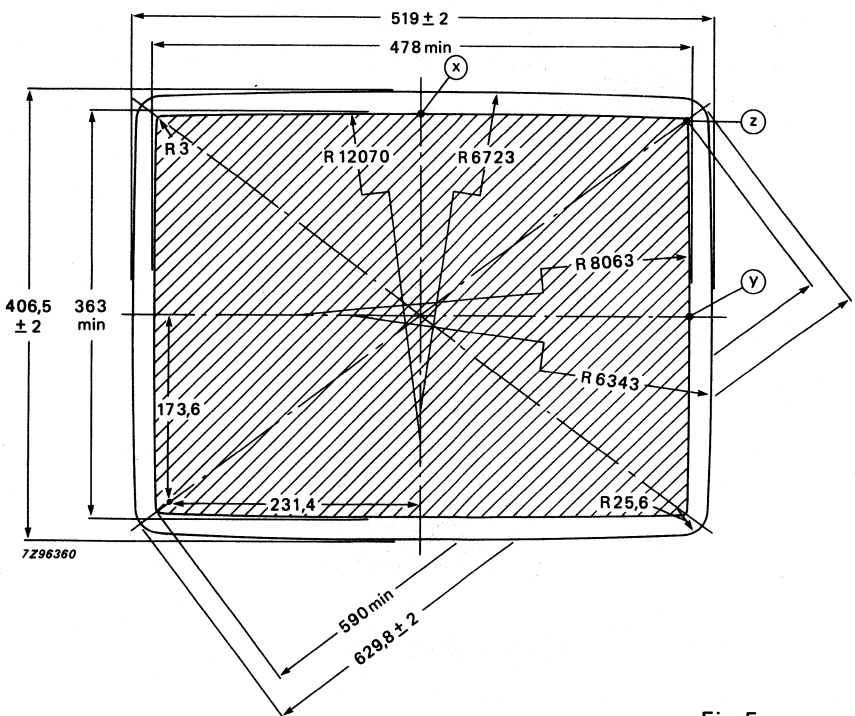
519 ± 2
478 min
x
z
y
R 3
R 12070
R 6723
R 8063
R 6343
406,5 ± 2
363 min
173,6
231,4
R 25,6
590 min
629,8 ± 2
7Z96360

Fig. 5

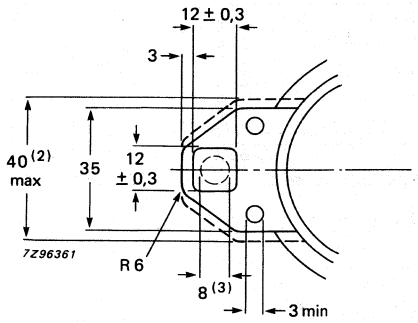

Fig. 6 Lug dimensions.

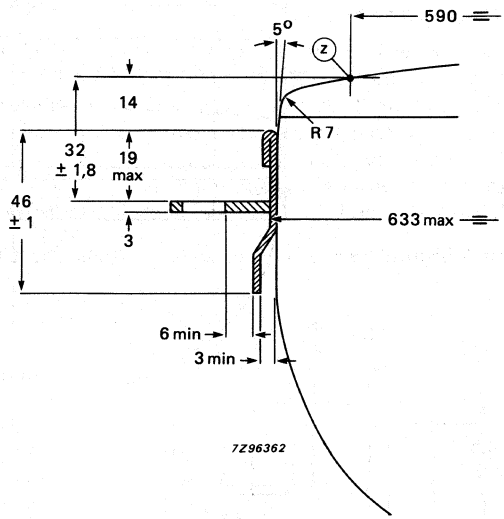

Fig. 7 Lug position.

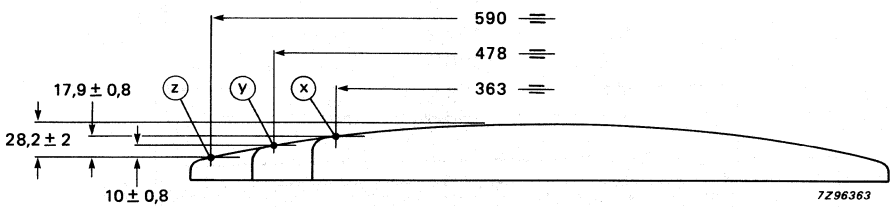

Fig. 8 Screen reference points.

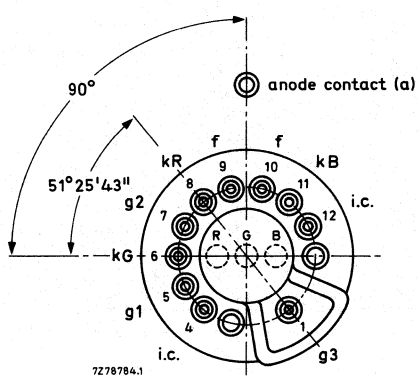

Fig. 9 Pin arrangement.

Notes to outline drawings

1. The displacement of any lug with respect to the plane through the three other lugs is max. 1,5 mm.
2. Minimum space to be reserved for mounting lug.
3. The position of the mounting screw in the cabinet must be within a circle of 8 mm diameter drawn around the true geometrical positions, i.e. the corners of a rectangle of 524 mm x 406,5 mm.
4. The socket for this base should not be rigidly mounted; it should have flexible leads and be allowed to move freely. After mounting of the tube in the cabinet note that the position of the base can fall within a circle, having a diameter of max. 50 mm, concentric with an imaginary tube axis.

Table 1 Sagittal heights with reference to screen centre at the edge of the minimum useful sreen

coordinates		sagittal
x	y	height
mm	mm	mm
0 *	181,5	10,3
20	181,5	10,4
40	181,4	10,8
60	181,3	11,5
80	181,2	12,5
100	181,0	13,5
120	180,8	14,9
140	180,6	16,6
160	180,3	18,5
180	180,0	20,7
200	179,6	23,2
220	179,3	26,0
235,9**	177,1	28,2
237,3	160	26,5
237,7	140	24,5
238,0	120	22,8
238,3	100	21,4
238,6	80	20,3
238,8	60	19,4
238,9	40	18,7
239,0	20	18,3
239,0▲	0	18,2

* Point (x).
** Diagonal.
▲ Point (y).

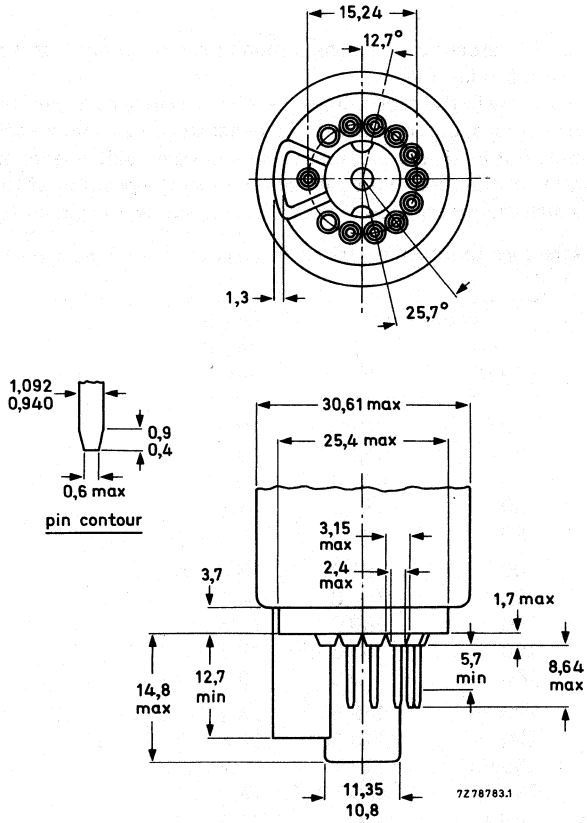

Fig. 10 10-pin base; JEDEC B10-277

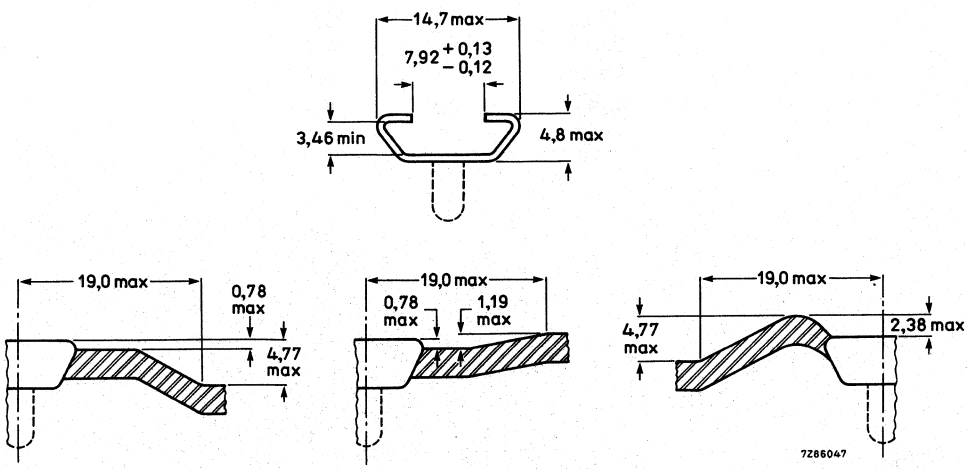

Fig. 11 Cavity cap JEDEC J-21, IEC 67-111-2

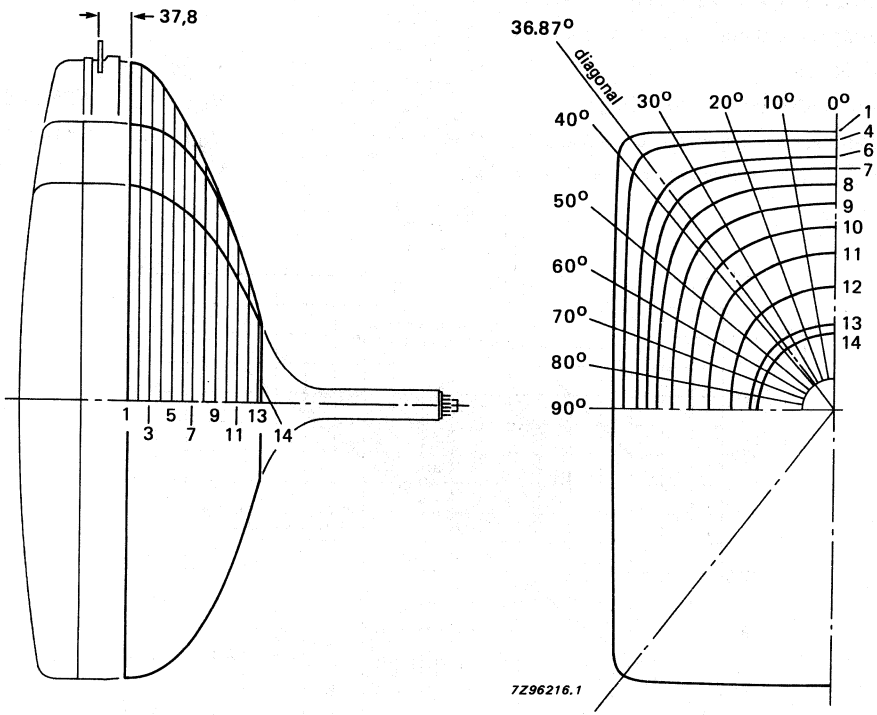

Fig. 12 Maximum cone contour.

Table 2 Cone contour data.

Dimensions in mm

section	nom. distance from section 1	distance from centre										
		0°	10°	20°	30°	36,87°	40°	50°	60°	70°	80°	90°
1	0,00	257,6	261,5	273,7	296,3	314,1	307,9	260,3	231,0	213,3	203,7	200,6
2	10,00	256,9	260,7	272,8	294,9	311,7	305,1	258,6	229,7	212,1	202,6	199,6
3	20,00	254,8	258,5	270,2	291,3	304,7	297,9	254,5	226,3	209,2	199,8	196,9
4	30,00	250,9	254,5	265,5	284,7	293,0	286,6	248,0	221,0	204,5	195,5	192,6
5	40,00	245,1	248,4	258,5	274,1	277,4	271,6	239,0	213,9	198,3	189,7	187,0
6	50,00	237,0	239,9	248,7	260,3	260,0	254,9	228,1	205,4	190,7	182,7	180,1
7	60,00	225,8	228,3	235,6	243,3	241,1	236,7	214,8	194,8	181,5	174,0	171,7
8	70,00	210,7	212,9	218,6	223,2	220,3	216,6	199,0	181,9	170,0	163,2	161,1
9	80,00	191,7	193,4	197,8	200,5	197,6	194,6	180,4	166,1	155,8	149,8	147,9
10	90,00	170,1	171,5	174,6	175,9	173,0	170,4	159,1	147,5	138,8	133,6	131,9
11	100,00	145,8	146,7	148,5	148,4	145,6	143,5	135,0	126,2	119,3	115,1	113,7
12	110,00	115,2	115,8	116,7	116,2	114,4	113,3	108,4	103,0	98,4	95,5	94,4
13	120,00	79,9	80,1	80,3	80,1	79,8	79,6	78,7	77,5	76,4	75,5	75,1
14	121,4	74,4	74,5	74,5	74,5	74,4	74,3	73,9	73,4	72,9	72,5	72,3

TYPICAL OPERATING CONDITIONS

The voltages are specified with respect to grid 1.

Anode voltage	$V_{a,g4}$	25 kV
Grid 3 (focusing electrode) voltage	V_{g3}	7,25 to 8,25 kV
Grid 2 voltage for a spot cut-off voltage V_k = 130 V	V_{g2}	see notes below
Heater voltage under operating conditions	V_f	6,3 V

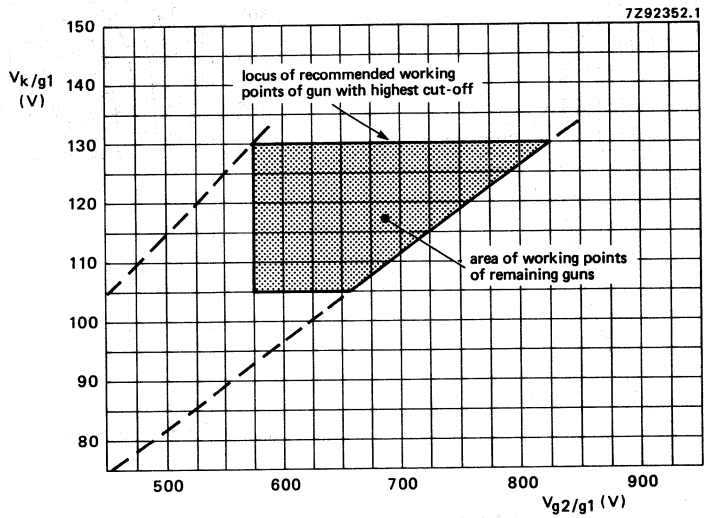

Fig. 13 Spot cut-off design chart.

Grid 2 voltage (V_{g2}) adjusted for highest gun spot cut-off voltage V_k = 130 V.

Remaining guns adjusted for spot cut-off by means of cathode voltage

V_{g2} range 575 to 825 V;

V_k range 105 to 130 V.

Adjustment procedure:

Set the cathode voltage (V_k) for each gun at 130 V; increase the grid 2 voltage (V_{g2}) from approx. 550 V to the value at which one of the colours become just visible. Now decrease the cathode voltage of the remaining guns so that the other colours also become visible.

EQUIPMENT DESIGN VALUES

The values are valid for anode voltages between 20 and 27,5 kV.
The voltages are specified with respect to grid 1.

Grid 3 (focusing electrode) voltage	V_{g3}	29 to 33% of anode voltage
Grid 2 voltage and cathode voltage for visual extinction of focused spot	V_{g2} and V_k	see Fig. 13
Difference in cut-off voltages between guns in any tube	ΔV_k	lowest value > 80% of highest value
Heater voltage	V_f	6,3 V at zero beam current
Video drive characteristics		see Figs. 14 and 15*
Grid 3 (focusing electrode) current	I_{g3}	−2 to + 2 μA
Grid 2 current	I_{g2}	−2 to + 2 μA
Grid 1 current under cut-off conditions	I_{g1}	−2 to + 2 μA

To produce white of 6500K + 7 M.P.C.D.
(CIE-co-ordinates x = 0,313, y = 0,329)

Percentage of the total anode current supplied by each gun (typical)

red gun	38,3%
green gun	35,8%
blue gun	25,9%

Ratio of anode currents

red gun to green gun	min.	0,8
	average	1,1
	max.	1,4
red gun to blue gun	min.	1,1
	average	1,5
	max.	1,9
blue gun to green gun	min.	0,5
	average	0,7
	max.	1,0

Insulation resistance between each cathode and grid 1 and heater — min. 50 MΩ

* For optimum picture performance it is recommended that the cathodes are not driven below + 1 V.

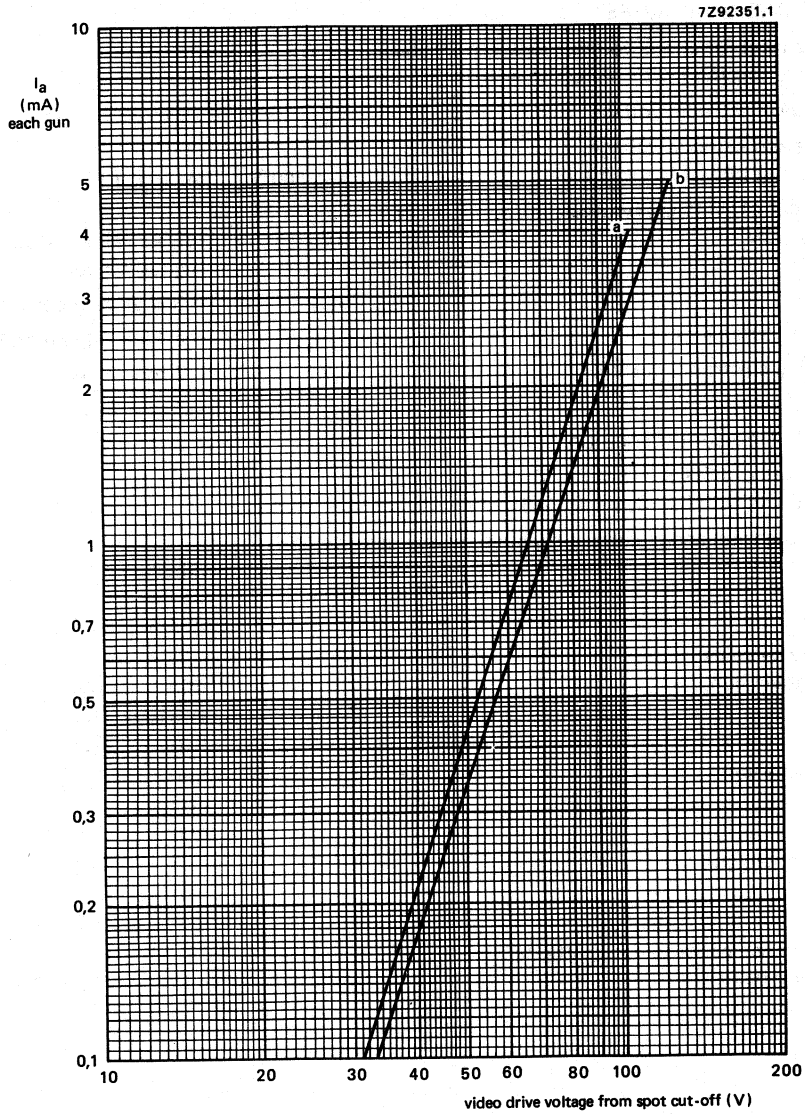

Fig. 14 Typical cathode drive characteristic.

V_f = 6,3 V;
$V_{a,g4}$ = 25 kV;
V_{g3} adjusted for focus;
V_{g2} (each gun) adjusted to provide spot cut-off for V_k = 105 V (curve a) and V_k 130 V (curve b).

LIMITING VALUES (Design maximum rating system unless otherwise specified)

The voltages are specified with respect to grid 1.

				notes
Anode voltage	$V_{a,g4}$	max.	27,5 kV	1, 2, 3
		min.	20 kV	1, 4
Long-term average current for three guns	I_a	max.	1000 μA	5
Grid 3 (focusing electrode) voltage	V_{g3}	max.	11 kV	
Grid 2 voltage	V_{g2}	max.	1200 V	6
Cathode voltage				
positive	V_k	max.	400 V	
positive operating cut-off	V_k	max.	200 V	
negative	$-V_k$	max.	0 V	
negative peak	$-V_{kp}$	max.	2 V	
Cathode to heater voltage				
positive	V_{kf}	max.	250 V	
positive peak	V_{kfp}	max.	300 V	1
negative	$-V_{kf}$	max.	135 V	
negative peak	$-V_{kfp}$	max.	180 V	1
Heater voltage	V_f	6,3 V	+ 5 % / −10 %	1, 7

LIMITING CIRCUIT VALUES

Grid 3 circuit resistance	R_{g3}	max.	70 MΩ	
Grid 1 to cathode circuit resistance (each gun)	R_{g1k}	max.	0,75 MΩ	

BEAM CENTRING

Maximum centring error in any direction	4	mm

Notes to the limiting values

1. Absolute maximum rating system
2. The picture tube does not emit X-radiation above 1 μSv/h when operated within its absolute maximum ratings.
3. During adjustment on the production line this value is likely to be surpassed considerably. It is therefore strongly recommended to first make the necessary adjustments for normal operation with-output picture tube.
4. Operation of the tube at lower voltages impairs the luminance and resolution, and could impair convergence.
5. The short-term average anode current should be limited by circuitry to 1500 μA.
6. During adjustment on the production line max. 1500 V is permitted.
7. For maximum cathode life it is recommended that the heater supply be designed for 6,3 V at zero beam current.

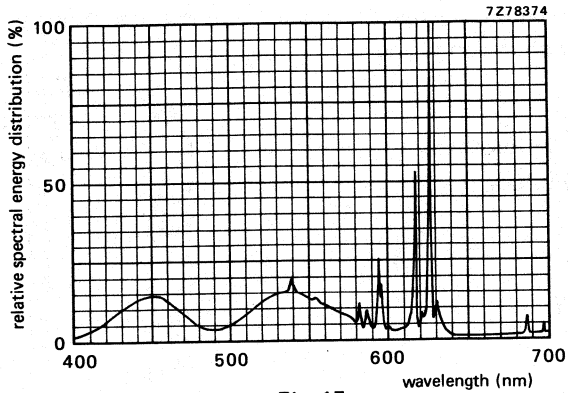

Fig. 15

Simultaneous excitation of red, green and blue phosphor, measured in a tube, to produce white of x = 0,313, y = 0,329. Exact shape of the peaks depends on the resolution of the measuring apparatus.

Colour co-ordinates:	x	y
red	0,635	0,340
green	0,315	0,600
blue	0,150	0,060

DEGAUSSING

The picture tube is provided with an internal magnetic shield. This shield and the shadow mask with its suspension system may be provided with an automatic degaussing system, consisting of two coils covering top and bottom cone parts, or one large coil.

For proper degaussing an initial magnetomotive force (MMF) of 300 ampere-turns is required in each of the coils. This MMF has to be gradually decreased by appropriate circuitry. To prevent beam landing disturbances by line-frequency currents induced in the degaussing coils, these coils should be shunted by a capacitor of sufficiently high value. In the steady state, no significant MMF should remain in the coils ($\leqslant$ 0,15 ampere-turns).

If single-phase power rectification is employed in the TV circuitry, provision should be included to prevent asymmetric distortion of the AC voltage applied to the degaussing circuit due to high DC inrush currents.

To ease the mounting of the coils, the rimband is provided with rectangular holes.

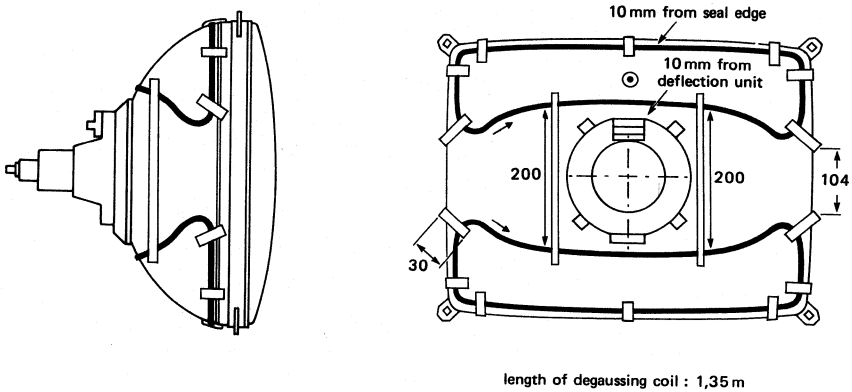

Fig. 16 Double-coil system.

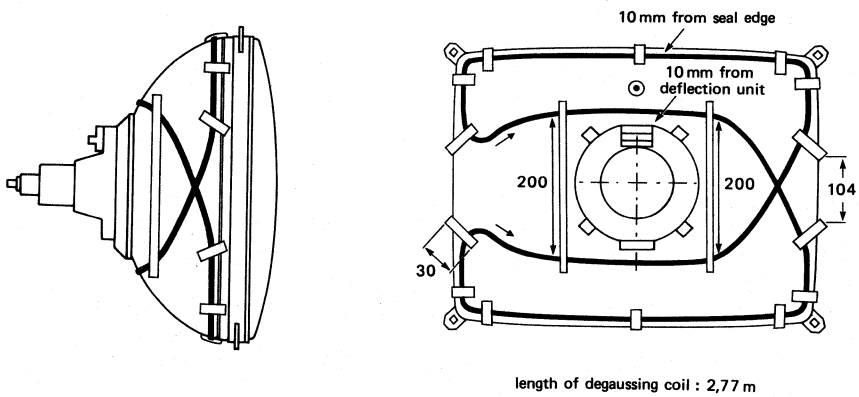

Fig. 17 Single-coil system.

7Z91928

Degaussing circuit using
dual PTC thermistor 2322 662 98009;
C = 100 nF.

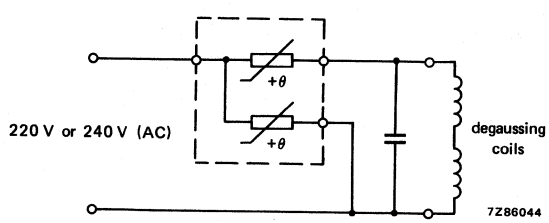

Fig. 19 Degaussing circuit.

Table 3 Data of each degaussing coil

	double-coil system	single-coil system
Circumference	135 cm	277 cm
Number of turns	60	60
Copper-wire diameter	0,4 mm	0,4 mm
Aluminium-wire diameter	0,5 mm	0,5 mm
Resistance	11 Ω	22 Ω

110° FLAT SQUARE COLOUR PICTURE TUBE ASSEMBLY

- Factory preset tube/coil assembly
- Self-converging and north-south raster correction free
- 59 cm, 110° colour picture tube A59EAK00X
- Double saddle deflection unit AT6010

QUICK REFERENCE DATA

Deflection angle	110°
Minimum useful screen diagonal	59 cm
Overall length	39 cm
Neck diameter	29,1 mm

MECHANICAL DATA

Dimensions in mm

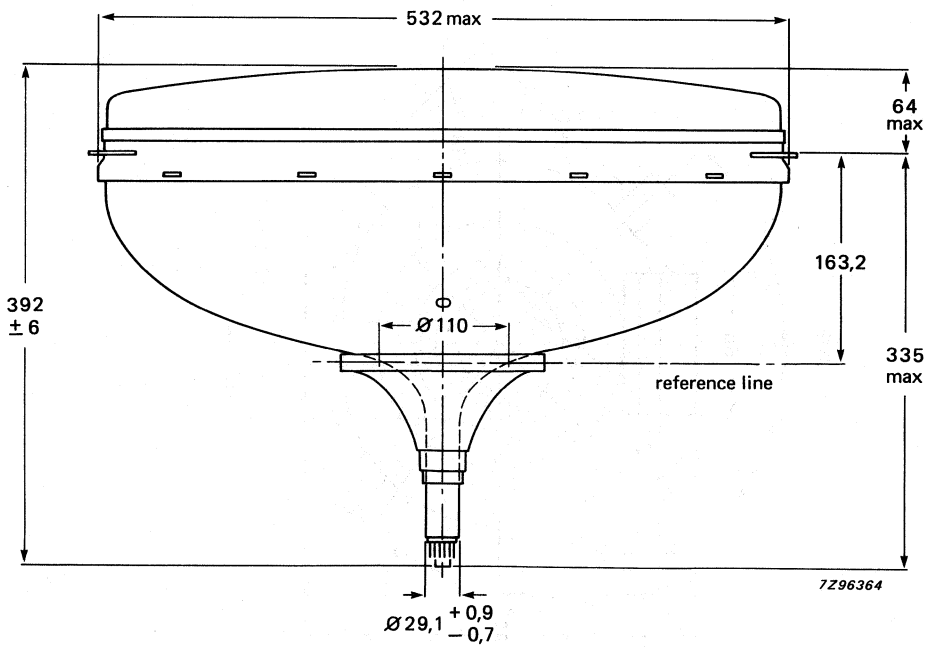

Fig. 1 Tube assembly.

Net mass of tube assembly: 20 kg

MECHANICAL DATA

Dimensions in mm

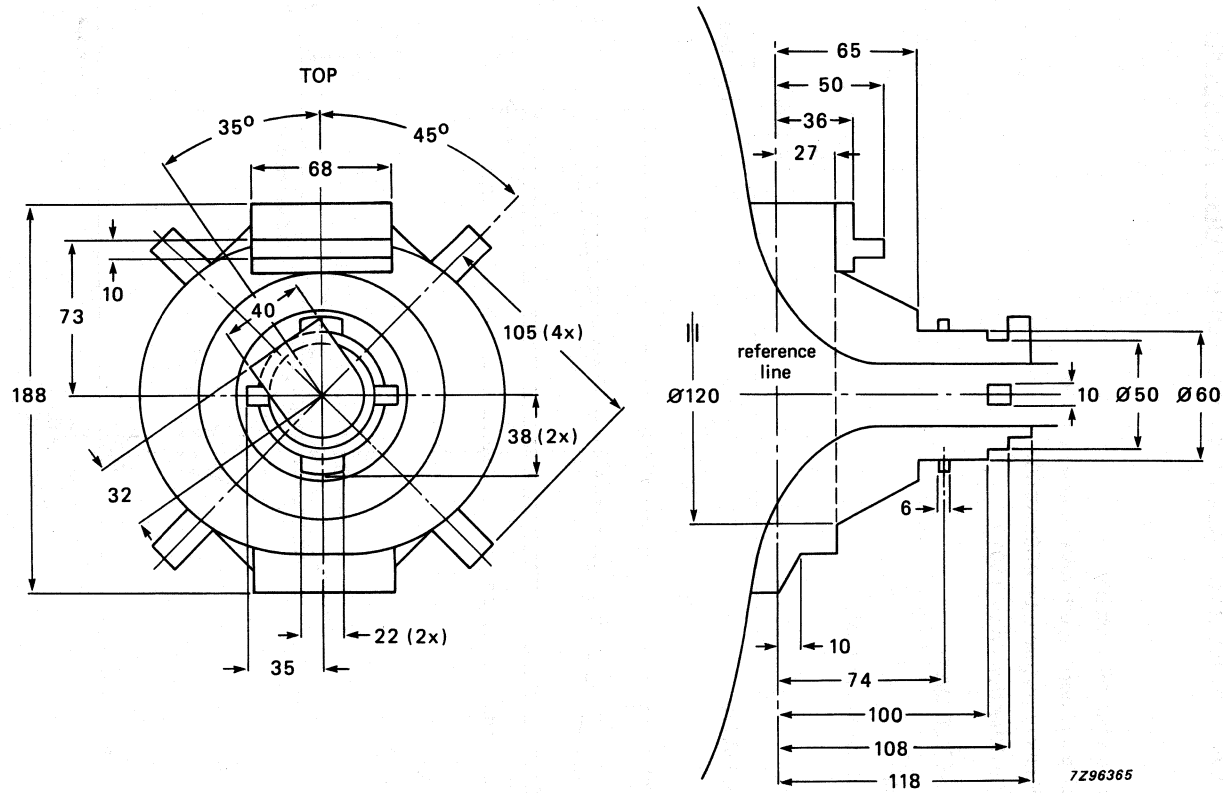

Fig. 2 Yoke clearance.

ELECTRICAL DATA OF DEFLECTION UNIT

Line coils	
Inductance at 1 V (rms), 1 kHz	parallel connected 1,8 mH
Resistance at 25 °C	1,85 Ω
Magnetic flux	7,6 mWb ± 5%
Line deflection current, edge to edge, at 25 kV	4,10 A (p-p)
Field coils	
Inductance at 1 V (rms), 1 kHz	series connected 11,1 mH
Resistance at 25 °C	6,3 Ω
Field deflection current, edge to edge, at 25 kV	1,65 A (p-p)

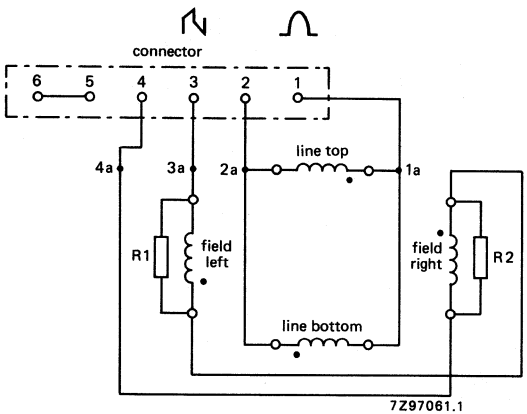

Fig. 3 Electrical diagram.

The beginning of the windings is indicated with ●.
R1 = R2 = 100 Ω, 0,25 W.
Matching Stocko connector MKF 2806-1-0-606.

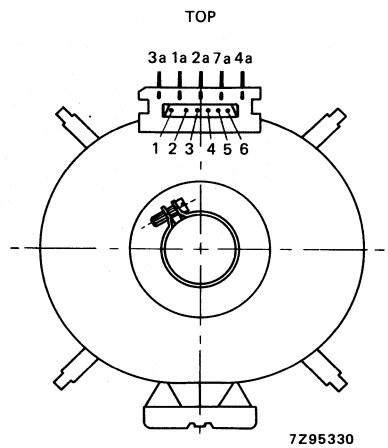

Fig. 4 Terminal location.

FLAT SQUARE Hi-Bri COLOUR PICTURE TUBE

- Flat and square screen
- 110° deflection
- In-line, hi-bi potential A R T* gun with quadrupole cathode lens
- 29,1 mm neck diameter
- Mask with corner suspension
- Hi-Bri technology
- Pigmented phosphors
- Quick-heating low-power cathodes
- Soft flash
- Slotted shadow mask optimized for minimum moiré at 625 lines systems
- Internal magnetic shield
- Internal multipole
- Reinforced envelope for push-through mounting
- Anti-crackle coating

QUICK REFERENCE DATA

Deflection angle	110°
Minimum useful screen diagonal	66 cm
Overall length	42 cm
Neck diameter	29,1 mm
Heating	6,3 V, 310 mA
Anode voltage	25 kV
Focusing voltage	31% of anode voltage

* Aberration Reducing Triode.

ELECTRON-OPTICAL DATA

Electron gun system	unitized triple-aperture electrodes; aberration reducing triode
Focusing method	electrostatic
Focus lens	hi-bi-potential
Deflection method	magnetic
Deflection angles	
diagonal	110°
horizontal	97°
vertical	77°

ELECTRICAL DATA

Capacitances			
anode to external conductive coating including rimband	C_a (m + m')	min.	2000 pF
anode to metal rimband	C_a m'		300 pF
cathodes of all guns (connected in parallel) to all other electrodes	C_k		15 pF
cathode of any gun to all other electrodes	C_{kR}, C_{kG}, C_{kB}		5 pF
grid 3 (focusing electrode) to all other electrodes	C_{g3}		6 pF
grid 1 to all other electrodes	C_{g1}		17 pF
grid 2 to all other electrodes	C_{g2}		4,5 pF
Resistance between rimband and external conductive coating		min.	50 MΩ
Heating: indirect by AC (preferably mains or line frequency) or DC			
heater voltage	V_f		6,3 V
heater current	I_f		310 mA

OPTICAL DATA

Screen	metal-backed vertical phosphor stripes; phosphor lines follow glass contour
Screen finish	satinized
Useful screen dimensions	
diagonal	min. 660 mm
horizontal axis	min. 534,5 mm
vertical axis	min. 406 mm
area	min. 2152 cm²
Positional accuracy of the screen with respect to the glass contour	see Fig. 1
Phosphors	
red	pigmented europium activated rare earth
green	sulphide type
blue	pigmented sulphide type
Persistence	medium short

A = 203,2 mm
B = 287,0 mm
C = 140,2 mm
D = 222,6 mm
E = 25,6 mm

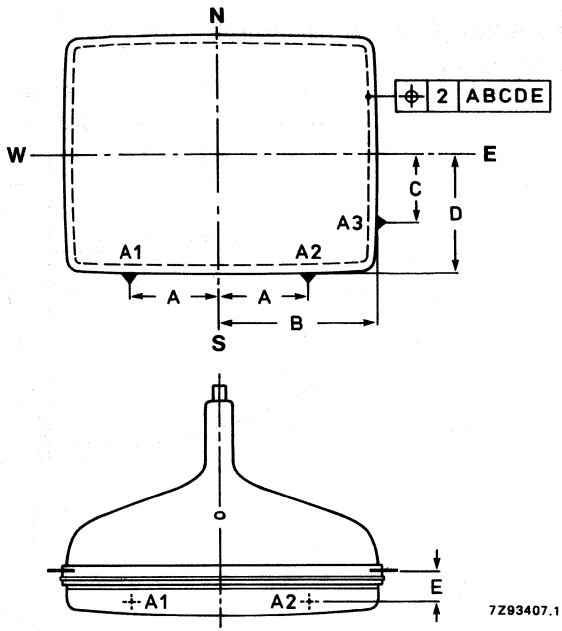

Fig. 1 Tube alignment.

DEVELOPMENT DATA

		x	y
Colour co-ordinates			
red		0,635	0,340
green		0,315	0,600
blue		0,150	0,060
Centre-to-centre distance of identical colour phosphor stripes		approx. 0,8 mm	
Light transmission of face glass at screen centre		65%	
Luminance at the centre of the screen	L	125 cd/m² *	

MECHANICAL DATA (see also the figures 2 to 9 inclusive)

Overall length	422 ± 6 mm
Neck diameter	$29{,}1^{+1{,}4}_{-0{,}7}$ mm
Base	JEDEC B10-277
Anode contact	small cavity contact J1-21, IEC 67-III-2
Mounting position	anode contact on top
Implosion protection	rimband provided with skirt and slots to accommodate clips for mounting of degaussing coils
Net mass	approx. 24,5 kg

Handling

During shipment and handling the tube should not be subjected to accelerations greater than 35g in any direction.

* Tube settings adjusted to produce white D (x = 0,313, y = 0,329), focused raster, current density 0,4 μA/cm².

MECHANICAL DATA (continued)

Dimensions in mm

Notes are given after the drawings.

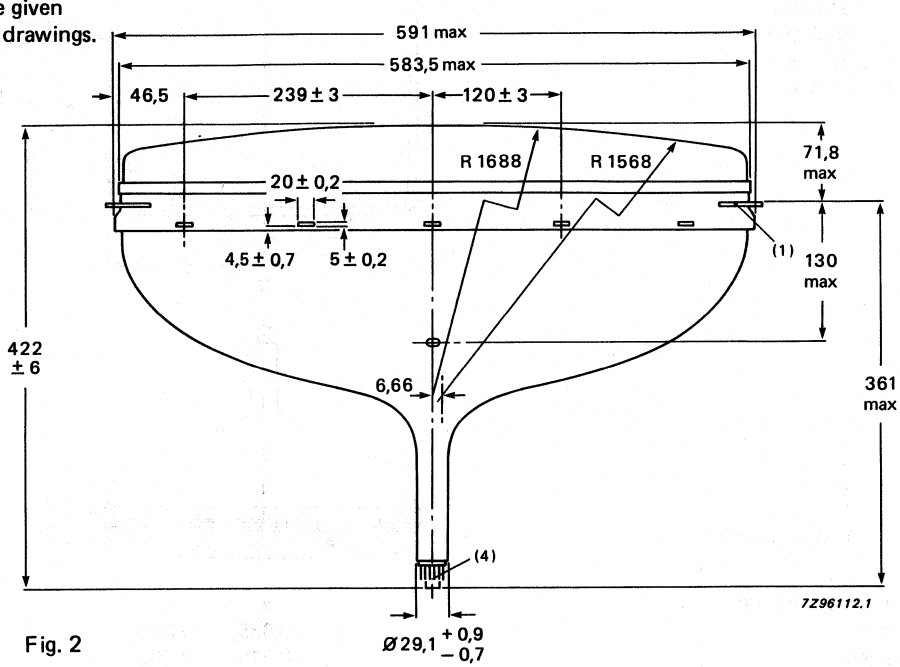

Fig. 2

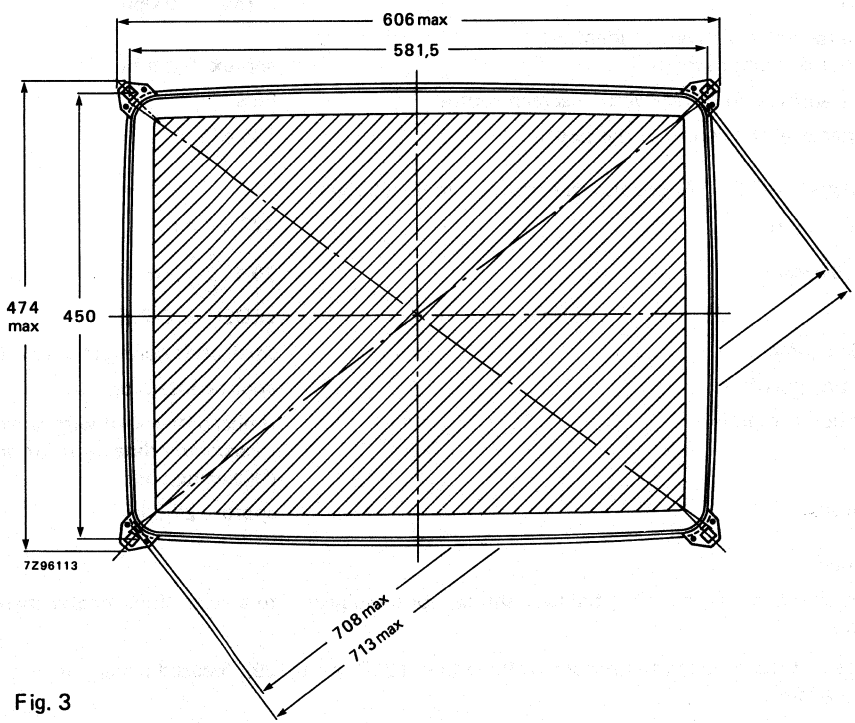

Fig. 3

DEVELOPMENT DATA

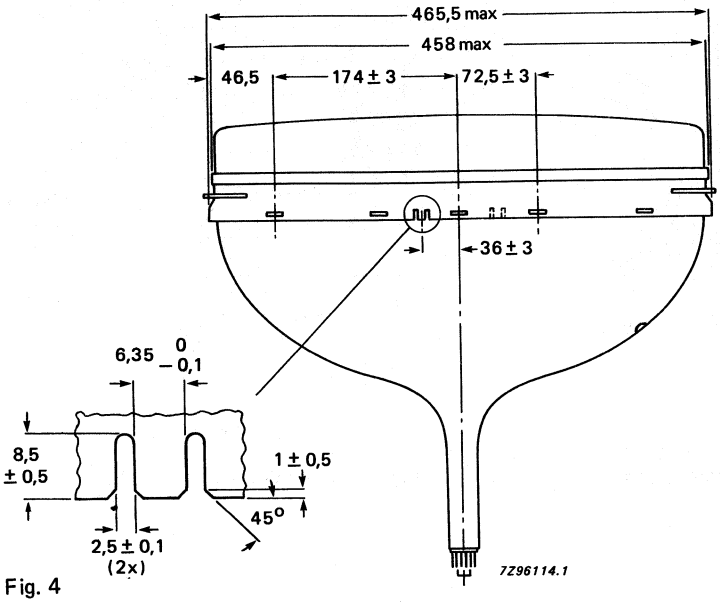

Fig. 4

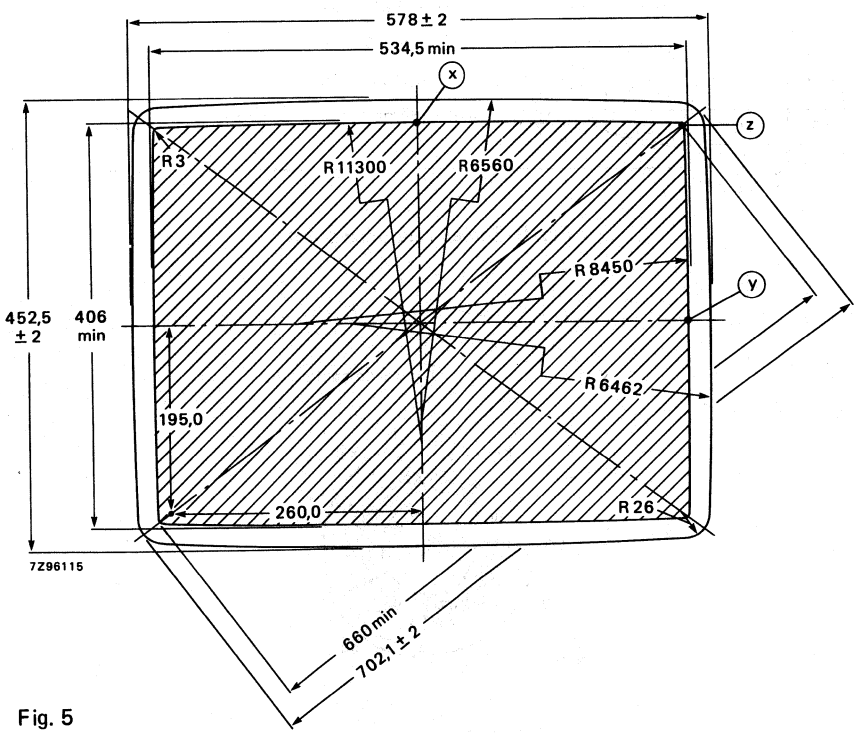

Fig. 5

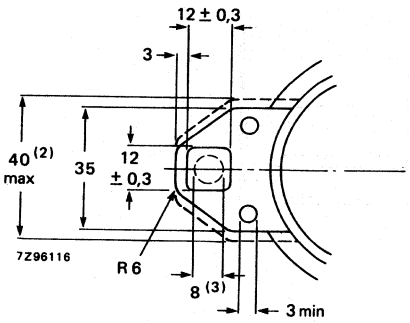

Fig. 6 Lug dimensions.

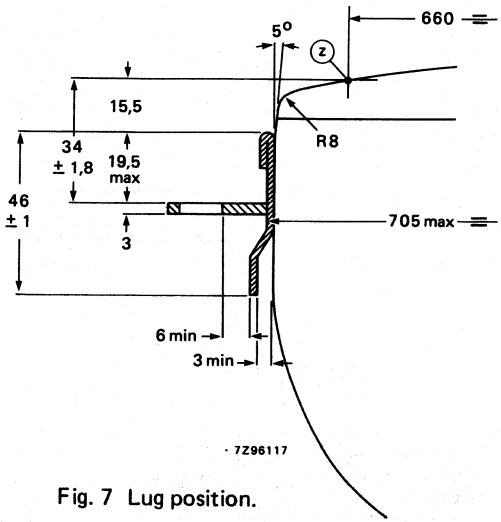

Fig. 7 Lug position.

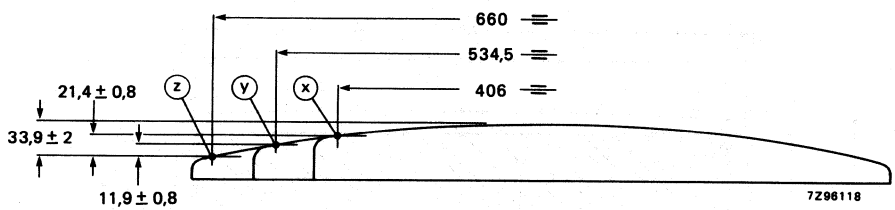

Fig. 8 Screen reference points.

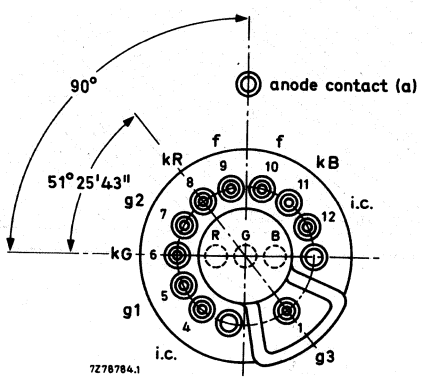

Fig. 9 Pin arrangement.

Notes to outline drawings

1. The displacement of any lug with respect to the plane through the three other lugs is max. 1,5 mm.
2. Minimum space to be reserved for mounting lug.
3. The position of the mounting screw in the cabinet must be within a circle of 8 mm diameter drawn around the true geometrical positions, i.e. the corners of a rectangle of 581,5 mm x 450 mm.
4. The socket for this base should not be rigidly mounted; it should have flexible leads and be allowed to move freely. After mounting of the tube in the cabinet note that the position of the base can fall within a circle, having a diameter of max. 50 mm, concentric with an imaginary tube axis.

Table 1 Sagittal heights with reference to screen centre at the edge of the minimum useful screen

coordinates		sagittal height
x mm	y mm	mm
0*	203,0	12,5
20	203,0	12,6
40	202,9	13,0
60	202,8	13,6
80	202,7	14,5
100	202,6	15,6
120	202,4	16,9
140	202,1	18,5
160	201,9	20,4
180	201,6	22,5
200	201,2	24,9
220	200,9	27,5
240	200,4	30,3
260	200,0	33,5
264,0**	198,0	33,9
265,3	180	31,9
265,7	160	29,8
266,1	140	28,0
266,4	120	26,4
266,7	100	25,1
266,9	80	23,9
267,1	60	23,1
267,2	40	22,5
267,2	20	22,1
267,2▲	0	22,0

* Point (x).
** Diagonal.
▲ Point (y).

DEVELOPMENT DATA

10-pin base; JEDEC B10-277

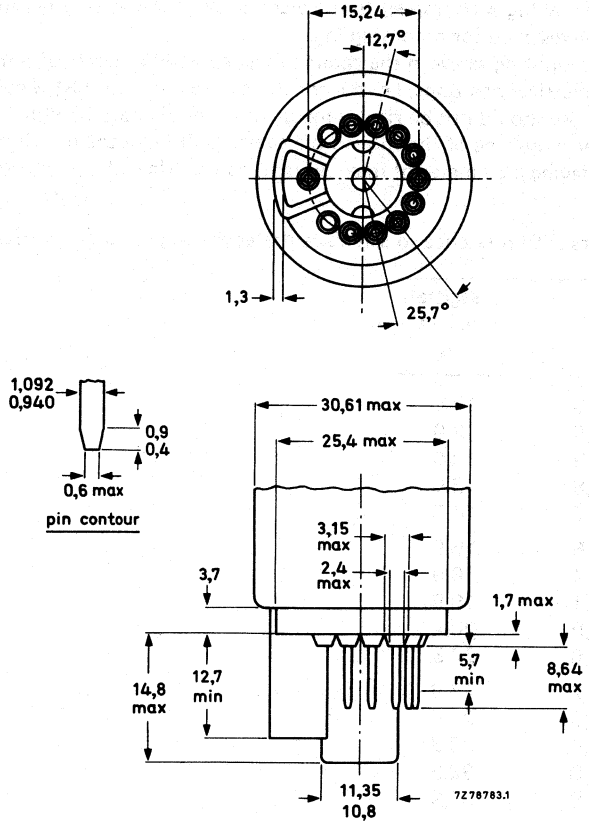

Fig. 10 JEDEC base.

Cavity cap JEDEC J1-21, IEC 67-III-2

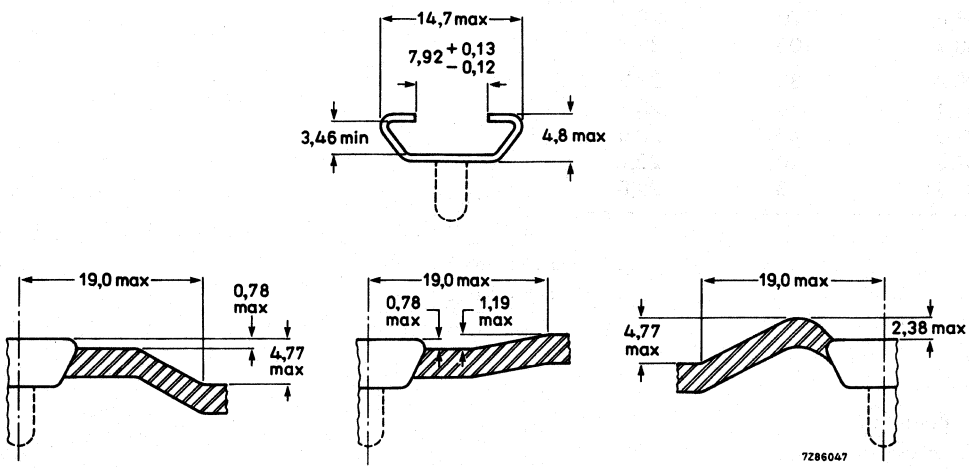

Fig. 11 Cavity cap.

DEVELOPMENT DATA

Maximum cone contour

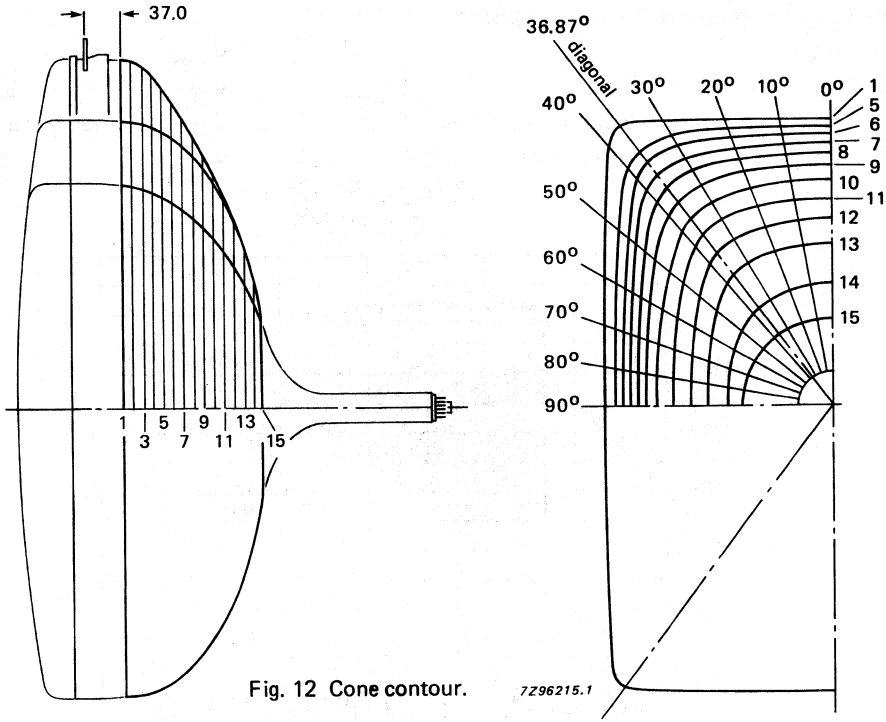

Fig. 12 Cone contour.

Table 2 Cone contour data

Dimensions in mm

section	nom. distance from section 1	distance from centre										
		0°	10°	20°	30°	36,87°	40°	50°	60°	70°	80°	90°
1	0,00	287,2	291,4	304,9	329,6	349,8	341,6	289,2	257,0	237,4	226,8	223,5
2	10,00	286,6	290,8	304,2	328,8	348,1	339,9	288,4	256,2	236,7	226,1	222,8
3	20,00	285,0	289,2	302,4	326,4	342,6	334,6	285,6	253,8	234,5	224,1	220,8
4	30,00	282,1	286,1	298,9	321,2	332,5	324,7	279,7	249,2	230,5	220,3	217,1
5	40,00	277,7	281,5	293,5	313,3	319,6	312,1	271,7	242,7	224,8	215,1	212,0
6	50,00	271,6	275,2	286,3	302,8	305,1	298,2	262,4	235,2	218,2	208,9	205,9
7	60,00	263,8	267,1	276,9	287,8	289,2	283,0	252,1	227,0	211,0	202,1	199,3
8	70,00	253,9	256,8	265,2	274,3	271,9	266,6	240,6	217,8	202,9	194,6	192,0
9	80,00	241,4	243,9	250,9	257,0	253,7	249,1	227,2	207,0	193,2	185,6	183,1
10	90,00	225,6	227,8	233,6	237,8	234,3	230,2	211,4	193,4	180,9	173,9	171,6
11	100,00	207,1	209,1	214,0	217,4	213,8	210,0	192,9	176,7	165,4	159,0	157,0
12	110,00	186,8	188,4	192,6	195,1	191,4	187,7	172,1	157,5	147,5	141,8	139,9
13	120,00	163,7	165,0	168,0	169,0	165,3	162,1	149,2	137,1	128,6	123,7	122,1
14	130,00	126,3	126,7	126,8	125,3	123,2	121,9	117,1	112,0	107,7	104,7	103,7
15	137,12	88,4	88,4	88,4	88,4	88,4	88,4	88,4	88,4	88,4	88,4	88,4

TYPICAL OPERATING CONDITIONS

The voltages are specified with respect to grid 1.

Anode voltage	$V_{a,g4}$	25 kV
Grid 3 (focusing electrode) voltage	V_{g3}	7,25 to 8,25 kV
Grid 2 voltage for a spot cut-off voltage V_k = 130 V	V_{g2}	see below
Heater voltage under operating conditions	V_f	6,3 V

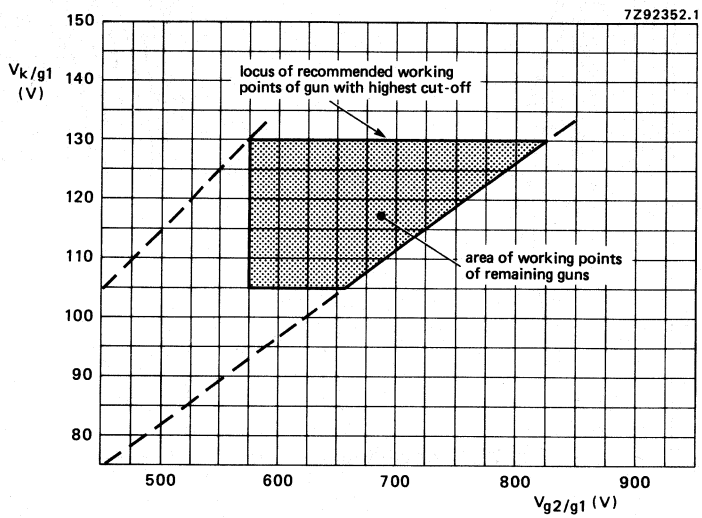

Fig. 13 Spot cut-off design chart.

Grid 2 voltage (V_{g2}) adjusted for highest gun spot cut-off voltage V_k = 130 V.

Remaining guns adjusted for spot cut-off by means of cathode voltage

V_{g2} range 575 to 825 V;

V_k range 105 to 130 V.

Adjustment procedure:

Set the cathode voltage (V_k) for each gun at 130 V; increase the grid 2 voltage (V_{g2}) from approx. 550 V to the value at which one of the colours become just visible. Now decrease the cathode voltage of the remaning guns so that the other colours also become visible.

DEVELOPMENT DATA

EQUIPMENT DESIGN VALUES

The values are valid for anode voltages between 20 and 27,5 kV.
The voltages are specified with respect to grid 1.

Grid 3 (focusing electrode) voltage	V_{g3}		29 to 33% of anode voltage
Grid 2 voltage and cathode voltage for visual extinction of focused spot	V_{g2} and V_k		see Fig. 13
Difference in cut-off voltages between guns in any tube	ΔV_k		lowest value > 80% of highest value
Heater voltage	V_f		6,3 V at zero beam current
Video drive characteristics			see graphs*
Grid 3 (focusing electrode) current	I_{g3}		−2 to + 2 μA
Grid 2 current	I_{g2}		−2 to + 2 μA
Grid 1 current under cut-off conditions	I_{g1}		−2 to + 2 μA
To produce white of 6500K + 7 M.P.C.D. (CIE co-ordinates x = 0,313, y = 0,329)			
Percentage of the total anode current supplied by each gun (typical)			
red gun			38,3%
green gun			35,8%
blue gun			25,9%
Ratio of anode currents			
red gun to green gun		min.	0,8
		average	1,1
		max.	1,4
red gun to blue gun		min.	1,1
		average	1,5
		max.	1,9
blue gun to green gun		min.	0,5
		average	0,7
		max.	1,0
Insulation resistance between each cathode and grid 1 and heater		min.	50 MΩ

* For optimum picture performance it is recommended that the cathodes are not driven below + 1 V.

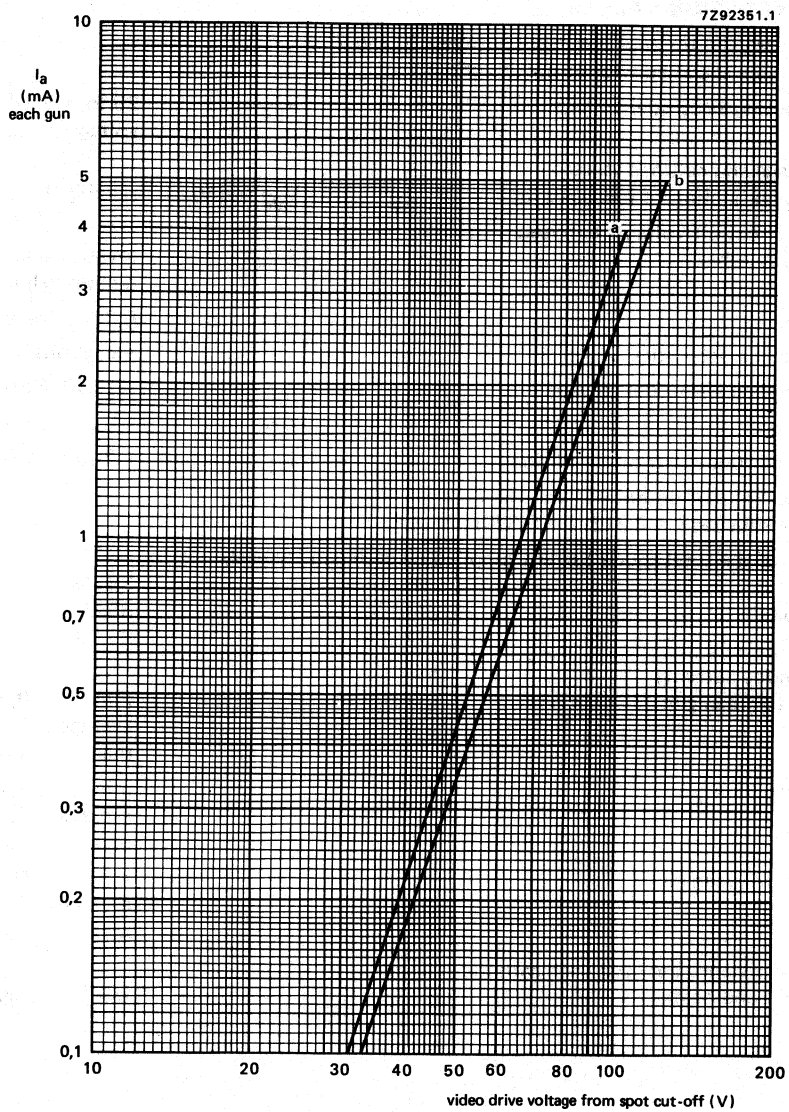

Fig. 14 Typical cathode drive characteristic.

V_f = 6,3 V;
$V_{a,g4}$ = 25 kV;
V_{g3} adjusted for focus;
V_{g2} (each gun) adjusted to provide spot cut-off for V_k = 105 V (curve a) and V_k = 130 V (curve b).

DEVELOPMENT DATA

LIMITING VALUES (Design maximum rating system unless otherwise stated)

The voltages are specified with respect to grid 1.

				notes
Anode voltage	$V_{a,g4}$	max.	27,5 kV	1, 2, 3
		min.	20 kV	1, 4
Long-term average current for three guns	I_a	max.	1000 μA	5
Grid 3 (focusing electrode) voltage	V_{g3}	max.	11 kV	
Grid 2 voltage	V_{g2}	max.	1200 V	6
Cathode voltage				
positive	V_k	max.	400 V	
positive operating cut-off	V_k	max.	200 V	
negative	$-V_k$	max.	0 V	
negative peak	$-V_{kp}$	max.	2 V	
Cathode to heater voltage				
positive	V_{kf}	max.	250 V	
positive peak	V_{kfp}	max.	300 V	1
negative	$-V_{kf}$	max.	135 V	
negative peak	$-V_{kfp}$	max.	180 V	1
Heater voltage	V_f	6,3 V	$^{+5}_{-10}$ %	1, 7

LIMITING CIRCUIT VALUES

Grid 3 circuit resistance	R_{g3}	max.	70 MΩ	
Grid 1 to cathode circuit resistance (each gun)	R_{g1k}	max.	0,75 MΩ	

BEAM CENTRING

Maximum centring error in any direction	4	mm

Notes

1. Absolute maximum rating system.
2. The picture tube does not emit X-radiation above 1 μSv/h when operated within its absolute maximum ratings. ←
3. During adjustment on the production line this value is likely to be surpassed considerably. It is therefore strongly recommended to first make the necessary adjustments for normal operation without picture tube.
4. Operation of the tube at lower voltages impairs the luminance and resolution, and could impair convergence.
5. The short-term average anode current should be limited by circuitry to 1500 μA.
6. During adjustment on the production line max. 1500 V is permitted.
7. For maximum cathode life it is recommended that the heater supply be designed for 6,3 V at zero beam current.

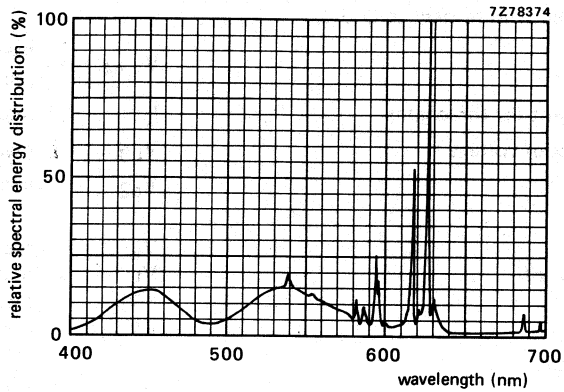

Fig. 15 Simultaneous excitation of red, green and blue phosphor, measured in a tube, to produce white of x = 0,313, y = 0,329. Exact shape of the peaks depends on the resolution of the measuring apparatus.

Colour co-ordinates:	x	y
red	0,635	0,340
green	0,315	0,600
blue	0,150	0,060

DEGAUSSING

The picture tube is provided with an internal magnetic shield. This shield and the shadow mask with its suspension system may be provided with an automatic degaussing system, consisting of two coils covering top and bottom cone parts, or on large coil.

For proper degaussing an initial magnetomotive force (MMF) of 300 ampere-turns is required in each of the coils. This MMF has to be gradually decreased by appropriate circuitry. To prevent beam landing disturbances by line-frequency currents induced in the degaussing coils, these coils should be shunted by a capacitor of sufficiently high value. In the steady state, no significant MMF should remain in the coils ($\leqslant$ 0,15 ampere-turns).

If single-phase power rectification is employed in the TV circuitry, provision should be included to prevent asymmetric distortion of the AC voltage applied to the degaussing circuit due to high DC inrush currents.

To ease the mounting of the coils, the rimband is provided with rectangular holes.

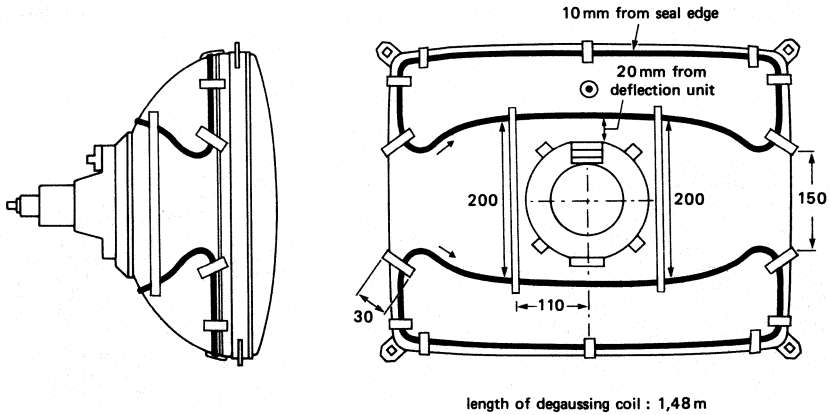

Fig. 16 Double-coil system.

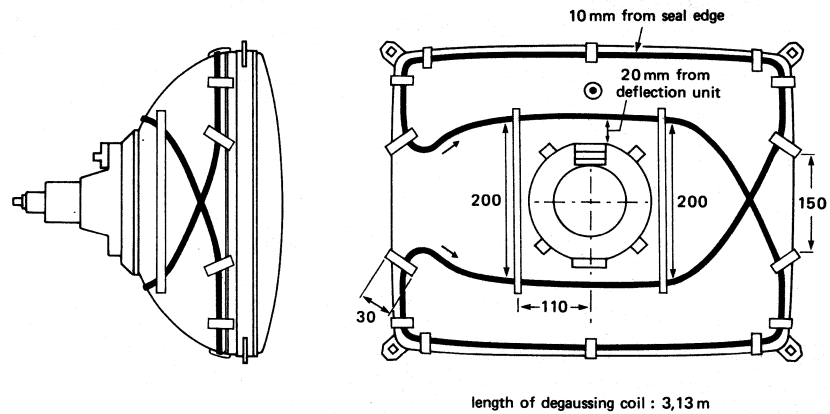

Fig. 17 Single-coil system. 7Z91928

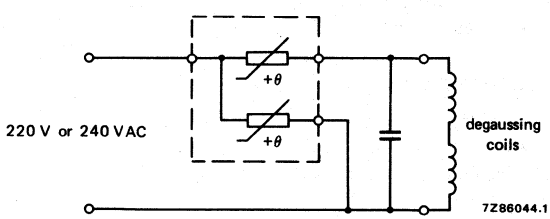

Fig. 18 Degaussing circuit using dual PTC thermistor 2322 662 98009; C = 100 nF.

Data of each degaussing coil

	double-coil system	single-coil system
Circumference	148 cm	313 cm
Number of turns	60	60
Copper-wire diameter	0,4 mm	0,4 mm
Aluminium-wire diameter	0,5 mm	0,5 mm
Resistance	12 Ω	25 Ω

MECHANICAL DATA

Dimensions in mm

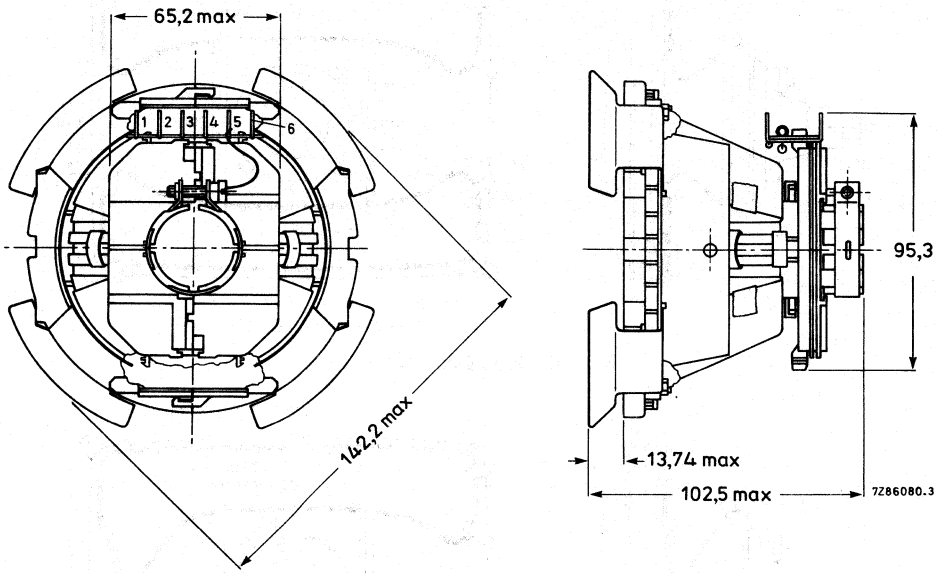

Fig. 2 Deflection unit AT1236/20.

ELECTRICAL DATA OF DEFLECTION UNIT

Line deflection coils	
Inductance	1.91 mH ± 5%
Resistance at 25 °C	1.75 Ω ± 10%
Line deflection current, raster scan, at 25 kV	3.0 A(p-p)
Raster scan	404 mm
Field deflection coils	
Inductance	27.6 mH ± 10%
Resistance at 25 °C	13.2 Ω ± 7%
Field deflection current, raster scan, at 25 kV	0.895 A(p-p)
Raster scan	303 mm

110° FLAT SQUARE COLOUR PICTURE TUBE ASSEMBLY

- Factory preset tube/coil assembly
- Self-converging and north-south raster correction free
- 66 cm, 110° colour picture tube A66EAK50X
- Double saddle deflection unit AT6005/00

QUICK REFERENCE DATA

Deflection angle	110°
Minimum useful screen diagonal	66 cm
Overall length	42 cm
Neck diameter	29,1 mm

MECHANICAL DATA

Dimensions in mm

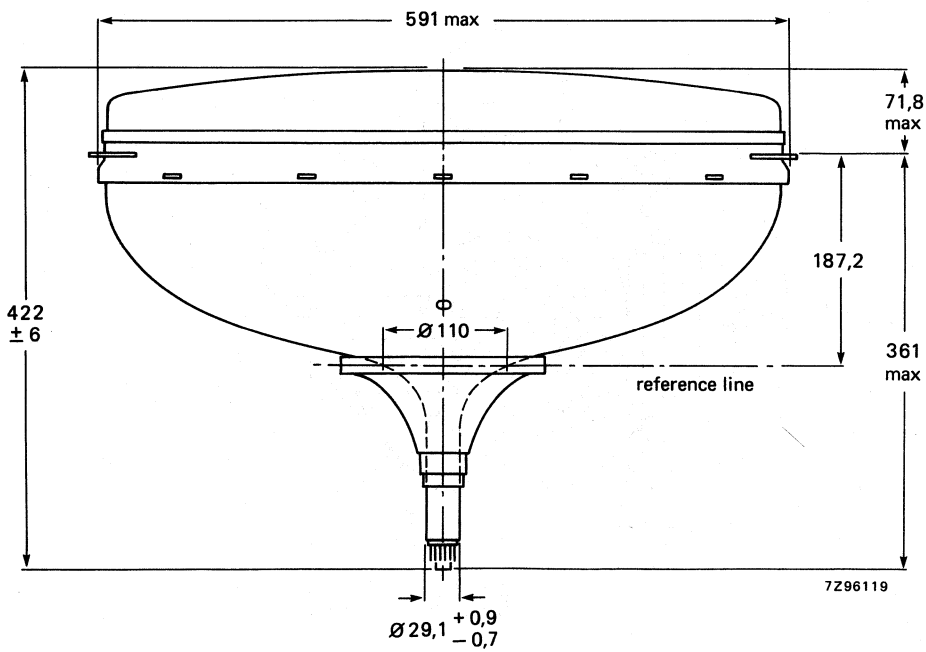

Net mass of tube assembly: 25,5 kg.

Fig. 1 Tube assembly.

Dimensions in mm

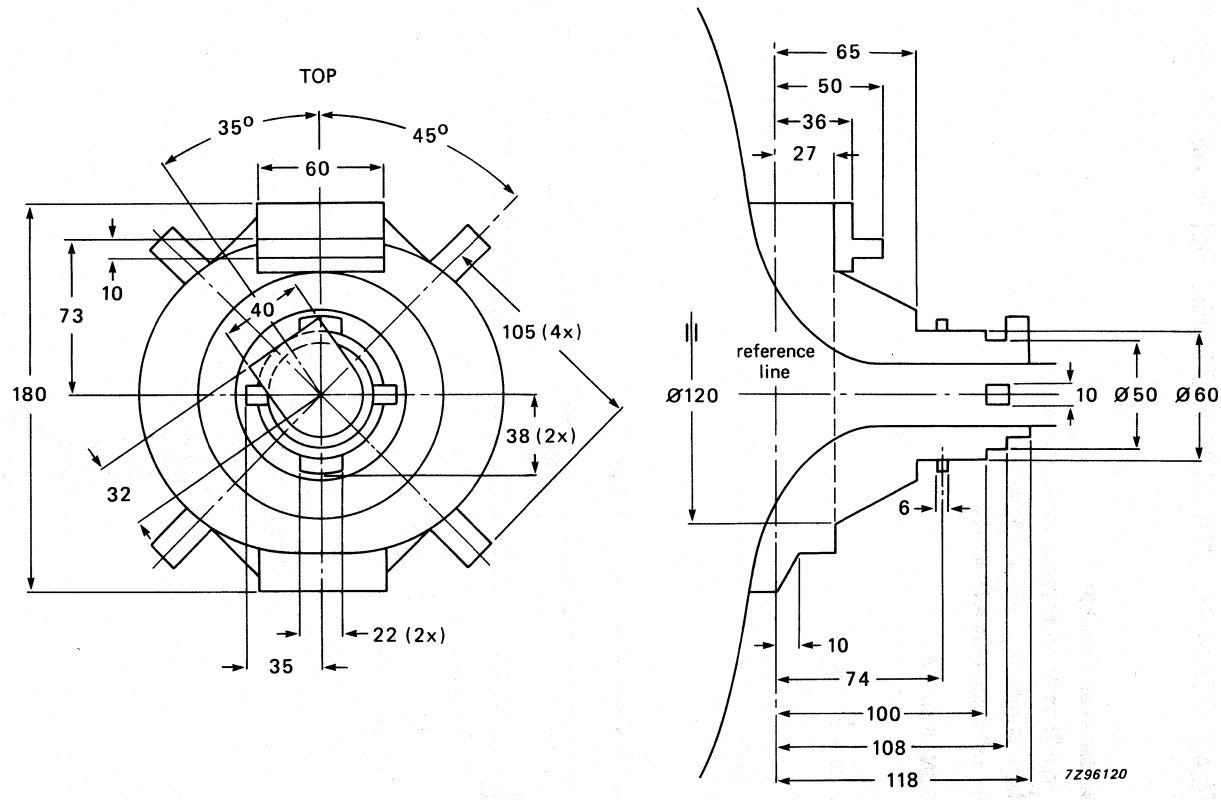

Fig. 2 Yoke clearance.

DEVELOPMENT DATA

ELECTRICAL DATA OF DEFLECTION UNIT

Line coils		parallel connected
	Inductance at 1 V (r.m.s.), 1 kHz	1,84 mH
	Resistance at 25 °C	1,78 Ω
	Magnetic flux	7,6 mWb ± 5%
	Line deflection current, edge to edge, at 25 kV	4,23 A (p-p)
Field coils		series connected
	Inductance at 1 V (r.m.s.), 1 kHz	10,7 mH
	Resistance at 25 °C	6,2 Ω
	Field deflection current, edge to edge, at 25 kV	1,76 A (p-p)

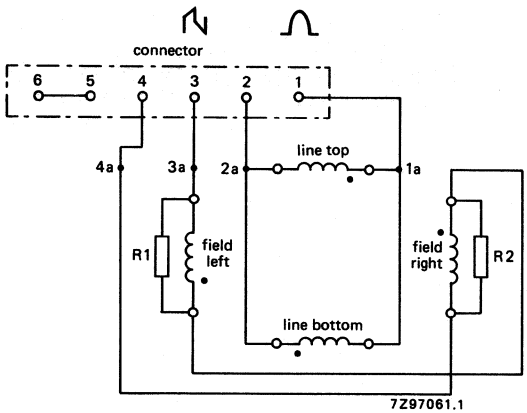

Fig. 3 Electrical diagram.
The beginning of the windings is indicated with ●.
R1 = R2 = 100 Ω, 0,25 W.
Matching Stocko connector MKF2806-1-0-606

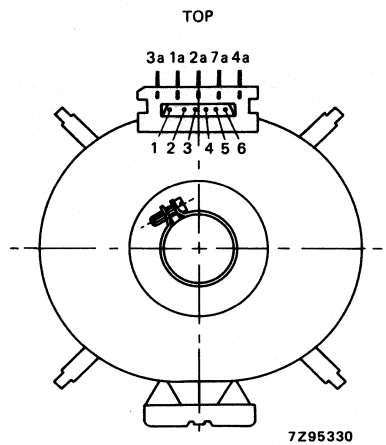

Fig. 4 Terminal location.

FLAT SQUARE BLACK MATRIX COLOUR PICTURE TUBE

- Flat and square screen
- 110° deflection
- In-line, hi-bi potential OLF*-ART** gun with quadrupole lens
- 29.1 mm neck diameter
- Black matrix technology
- Pigmented phosphors
- Impregnated quick-heating cathodes
- Slotted shadow mask optimized for minimum moiré at 625 and 525 lines systems
- Internal magnetic shield
- Reinforced envelope for re-entrant mounting

QUICK REFERENCE DATA

Deflection angle	110°
Minimum useful screen diagonal	78 cm
Overall length	49 cm
Neck diameter	29.1 mm
Heating	6.3 V, 575 mA
Anode voltage	27.5 kV
Focusing voltage	27% of anode voltage

* Overlapping field lens.
** Aberration reducing triode.

ELECTRICAL DATA

Electron guns with unitized grids	centre beam: green outside beams: red and blue
Heater current at 6.3 V	0.575 A
Focusing method	electrostatic
Focus lens	bi-potential
Convergence correction method	magnetic
Deflection method	magnetic
Deflection angles (approx.)	
diagonal	110°
horizontal	93°
vertical	74°
Direct interelectrode capacitances	
grid 1 to all other electrodes	21 pF
all cathodes to all other electrodes	15 pF
grid 3 to all other electrodes	3.8 pF
external conductive coating (including tension-band) to anode	max. 3600 pF min. 3000 pF

OPTICAL DATA

Screen	
type	metal-backed, vertical line tricolour phosphors
matrix	black opaque material negative guardband type
phosphors	red: rare earth, pigmented; green: sulphide; blue: sulphide, pigmented
persistence	medium short

colour co-ordinates	x	y
red	0.628	0.346
blue	0.306	0.599
green	0.150	0.070

horizontal spacing between centres of adjacent phosphor trios (approx.)	0.83 mm
array	vertical line trios
Faceplate	
light transmission at centre (approx.)	47.5%
surface	high gloss

DEVELOPMENT DATA

MECHANICAL DATA

Tube dimensions	
overall length	491.4 ± 6.5 mm
greatest dimensions of tube (excluding lugs)	
diagonal	842.4 ± 2.4 mm
width	699.8 ± 2.4 mm
height	554.1 ± 2.4 mm
Useful screen dimensions (projected)	
diagonal	min. 785 mm
horizontal axis	min. 634 mm
vertical axis	min. 474 mm
Sagittal heights	see Table 1
Positional accuracy of the screen with respect to the glass contour	see Fig. 11
Base and pin connection designation (see Note 1)	EIA No. B10-277-AB
Anode contact	EIA No. J1-21
Pin position alignment	
angle between pin 1 and vertical centre line (approx.)	39°
Operating position	horizontal, anode contact on top
Weight (approx.)	41 kg (90.39 lb)
Internal magnetic shield	built-in
Implosion protection	tension-band type
Mounting	lugs at corners

MAXIMUM AND MINIMUM RATINGS, ABSOLUTE MAXIMUM VALUES

Note: Voltages are with respect to grid 1 unless otherwise specified.

Anode voltage	max. 29.9 kV min. 20 kV
Total anode current	
long-term average	max. 1300 μA
short-term average	max. 1800 μA
Focusing electrode (grid 3) voltage	max. 10 kV
Peak grid 2 voltage, including video signal voltage	max. 1.4 kV
Cathode voltage	
positive bias value	max. 400 V
positive operating cut-off value	max. 175 V
negative bias value	max. 0 V
negative peak value	max. 2 V
Heater voltage (AC or DC between heater terminals) under operating conditions	max. 6.6 V min. 6.0 V
Peak heater to cathode voltage	see Note 2
Heater negative with respect to cathode	
during equipment warm-up period not exceeding 15 s	max. 385 V
after equipment warm-up period	max. 275 V
Heater positive with respect to cathode	max. 0 V

EQUIPMENT DESIGN VALUES

Note: Voltages are with respect to grid 1 unless otherwise specified.

Focusing electrode (grid 3) voltage	25.6% to 28.8% of anode voltage
Control voltage for extinction of focused spot	see Fig. 1
Maximum ratio of cathode spot cut-off voltages, highest gun to lowest gun in any tube	max. 1.25
Heater voltage under operating conditions	6.3 V (see Note 3)
Focusing electrode (grid 3) current	−2 to + 2 μA
Grid 2 current	−2 to + 2 μA
Grid 1 current	−2 to + 2 μA
To produce white light of 6500K+7MPCD (CIE co-ordinates x = 0.313, y = 0.329) percentage of total anode current supplied by each beam (typical)	red 41 green 35 blue 24
ratio of anode currents	min. max.
red/green	0.9 1.5
red/blue	1.4 2.0
blue/green	0.4 1.0
Displacements, measured at the centre of the screen raster centring displacement*	horizontal max. ± 5.0 mm vertical max. ± 6.5 mm
Insulation resistance between each cathode and grid 1 and heater	min. 10 MΩ

TYPICAL OPERATING CONDITIONS

Note: Voltages are with respect to grid 1 unless otherwise specified.

Anode voltage	27.5 kV
Focusing electrode (grid 3) voltage	7.04 to 7.92 kV
Grid 2 voltage for visual extinction of focused spot when circuit design utilizes cathode voltage of 160 V	780 V to 1.2 kV
Cathode voltage (positive operating cut-off value) highest cut-off voltage among the 3 guns	160 V
Heater voltage (AC or DC between heater terminals) under operating conditions	6.3 V (see Note 3)
Luminance at the centre of the screen**	90 cd/m^2

* The measurements should be performed with the tube facing east, with the earth's magnetic field as the northern hemisphere vertical component, 0.4 gauss, and the horizontal component 0.19 gauss.

** Tube settings adjusted to produce white (CIE co-ordinates x = 0.313, y = 0.329), focused raster, current density 0.4 μA/cm^2.

LIMITING CIRCUIT VALUES

1. High voltage circuits

   In order to minimize the possibility of damage to the tube caused by a momentary internal arc, it is recommended that the high voltage/grid 3 voltage power supplies be of the limited energy type, in which short-circuit current does not exceed 20 mA.

Grid 3 circuit resistance	max. 70 MΩ

2. Low voltage circuits

Effective grid 1 to cathode circuit resistance	max. 0.75 MΩ

DEVELOPMENT DATA

Notes

1. The matching socket, including its associated physically attached hardware and circuitry, must not weight more than 450 g.
2. It is necessary to maintain the cathode potential slightly positive with respect to the heater. (Connect one heater end to the chassis, when the cathode is used with positive potential to the chassis, as in typical circuit design.)
3. To ensure good emission characteristics throughout the life of the tube, it is recommended to regulate the heater voltage at 6.3 V.

GENERAL CONSIDERATIONS

1. Tube Handling: The tube should be handled carefully at all times. Particular care should be taken to prevent damage to the seal area.
2. Impact: During handling and transportation, the tube should not be subjected to accelerations greater than 350 m/s^2 in any direction.
3. Grounding: The external conductive coating of the tube should be grounded with multiple contacts. Poor contact may cause local heating, resulting in tube leakage.
4. Flashover: With the high voltages used with this tube, internal flashovers may occur. These may destroy the cathodes and/or the circuit components of the tube. It is therefore necessary to provide protective elements, e.g. spark gaps for grids 1 to 3 and the cathode circuits. Preferably, these circuits should be connected to the outer conductive coating.
5. Operating Position: The tube should be operated with its axis horizontal and the anode contact on top.

WARNINGS

X-radiation

The picture tube does not emit X-radiation above 1 μSv/h when operated within its absolute maximum ratings.

Implosion Protection

The tube employs integral implosion protection and must be replaced with a tube of the same type number or a recommended replacement, to assure continued safety.

Shock Hazard

The high voltage at which the tube is operated can be very dangerous. Design of the equipment should include safeguards to prevent the user from coming into contact with the high voltage. Extreme care should be taken in the servicing of any high voltage circuit.

Caution must be exercised during the replacement or servicing of the tube, since a residual electrical charge may be contained in the high voltage capacitor formed by the external and internal conductive coatings of the tube funnel. To remove any undesirable residual high voltage charge from the tube, "bleed off" the charge by shorting the anode contact button, located in the tube funnel, to the external conductive coating through a suitable resistor before handling the tube. Discharging the high voltage to isolated metal parts such as cabinets and control brackets may produce a shock hazard.

Tube Handling

It is recommended to keep the tube within its protective box until the last moment before installation. It is also recommended to wear safety gloves and goggles with side shields during handling, as precautions against possible injury from flying glass should the tube break.

Warning Label

The warning label for the equipment should include the safety precautions specified for the tube.

MAGNETIC FIELD CONSIDERATION

It is not permissible to use any components that may generate a beam register variation greater than 5 μm at any part of the screen.

DEGAUSSING

The picture tube is provided with an internal magnetic shield. This shield and the shadow mask with its suspension system, may be provided with an automatic degaussing system consisting of two coils covering top and bottom cone parts.

For correct degaussing an initial magnetomotive force (MMF) of 625 ampere-turns is required in each of the coils. This MMF has to be gradually decreased by appropriate circuitry. To prevent beam landing disturbances by line frequency currents induced in the degaussing coils, these coils should be shunted by a capacitor of sufficiently high value. In the steady state, no significant MMF should remain in the coils ($<$ 0.25 ampere-turns).

In principle, degaussing should be made during "off" scanning period (especially, vertical scanning should be "off"). If degaussing is attempted during "on" scanning condition, beam register of the tube may be affected.

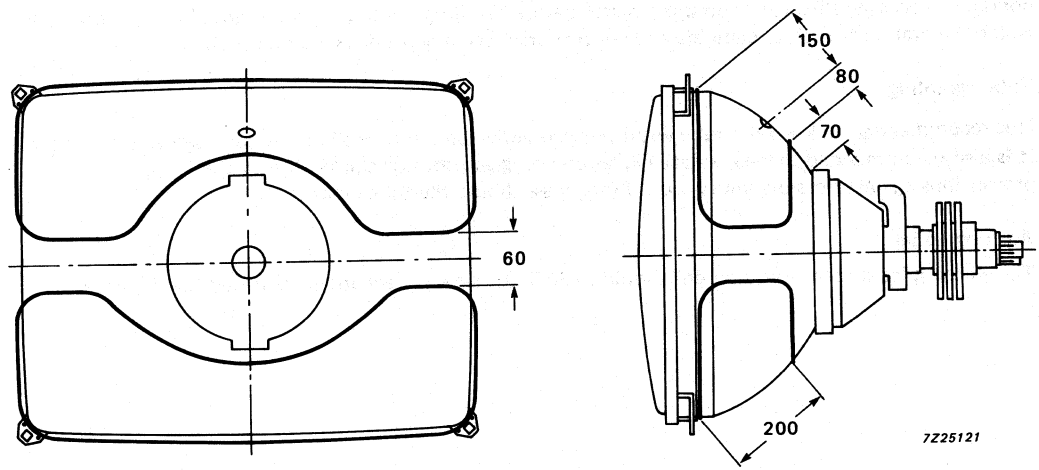

Fig. 1 Degaussing system.

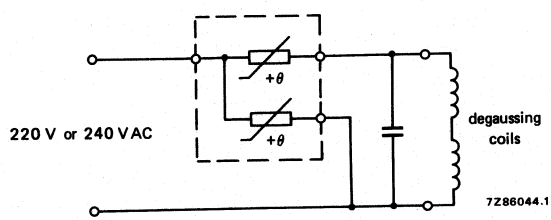

Fig. 2 Degaussing circuit.

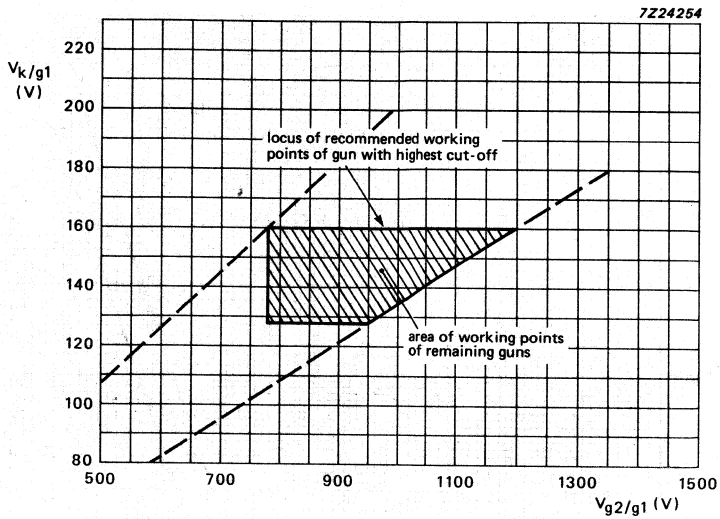

Fig. 3 Cut-off design chart.

Grid 2 voltage (V_{g2}) adjusted for highest gun spot cut-off voltage V_k = 160 V.

Remaining guns adjusted for spot cut-off by means of cathode voltage:

V_{g2} range 780 to 1200 V;

V_k range 128 to 160 V.

DEVELOPMENT DATA

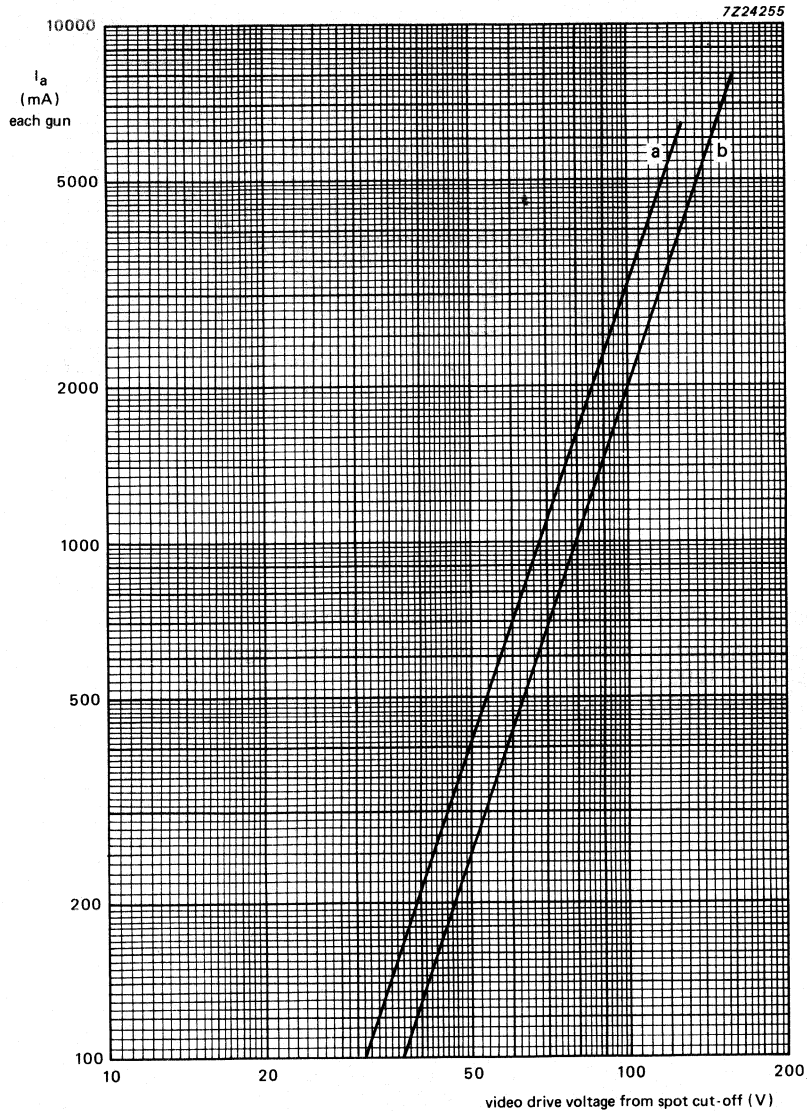

Fig. 4 Typical cathode drive characteristics.

V_f = 6.3 V;
$V_{a,g4}$ = 20 to 29.9 kV;
V_{g3} adjusted for focus;
V_{g2} (each gun) adjusted to provide spot cut-off for V_k = 128 V (curve a), and V_k = 160 V (curve b).

Dimensions in mm

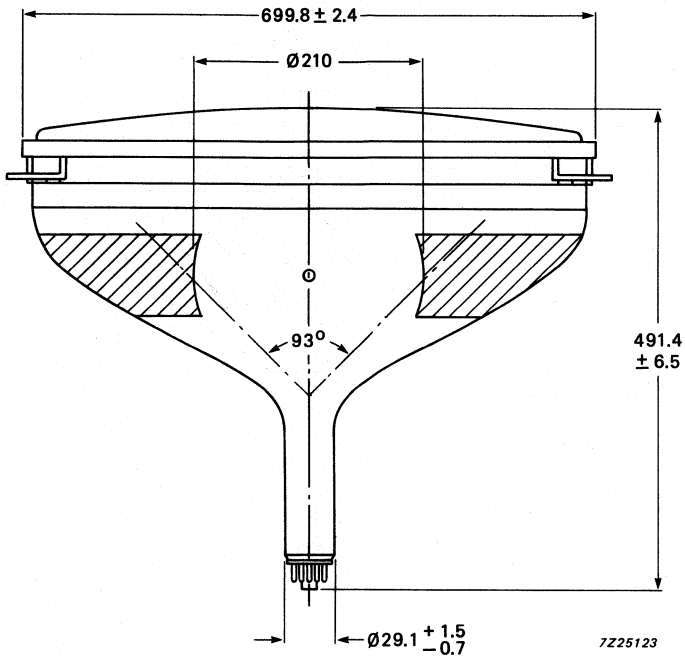

Fig. 5

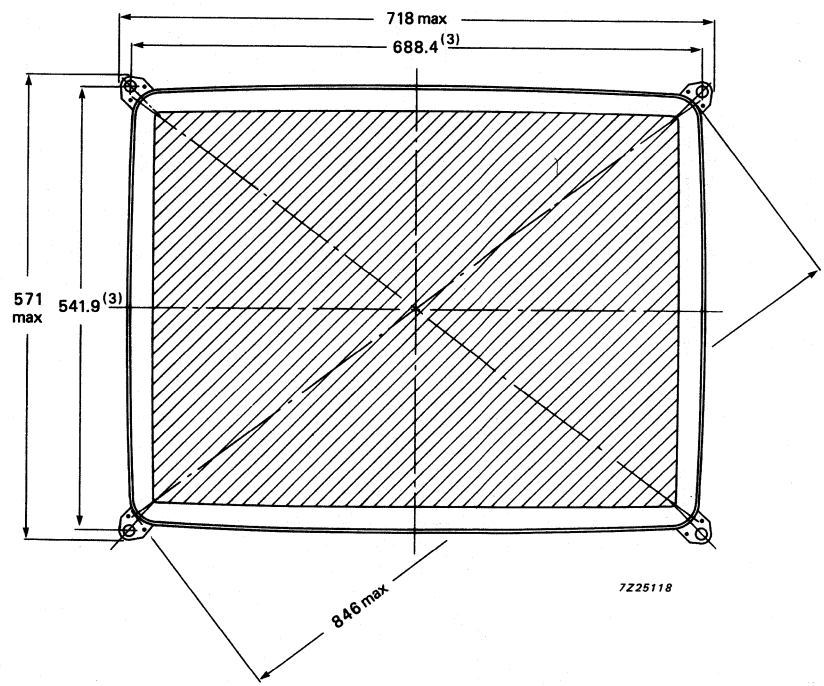

Fig. 6

DEVELOPMENT DATA

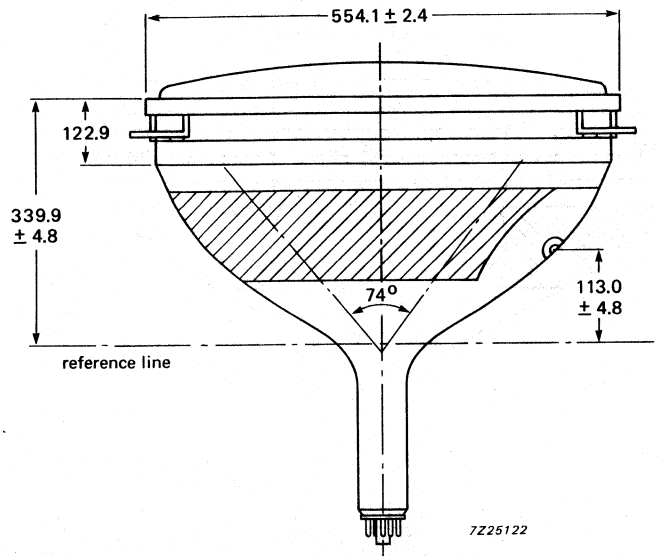
554.1 ± 2.4
122.9
339.9
± 4.8
74°
113.0
± 4.8
reference line
7Z25122

Fig. 7

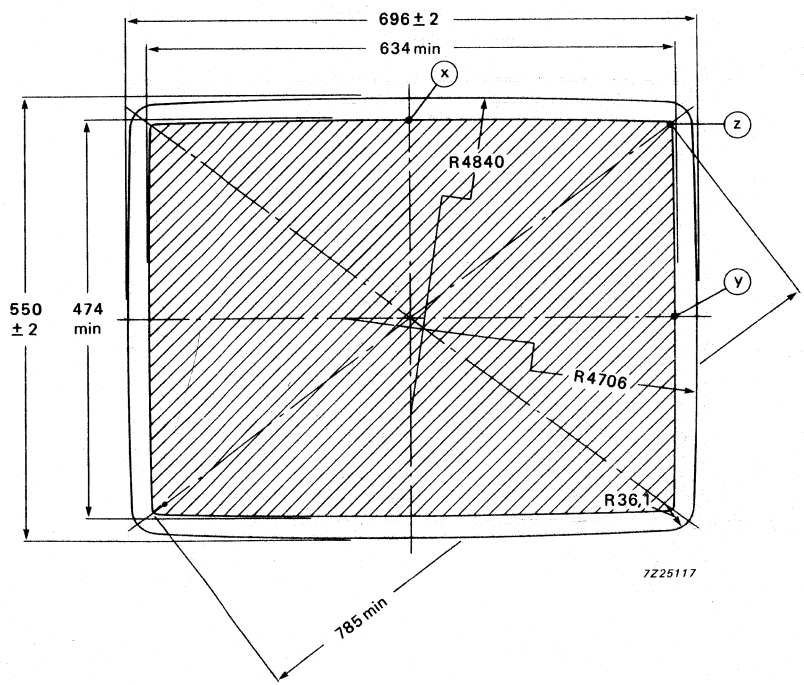
696 ± 2
634 min
X
Z
R4840
Y
550
± 2
474
min
R4706
R36,1
7Z25117
785 min

Fig. 8

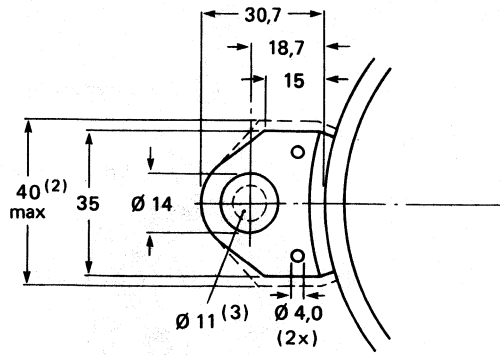

Fig. 9 Lug dimensions.

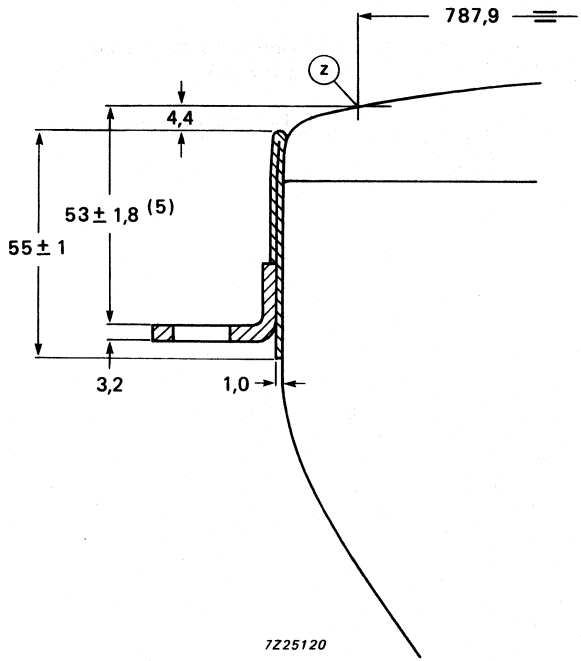

Fig. 10 Lug position.

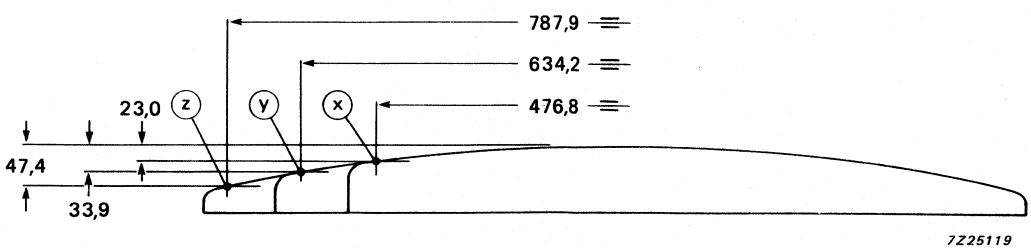

Fig. 11 Screen reference points.

DEVELOPMENT DATA

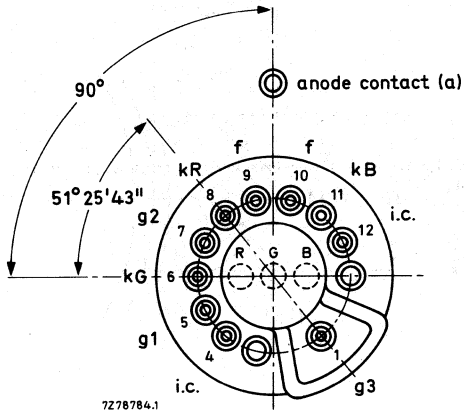

i.c. = internally connected (not to be used).

Fig. 12 Pin arrangement.

Notes to outline drawings

1. The displacement of any lug with respect to the plane through the three other lugs is max. 1.0 mm.
2. Minimum space to be reserved for mounting lug.
3. The position of the mounting screw in the cabinet must be within a circle of 10.5 mm diameter drawn around the true geometrical positions, i.e. the corners of a rectangle of 688.4 mm x 514.9 mm.
4. The socket for this base must not be rigidly mounted; it should have flexible leads and be allowed to move freely. After mounting of the tube in the cabinet note that the position of the base can fall within a circle, having a diameter of max. 55 mm, concentric with an imaginary tube axis.

Table 1 Sagittal heights with reference to screen centre at the edge of the minimum useful screen

co-ordinates		sagittal height
x mm	y mm	
0.000*	237.000	22.739
20.000	236.996	22.835
40.000	236.983	23.098
60.000	236.963	23.558
80.000	236.934	24.242
100.000	236.897	25.152
120.000	236.851	26.272
140.000	236.798	27.580
160.000	236.736	29.060
180.000	236.666	30.710
200.000	236.587	32.540
220.000	236.501	34.564
240.000	236.406	36.801
260.000	236.302	39.267
280.000	236.191	41.974
300.000	236.071	44.933
313.630**	235.985	47.098
314.071	220.000	45.168
314.580	200.000	43.057
315.039	180.000	41.261
315.451	160.000	39.743
315.814	140.000	38.456
316.129	120.000	37.348
316.395	100.000	36.372
316.613	80.000	35.506
316.782	60.000	34.764
316.903	40.000	34.206
316.976	20.000	33.901
317.000▲	0.000	33.832

* Point X
** Diagonal
▲ Point Y

DEVELOPMENT DATA

A = 256.0 mm
B = 346.4 mm
C = 174.0 mm
D = 269.9 mm
E = 24.1 mm

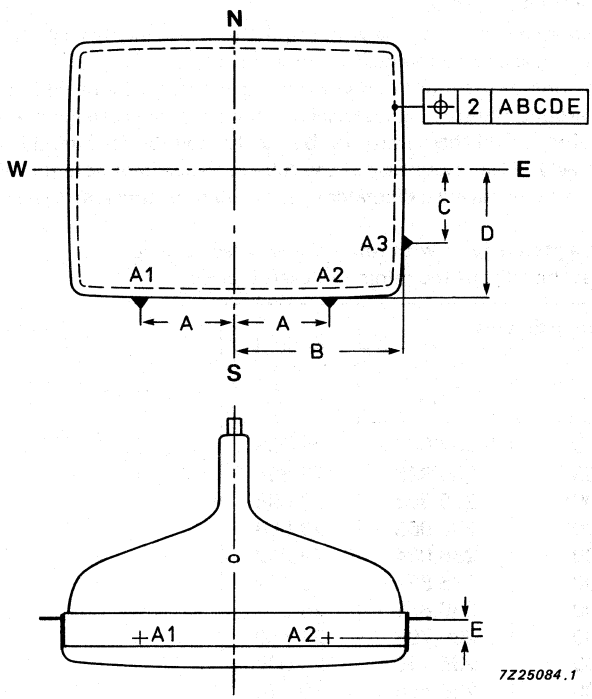

Fig. 13 Tube alignment.

COLOUR PICTURE TUBE ASSEMBLY

- Application – Colour TV
- Tube type – 78 cm, 110°, 29.1 mm neck diameter
- Electron gun – In-line, OLF-ART gun with quadrupole cathode lens
  Impregnated, quick-heating cathodes
- Base – B10-277
- Screen – Vertical line tricolour phosphors with black matrix
- Implosion protection – Tension-band type, with mounting lugs
- ITC – Factory preset deflection yoke and neck components
- Deflection yoke – KY 7496M1

CONSTRUCTION

The A78EBK03K01 is a direct-view, 78 cm, 110° colour picture tube assembly, consisting of an A78EBK03X in-line colour picture tube, a saddle-torroidal deflection yoke and a magnetic purity/convergence unit. It features self-convergence and integral tube components that provide optimum performance without dynamic convergence correction.

TUBE DATA

See tube datasheet A78EBK03X.

YOKE DATA

Yoke type	KY 7496M1
Electrical	
Horizontal deflection coils	
inductance (at 1 V RMS and 1 kHz)	1.50 mH ± 4%
resistance (at 20 °C)	2.1 Ω ± 10%
peak-to-peak deflection current (at 27.5 kV edge-to-edge scan, typical)	4.90 A (p-p)
Vertical deflection coils	
inductance (at 1 V RMS and 1 kHz)	12.8 mH ± 10%
resistance (at 20 °C)	6.4 Ω ± 7%*
peak-to-peak deflection current (at 27.5 kV edge-to-edge scan, typical)	1.71 A (p-p)*

* Including damping resistors.

Dielectrical Breakdown Tests

- peak voltage across horizontal coil (at 15.625 Hz for a pulse duration of 10 μs for 60 s) — max. 3 kV (p-p)
- peak voltage across vertical coil (at 50 Hz for a pulse duration of 600 μs for 60 s) — max. 500 V (p-p)
- AC voltage between horizontal and vertical coil (at 50 Hz for 60 s) — max. 3 kV RMS

properties	conditions	data
a. coupling	f = 500 Hz; E = 1 V	frame/line $\leqslant$ 1/50 (20 mV)
b. high voltage	line to frame 2 kV RMS; 50 Hz line to yoke-ring-spring-plate 2 kV RMS; 50 Hz frame to yoke-ring-spring-plate 300 V RMS; 50 Hz	 i $\leqslant$ 200 μA (leakage current) i $\leqslant$ 200 μA (leakage current) i $\leqslant$ 30 μA (leakage current)
c. insulation resistance at 1 kV DC	line to frame line to yoke-ring-spring frame to yoke-ring-spring	$\geqslant 500 \times 10^6\ \Omega$ $\geqslant 500 \times 10^6\ \Omega$ $\geqslant 10 \times 10^6\ \Omega$

DEVELOPMENT DATA

Notes

1. This tube assembly datasheet is to be used in conjunction with the datasheet for colour picture tube A78EBK03X.
2. The landing and convergence adjustments have been preset, with earth's magnetic field as the northern hemisphere vertical component, 0.4 gauss, and the horizontal component 0.19 gauss.
3. In order to preserve the preset adjustments, take care not to hold the tube by any of the mounted components or their fixings during handling and installation.

Outline of tube components

Dimensions in mm

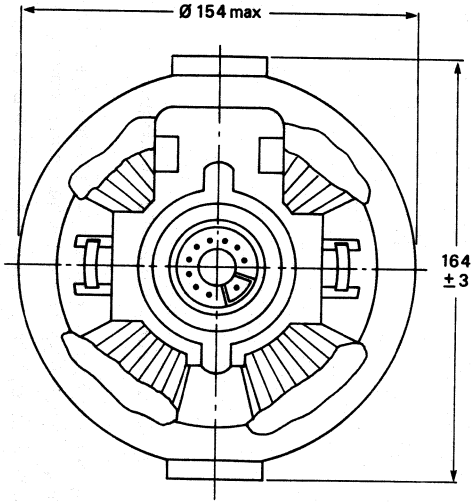

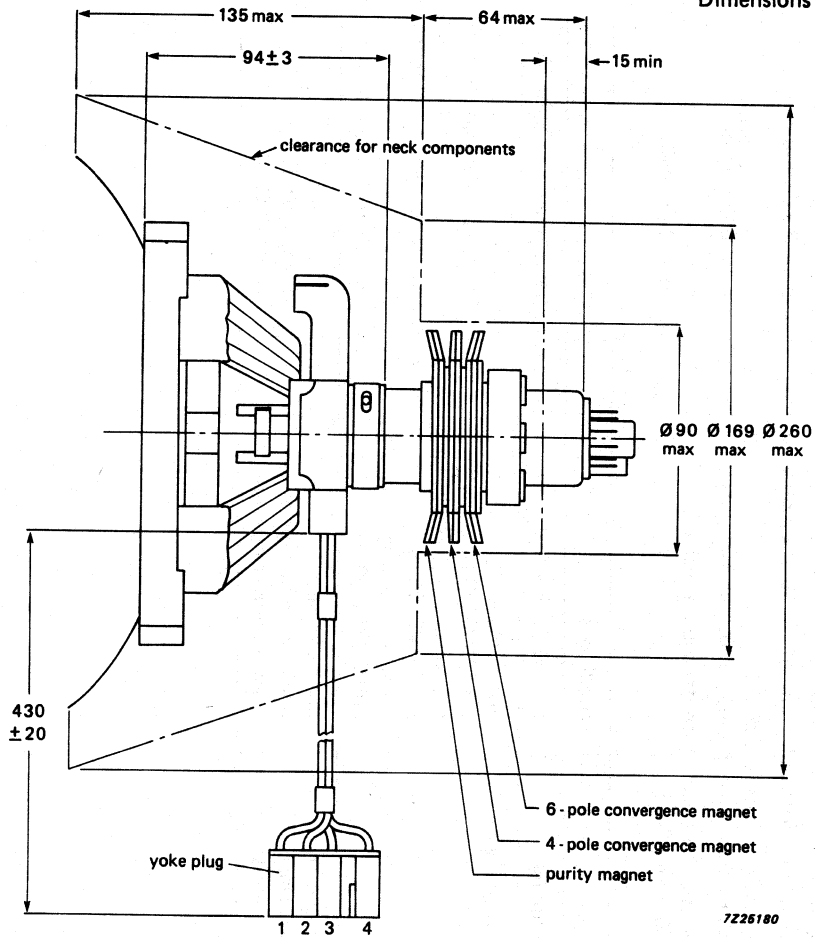

Deflection Yoke: KY 7469M1
Purity/Static Convergence
Magnet Assembly: TLC 2024-2S

Housing: Nippon Tanshi 2243-5104 or equivalent
Receptacle: Nippon Tanshi 17181-1 or equivalent

Fig. 1 Deflection yoke KY 7496M1.

Electrical Polarity

Horizontal and vertical coils are positioned so that the electron-beams are deflected towards the top left of the picture, where pin numbers 1 and 4 potentials are positive with respect to those of pin numbers 3 and 2, respectively.

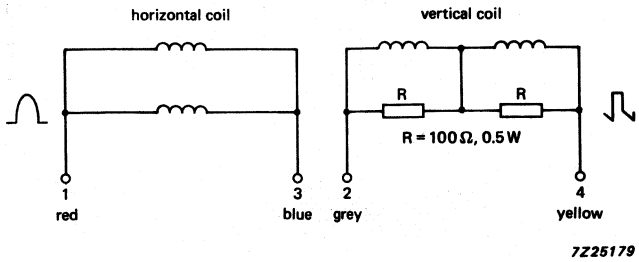

Fig. 2 Connection diagram for yoke.

DEVELOPMENT DATA

FLAT SQUARE BLACK MATRIX COLOUR PICTURE TUBE

- Flat and square screen
- 110° deflection
- In-line, hi-bi potential OLF*-ART** gun with quadrupole lens
- 29.1 mm neck diameter
- Black matrix technology
- Pigmented phosphors
- Quick-heating cathodes
- Slotted shadow mask optimized for minimum moiré at 625 and 525 lines systems
- Internal magnetic shield
- Reinforced envelope for re-entrant mounting

QUICK REFERENCE DATA

Deflection angle	110°
Minimum useful screen diagonal	78 cm
Overall length	49 cm
Neck diameter	29.1 mm
Heating	6.3 V, 630 mA
Anode voltage	27.5 kV
Focusing voltage	27% of anode voltage

* Overlapping field lens.
** Aberration reducing triode.

ELECTRICAL DATA

Electron guns with unitized grids	centre beam: green outside beams: red and blue
Heater current at 6.3 V	0.575 A
Focusing method	electrostatic
Focus lens	bi-potential
Convergence correction method	magnetic
Deflection method	magnetic
Deflection angles (approx.)	
diagonal	110°
horizontal	93°
vertical	74°
Direct interelectrode capacitances	
grid 1 to all other electrodes	19 pF
all cathodes to all other electrodes	14 pF
grid 3 to all other electrodes	3.5 pF
external conductive coating (including tension-band) to anode	max. 3600 pF min. 3000 pF

OPTICAL DATA

Screen

type	metal-backed, vertical line tricolour phosphors
matrix	black opaque material negative guardband type
phosphors	red: rare earth, pigmented; green: sulphide; blue: sulphide, pigmented
persistence	medium short

colour co-ordinates	x	y
red	0.628	0.346
blue	0.306	0.599
green	0.150	0.070

horizontal spacing between centres of adjacent phosphor trios (approx.)	0.83 mm
array	vertical line trios

Faceplate

light transmission at centre (approx.)	47.5%
surface	high gloss

DEVELOPMENT DATA

MECHANICAL DATA

Tube dimensions	
overall length	491.4 ± 6.5 mm
greatest dimensions of tube (excluding lugs)	
diagonal	842.4 ± 2.4 mm
width	699.8 ± 2.4 mm
height	554.1 ± 2.4 mm
Useful screen dimensions (projected)	
diagonal	min. 785 mm
horizontal axis	min. 634 mm
vertical axis	min. 474 mm
Sagittal heights	see Table 1
Positional accuracy of the screen with respect to the glass contour	see Fig. 11
Base and pin connection designation (see Note 1)	EIA No. B10-277-AB
Anode contact	EIA No. J1-21
Pin position alignment	
angle between pin 1 and vertical centre line (approx.)	39°
Operating position	horizontal, anode contact on top
Weight (approx.)	41 kg (90.39 lb)
Internal magnetic shield	built-in
Implosion protection	tension-band type
Mounting	lugs at corners

MAXIMUM AND MINIMUM RATINGS, ABSOLUTE MAXIMUM VALUES

Note: Voltages are with respect to grid 1 unless otherwise specified.

Anode voltage	max. 29.9 kV min. 20 kV
Total anode current	
long-term average	max. 1200 μA
short-term average	max. 1500 μA
Focusing electrode (grid 3) voltage	max. 10 kV
Peak grid 2 voltage, including video signal voltage	max. 1.2 kV
Cathode voltage	
positive bias value	max. 400 V
positive operating cut-off value	max. 175 V
negative bias value	max. 0 V
negative peak value	max. 2 V
Heater voltage (AC or DC between heater terminals)	
under operating conditions	max. 6.6 V min. 5.7 V
Peak heater to cathode voltage	see Note 2
Heater negative with respect to cathode	
during equipment warm-up period not exceeding 15 s	max. 385 V
after equipment warm-up period	max. 275 V
Heater positive with respect to cathode	max. 0 V

EQUIPMENT DESIGN VALUES

Note: Voltages are with respect to grid 1 unless otherwise specified.

Focusing electrode (grid 3) voltage	25.6% to 28.8% of anode voltage
Control voltage for extinction of focused spot	see Fig. 1
Maximum ratio of cathode spot cut-off voltages, highest gun to lowest gun in any tube	max. 1.25
Heater voltage under operating conditions	6.3 V (see Note 3)
Focusing electrode (grid 3) current	−2 to + 2 μA
Grid 2 current	−2 to + 2 μA
Grid 1 current	−2 to + 2 μA
To produce white light of 6500K+7MPCD (CIE co-ordinates x = 0.313, y = 0.329) percentage of total anode current supplied by each beam (typical)	red 41 green 35 blue 24
ratio of anode currents	min. max.
red/green	0.9 1.5
red/blue	1.4 2.0
blue/green	0.4 1.0
Displacements, measured at the centre of the screen raster centring displacement*	horizontal max. ± 5.0 mm vertical max. ± 6.5 mm
Insulation resistance between each cathode and grid 1 and heater	min. 50 MΩ

TYPICAL OPERATING CONDITIONS

Note: Voltages are with respect to grid 1 unless otherwise specified.

Anode voltage	27.5 kV
Focusing electrode (grid 3) voltage	7.04 to 7.92 kV
Grid 2 voltage for visual extinction of focused spot when circuit design utilizes cathode voltage of 160 V	423 V to 883 V
Cathode voltage (positive operating cut-off value) highest cut-off voltage among the 3 guns	160 V
Heater voltage (AC or DC between heater terminals) under operating conditions	6.3 V (see Note 3)
Luminance at the centre of the screen**	90 cd/m²

* The measurements should be performed with the tube facing east, with the earth's magnetic field as the northern hemisphere vertical component, 0.4 gauss, and the horizontal component 0.19 gauss.

** Tube settings adjusted to produce white (CIE co-ordinates x = 0.313, y = 0.329), focused raster, current density 0.4 μA/cm².

LIMITING CIRCUIT VALUES

1. High voltage circuits

   In order to minimize the possibility of damage to the tube caused by a momentary internal arc, it is recommended that the high voltage/grid 3 voltage power supplies be of the limited energy type, in which short-circuit current does not exceed 20 mA.

Grid 3 circuit resistance	max. 70 MΩ

2. Low voltage circuits

Effective grid 1 to cathode circuit resistance	max. 0.75 MΩ

DEVELOPMENT DATA

Notes

1. The matching socket, including its associated physically attached hardware and circuitry, must not weight more than 450 g.
2. It is necessary to maintain the cathode potential slightly positive with respect to the heater. (Connect one heater end to the chassis, when the cathode is used with positive potential to the chassis, as in typical circuit design.)
3. To ensure good emission characteristics throughout the life of the tube, it is recommended to regulate the heater voltage at 6.3 V.

GENERAL CONSIDERATIONS

1. Tube Handling: The tube should be handled carefully at all times. Particular care should be taken to prevent damage to the seal area.
2. Impact: During handling and transportation, the tube should not be subjected to accelerations greater than 350 m/s^2 in any direction.
3. Grounding: The external conductive coating of the tube should be grounded with multiple contacts. Poor contact may cause local heating, resulting in tube leakage.
4. Flashover: With the high voltages used with this tube, internal flashovers may occur. These may destroy the cathodes and/or the circuit components of the tube. It is therefore necessary to provide protective elements, e.g. spark gaps for grids 1 to 3 and the cathode circuits. Preferably, these circuits should be connected to the outer conductive coating.
5. Operating Position: The tube should be operated with its axis horizontal and the anode contact on top.

WARNINGS

X-radiation

The picture tube does not emit X-radiation above 1 μSv/h when operated within its absolute maximum ratings.

Implosion Protection

The tube employs integral implosion protection and must be replaced with a tube of the same type number or a recommended replacement, to assure continued safety.

Shock Hazard

The high voltage at which the tube is operated can be very dangerous. Design of the equipment should include safeguards to prevent the user from coming into contact with the high voltage. Extreme care should be taken in the servicing of any high voltage circuit.

Caution must be exercised during the replacement or servicing of the tube, since a residual electrical charge may be contained in the high voltage capacitor formed by the external and internal conductive coatings of the tube funnel. To remove any undesirable residual high voltage charge from the tube, "bleed off" the charge by shorting the anode contact button, located in the tube funnel, to the external conductive coating through a suitable resistor before handling the tube. Discharging the high voltage to isolated metal parts such as cabinets and control brackets may produce a shock hazard.

Tube Handling

It is recommended to keep the tube within its protective box until the last moment before installation. It is also recommended to wear safety gloves and goggles with side shields during handling, as precautions against possible injury from flying glass should the tube break.

Warning Label

The warning label for the equipment should include the safety precautions specified for the tube.

MAGNETIC FIELD CONSIDERATION

It is not permissible to use any components that may generate a beam register variation greater than 5 μm at any part of the screen.

DEGAUSSING

The picture tube is provided with an internal magnetic shield. This shield and the shadow mask with its suspension system, may be provided with an automatic degaussing system consisting of two coils covering top and bottom cone parts.

For correct degaussing an initial magnetomotive force (MMF) of 625 ampere-turns is required in each of the coils. This MMF has to be gradually decreased by appropriate circuitry. To prevent beam landing disturbances by line frequency currents induced in the degaussing coils, these coils should be shunted by a capacitor of sufficiently high value. In the steady state, no significant MMF should remain in the coils ($<$ 0.25 ampere-turns).

In principle, degaussing should be made during "off" scanning period (especially, vertical scanning should be "off"). If degaussing is attempted during "on" scanning condition, beam register of the tube may be affected.

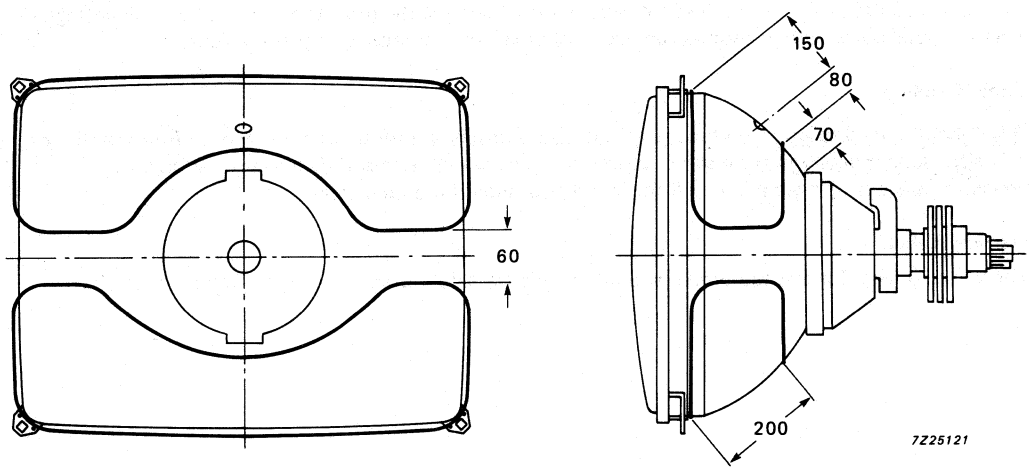

Fig. 1 Degaussing system.

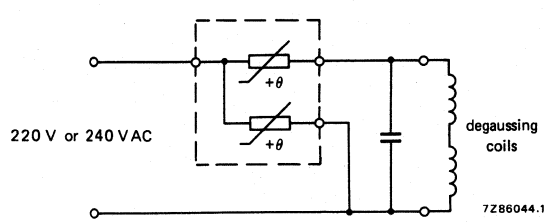

Fig. 2 Degaussing circuit.

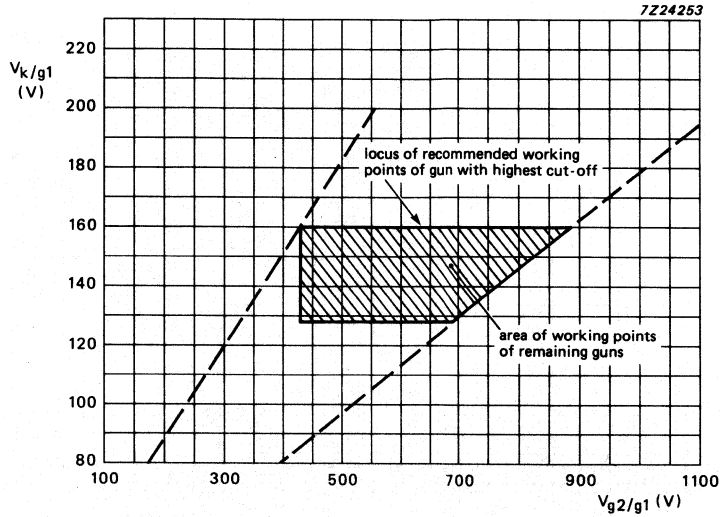

Fig. 3 Cut-off design chart.

DEVELOPMENT DATA

Grid 2 voltage (V_{g2}) adjusted for highest gun spot cut-off voltage V_k = 160 V.

Remaining guns adjusted for spot cut-off by means of cathode voltage:

V_{g2} range 423 to 883 V;

V_k range 128 to 160 V.

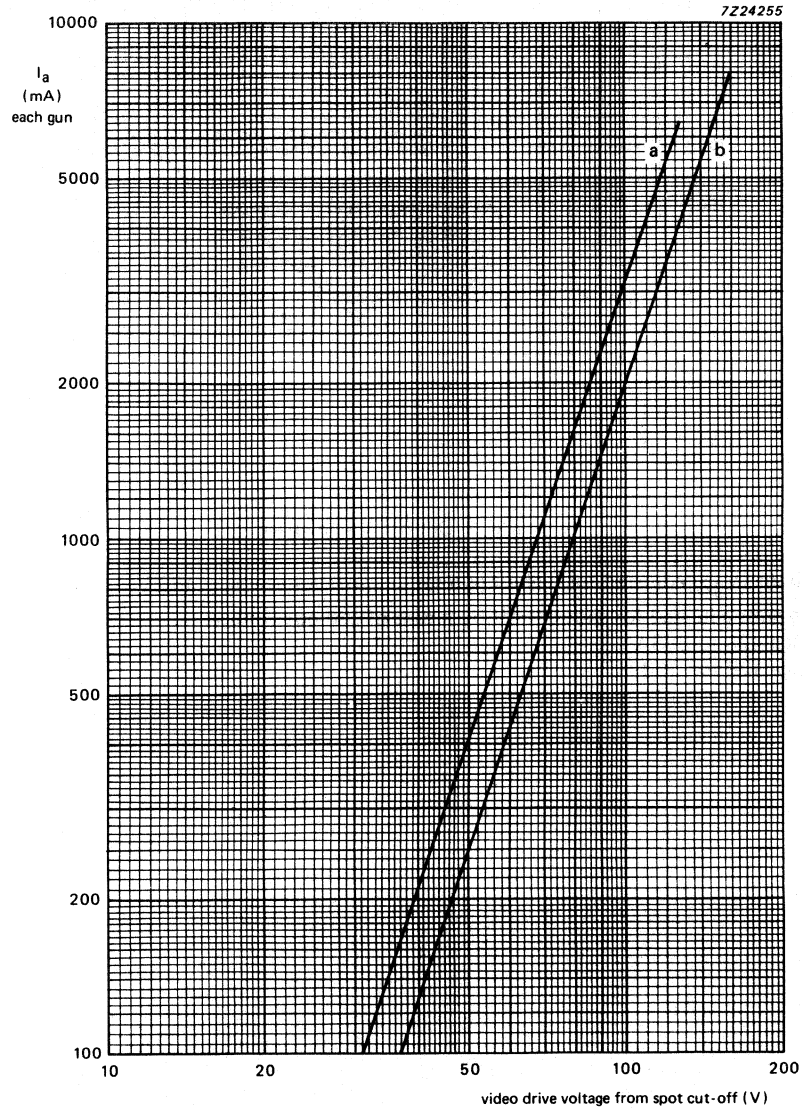

Fig. 4 Typical cathode drive characteristics.

V_f = 6.3 V;
$V_{a,g4}$ = 20 to 29.9 kV;
V_{g3} adjusted for focus;
V_{g2} (each gun) adjusted to provide spot cut-off for V_k = 128 V (curve a), and V_k = 160 V (curve b).

DEVELOPMENT DATA

Dimensions in mm

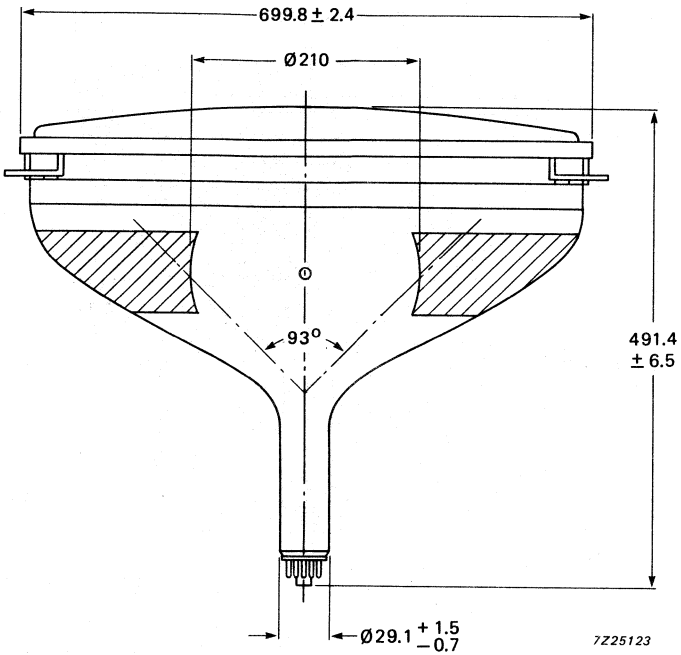

Fig. 5

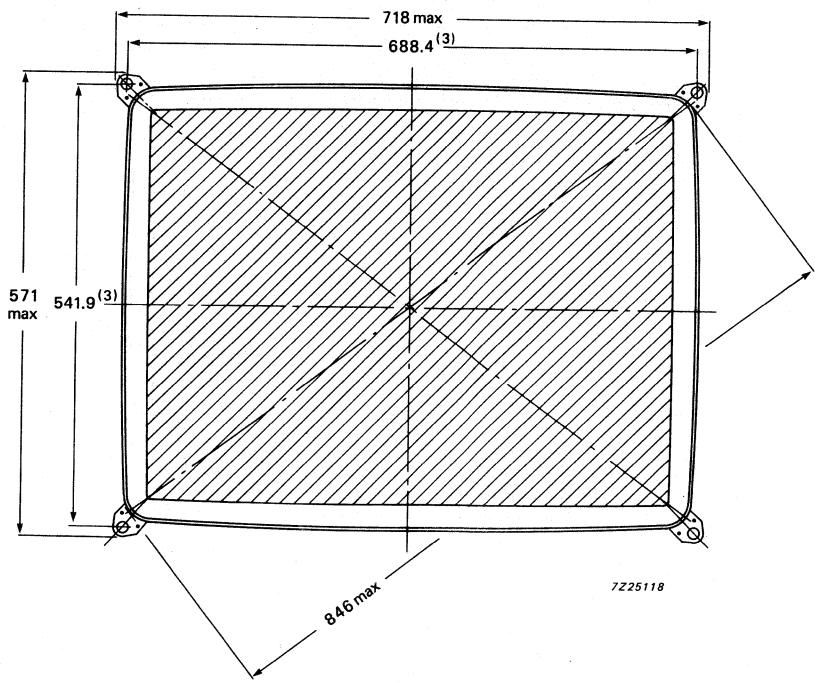

Fig. 6

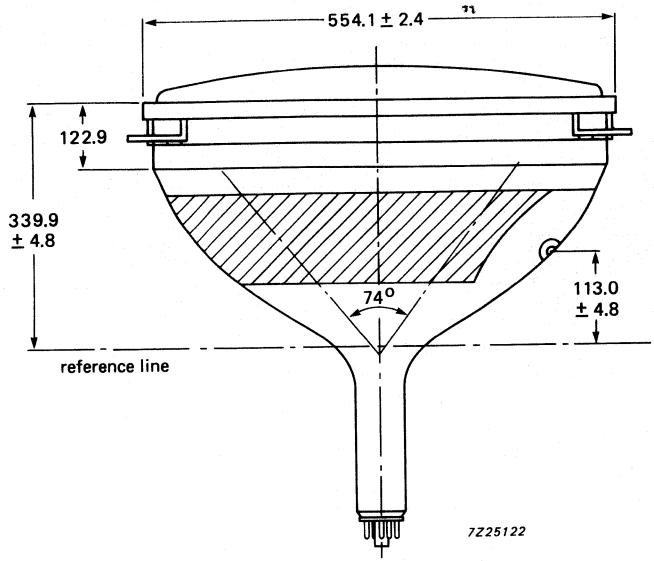
554.1 ± 2.4
122.9
339.9
± 4.8
74°
113.0
± 4.8
reference line
7Z25122

Fig. 7

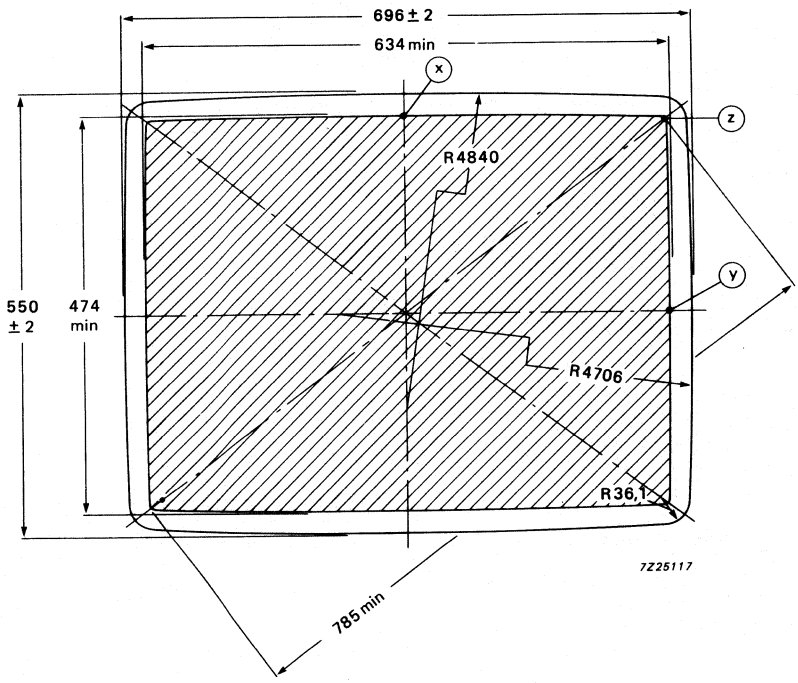
696 ± 2
634 min
x
z
y
R4840
550
± 2
474
min
R4706
R36,1
7Z25117
785 min

Fig. 8

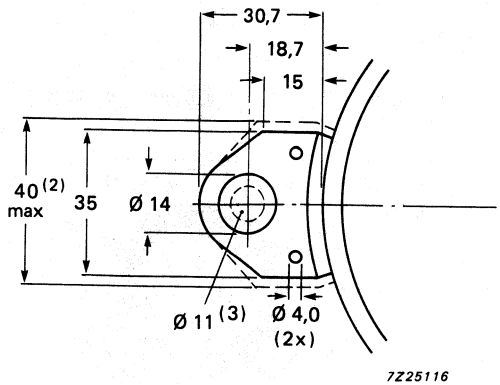

Fig. 9 Lug dimensions.

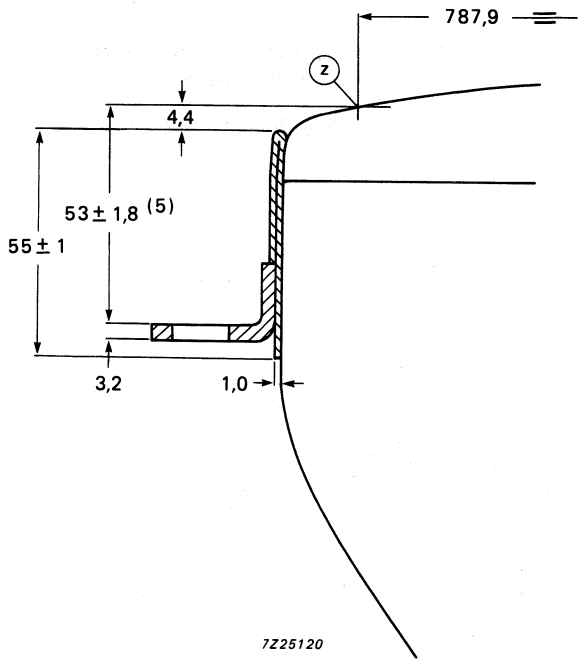

Fig. 10 Lug position.

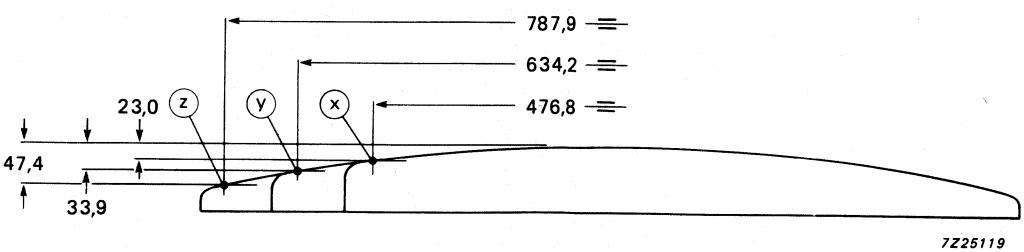

Fig. 11 Screen reference points.

DEVELOPMENT DATA

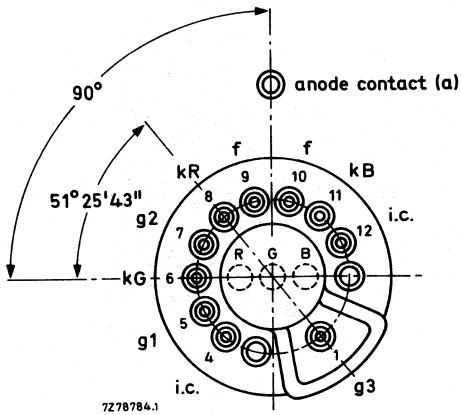

i.c. = internally connected
(not to be used).

Fig. 12 Pin arrangement.

Notes to outline drawings

1. The displacement of any lug with respect to the plane through the three other lugs is max. 1.0 mm.
2. Minimum space to be reserved for mounting lug.
3. The position of the mounting screw in the cabinet must be within a circle of 10.5 mm diameter drawn around the true geometrical positions, i.e. the corners of a rectangle of 688.4 mm x 514.9 mm.
4. The socket for this base must not be rigidly mounted; it should have flexible leads and be allowed to move freely. After mounting of the tube in the cabinet note that the position of the base can fall within a circle, having a diameter of max. 55 mm, concentric with an imaginary tube axis.

Table 1 Sagittal heights with reference to screen centre at the edge of the minimum useful screen

co-ordinates		sagittal height
x mm	y mm	
0.000*	237.000	22.739
20.000	236.996	22.835
40.000	236.983	23.098
60.000	236.963	23.558
80.000	236.934	24.242
100.000	236.897	25.152
120.000	236.851	26.272
140.000	236.798	27.580
160.000	236.736	29.060
180.000	236.666	30.710
200.000	236.587	32.540
220.000	236.501	34.564
240.000	236.406	36.801
260.000	236.302	39.267
280.000	236.191	41.974
300.000	236.071	44.933
313.630**	235.985	47.098
314.071	220.000	45.168
314.580	200.000	43.057
315.039	180.000	41.261
315.451	160.000	39.743
315.814	140.000	38.456
316.129	120.000	37.348
316.395	100.000	36.372
316.613	80.000	35.506
316.782	60.000	34.764
316.903	40.000	34.206
316.976	20.000	33.901
317.000▲	0.000	33.832

* Point X
** Diagonal
▲ Point Y

DEVELOPMENT DATA

A = 256.0 mm
B = 346.4 mm
C = 174.0 mm
D = 269.9 mm
E = 24.1 mm

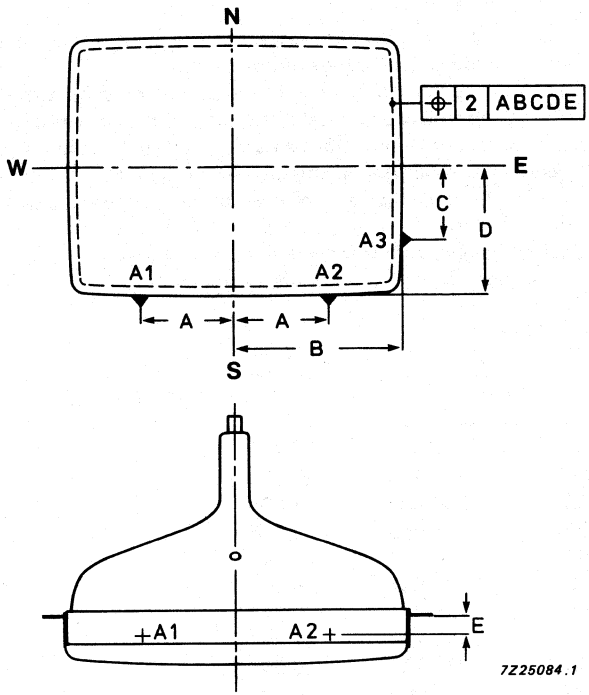

Fig. 13 Tube alignment.

COLOUR PICTURE TUBE ASSEMBLY

- Application – Colour TV
- Tube type – 78 cm, 110°, 29.1 mm neck diameter
- Electron gun – In-line, OLF-ART gun with quadrupole cathode lens
  Impregnated, quick-heating cathodes
- Base – B10-277
- Screen – Vertical line tricolour phosphors with black matrix
- Implosion protection – Tension-band type, with mounting lugs
- ITC – Factory preset deflection yoke and neck components
- Deflection yoke – KY 7496M1

CONSTRUCTION

The M78JUA98X01 is a direct-view, 78 cm, 110 ° colour picture tube assembly, consisting of an M78JUA98X in-line colour picture tube, a saddle-torroidal deflection yoke and a magnetic purity/convergence unit. It features self-convergence and integral tube components that provide optimum performance without dynamic convergence correction.

TUBE DATA

See tube datasheet M78JUA98X.

YOKE DATA

Yoke type	KY 7496M1
Electrical	
Horizontal deflection coils	
inductance (at 1 V RMS and 1 kHz)	1.50 mH ± 4%
resistance (at 20 °C)	2.1 Ω ± 10%
peak-to-peak deflection current (at 27.5 kV edge-to-edge scan, typical)	4.90 A (p-p)
Vertical deflection coils	
inductance (at 1 V RMS and 1 kHz)	12.8 mH ± 10%
resistance (at 20 °C)	6.4 Ω ± 7%*
peak-to-peak deflection current (at 27.5 kV edge-to-edge scan, typical)	1.71 A (p-p)*

* Including damping resistors.

Dielectrical Breakdown Tests

- peak voltage across horizontal coil (at 15.625 Hz for a pulse duration of 10 μs for 60 s) — max. 3 kV (p-p)
- peak voltage across vertical coil (at 50 Hz for a pulse duration of 600 μs for 60 s) — max. 500 V (p-p)
- AC voltage between horizontal and vertical coil (at 50 Hz for 60 s) — max. 3 kV RMS

properties	conditions	data
a. coupling	f = 500 Hz; E = 1 V	frame/line $\leqslant$ 1/50 (20 mV)
b. high voltage	line to frame 2 kV RMS; 50 Hz line to yoke-ring-spring-plate 2 kV RMS; 50 Hz frame to yoke-ring-spring-plate 300 V RMS; 50 Hz	 i $\leqslant$ 200 μA (leakage current) i $\leqslant$ 200 μA (leakage current) i $\leqslant$ 30 μA (leakage current)
c. insulation resistance at 1 kV DC	line to frame line to yoke-ring-spring frame to yoke-ring-spring	$\geqslant 500 \times 10^6\ \Omega$ $\geqslant 500 \times 10^6\ \Omega$ $\geqslant 10 \times 10^6\ \Omega$

DEVELOPMENT DATA

Notes

1. This tube assembly datasheet is to be used in conjunction with the datasheet for colour picture tube M78JUA98X.
2. The landing and convergence adjustments have been preset, with earth's magnetic field as the northern hemisphere vertical component, 0.4 gauss, and the horizontal component 0.19 gauss.
3. In order to preserve the preset adjustments, take care not to hold the tube by any of the mounted components or their fixings during handling and installation.

Outline of tube components

Dimensions in mm

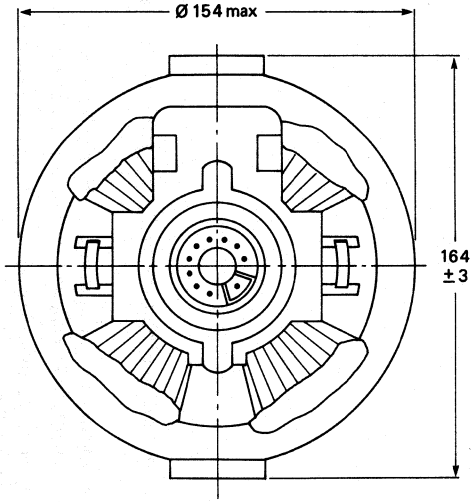

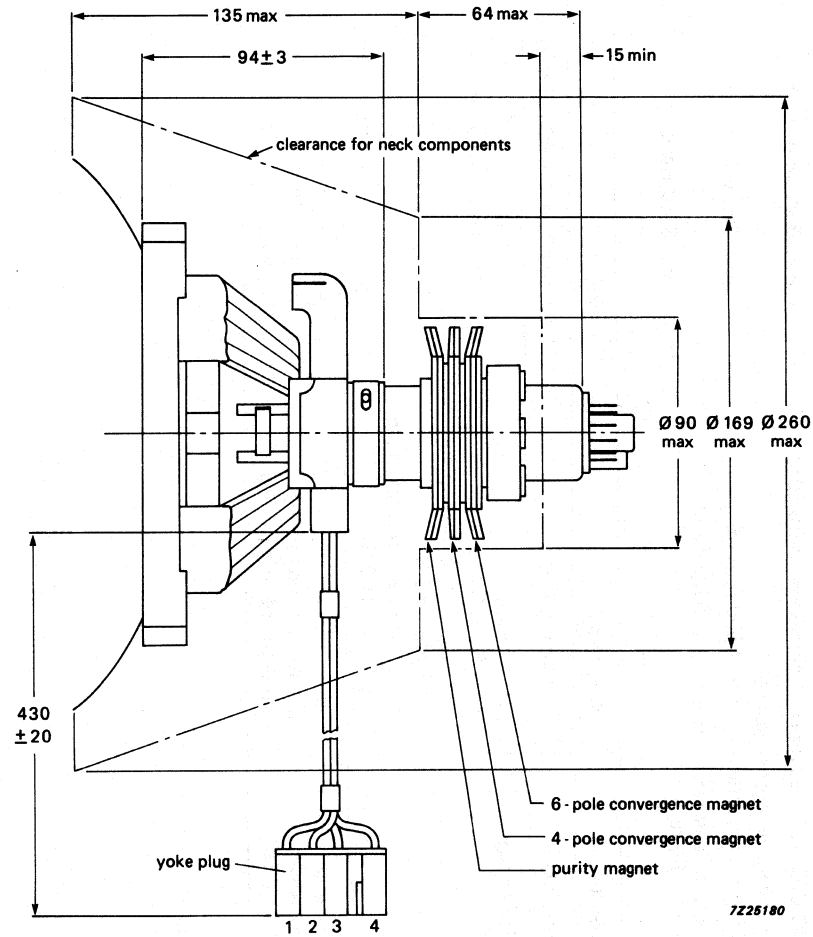

Deflection Yoke: KY 7469M1
Purity/Static Convergence
Magnet Assembly: TLC 2024-2S

Housing: Nippon Tanshi 2243-5104 or equivalent
Receptacle: Nippon Tanshi 17181-1 or equivalent

Fig. 1 Deflection yoke KY 7496M1.

Electrical Polarity

Horizontal and vertical coils are positioned so that the electron-beams are deflected towards the top left of the picture, where pin numbers 1 and 4 potentials are positive with respect to those of pin numbers 3 and 2, respectively.

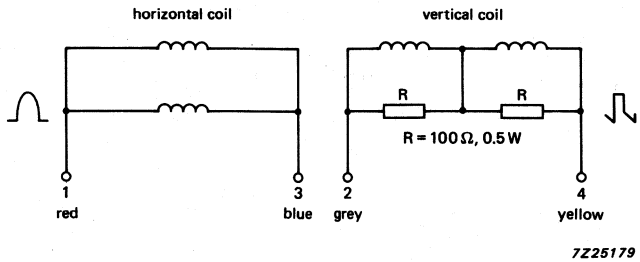

Fig. 2 Connection diagram for yoke.

DEVELOPMENT DATA

COLOUR TV PICTURE TUBES AND DEFLECTION UNITS - MAINTENANCE TYPES

SURVEY OF TUBES AND DEFLECTION UNITS

tube	deflection unit
A51-540X	AT1850
A56-540X	AT1860
A66-540X	AT1870

30AX COLOUR PICTURE TUBE

QUICK REFERENCE DATA

Deflection angle	110°
Face diagonal	51 cm
Overall length	36 cm
Neck diameter	36,5 mm
Envelope	reinforced; suitable for push-through
Magnetic shield	internal
Focusing	hi-bi potential
Deflection	magnetic
Heating	6,3 V, 720 mA
Light transmission of face glass	64%
Quick heating cathode	with a typical tube a legible picture will appear within approx. 5 s

Inherently self-converging system with deflection unit AT1850

MECHANICAL DATA

Overall length	361,4 ± 6 mm
Neck diameter	$36{,}5\ ^{+\ 1{,}3}_{-0}$ mm
Useful screen dimensions	
diagonal	min. 480,0 mm
horizontal axis	min. 404,4 mm
vertical axis	min. 303,3 mm
Base	12-pin base IEC 67-I-47a, type 2
Anode contact	cavity cap JEDEC J1-21, IEC 67-III-2

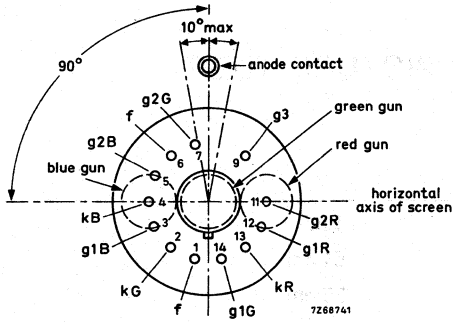

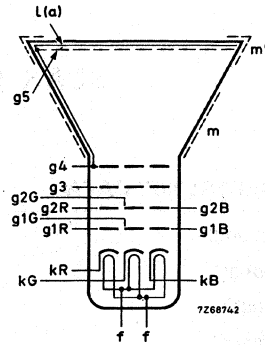

TYPICAL OPERATING CONDITIONS

The voltages are specified with respect to grid 1.

Final accelerator voltage	$V_{a,g5,g4}$	25 kV
Grid 3 (focusing electrode) voltage	V_{g3}	6,5 to 7,45 kV
Grid 2 voltage for a spot-cut-off voltage V_k = 140 V	V_{g2}	590 to 800 V
Cathode voltage for spot cut-off at V_{g2} = 630 V	V_k	120 to 150 V

DEFLECTION UNIT

QUICK REFERENCE DATA

Picture tube gun arrangement	in line
diagonal	51 cm (20 in)
neck diameter	36,5 mm
Deflection angle	110°
Line deflection current, edge to edge at 25 kV	4,90 A(p-p)
Inductance of line coils	1,53 mH
Resistance of field coils (damping resistor R1 included)	5,7 Ω

APPLICATION

This deflection unit has been designed for use with a 110° colour picture tube type A51-540X in CTV receivers in conjunction with e.g.:

diode-split line output transformer	AT2076/70A
line output transistor	BU208A
linearity control unit	AT4042/42

DESCRIPTION

The deflection unit consists of flangeless line and field coils, a one piece ferrite ring and a one piece coil carrier.

MECHANICAL DATA

Outlines

Dimensions in mm

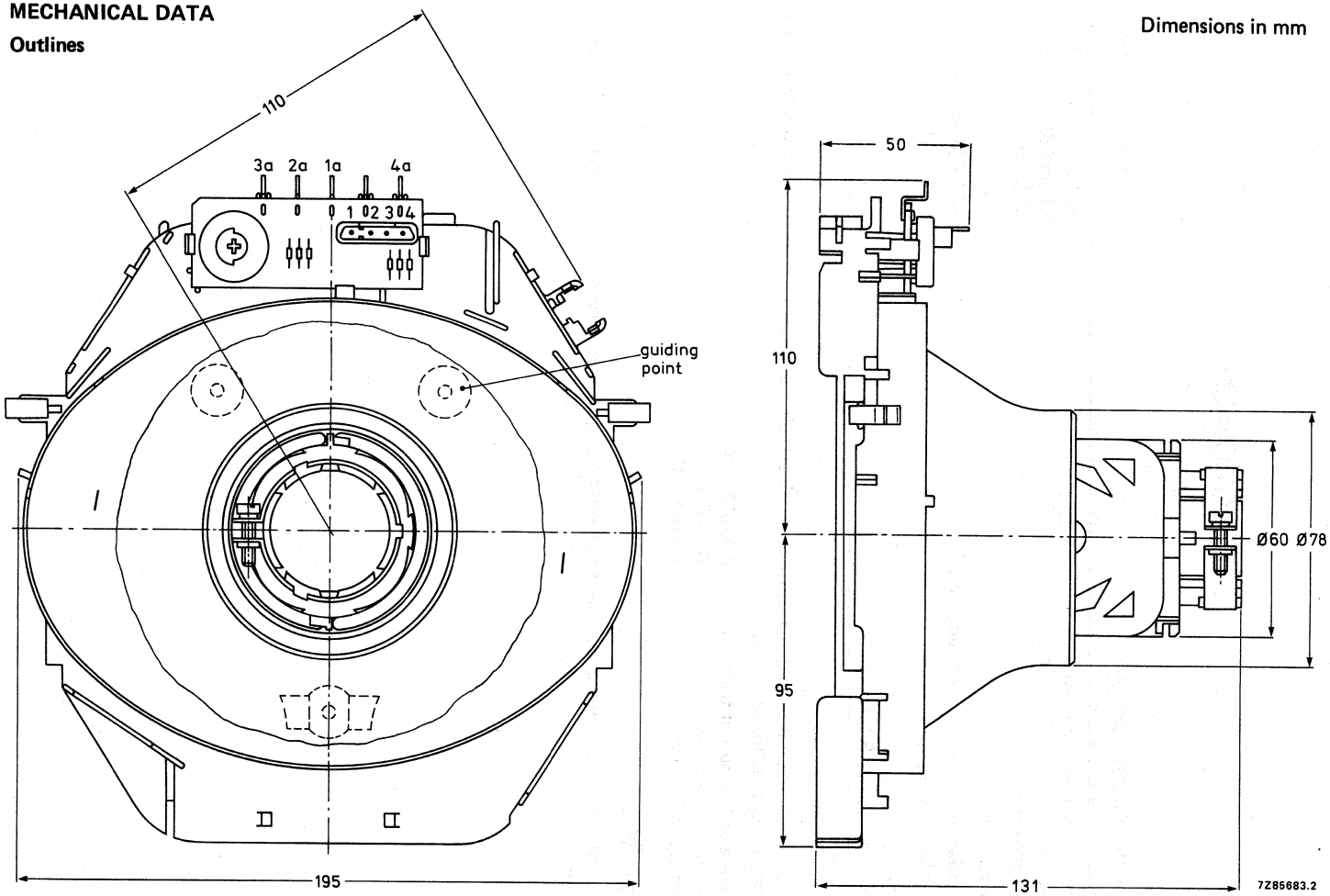

Fig. 1.

Mounting

The deflection unit can simply be pushed on the neck of a picture tube.

Both on the neck of the tube and on the deflection unit, there are 3 reference surfaces to establish angular and axial positioning.

Once the unit is mounted the combination is perfectly aligned and requires no further adjustment for static convergence, colour purity and raster orientation.

The unit must be pressed against the reference surfaces on the cone of the picture tube with a force of 20 ± 5 N and fixed by tightening the screw in the clamping ring at the rear with a torque of $1{,}0\ ^{+0{,}4}_{-0{,}2}$ Nm.

Maximum axial force exerted on the screw is 20 N.

ELECTRICAL DATA

Line coils	
inductance	1,53 mH ± 4%
resistance at 25 °C	1,3 Ω ± 10%
Magnetic flux at 25 kV	7,5 mWb ± 5%
Line deflection current edge to edge at 25 kV	4,90 A(p-p)
Field coils	
inductance	9,80 mH ± 10%
resistance at 25 °C (damping resistance R1 included)	5,7 Ω ± 7%
Field deflection current edge to edge at 25 kV	2,00 A(p-p)
Max. operating temperature	90 °C

Connections

(See also Fig. 1).

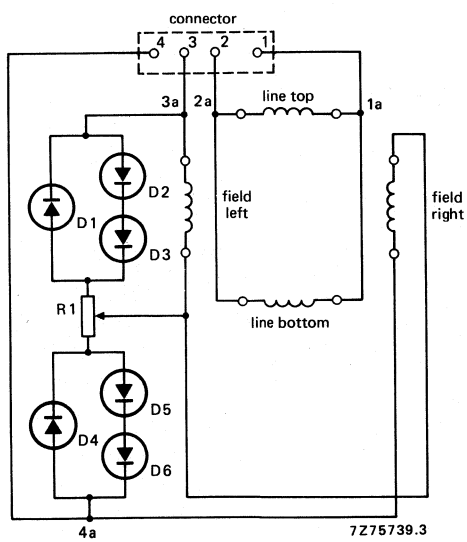

Fig. 2.

Matching female Stocko connector MKF 804-1-0-404.
D1 to D6 = BAS11, BAX18, BAX18A, BAV10 or BAW62.

R1 = 180 Ω.

30AX COLOUR PICTURE TUBE

- Automatic snap-in raster orientation
- Push-on axial purity positioning
- Internal magneto-static beam alignment
- Hi-Bi gun with quadrupole cathode lens
- Self-aligning, self-converging assembly with low power consumption, when combined with deflection unit AT 1860
- North-south pin-cushion distortion-free
- 110° deflection
- Hi-Bri screen
- Pigmented phosphors: enhanced contrast
- Phosphor lines follow glass contour
- In-line gun
- Standard 36,5 mm neck
- Soft-Flash technology
- Slotted shadow mask optimized for minimum moiré
- Fine pitch over entire screen
- Quick-heating cathodes
- Internal magnetic shield
- Anti-crackle coating
- Reinforced envelope for push-through mounting

QUICK REFERENCE DATA

Deflection angle	110°
Face diagonal	56 cm
Overall length	38 cm
Neck diameter	36,5 mm
Heating	6,3 V, 720 mA
Anode voltage	25 kV
Focusing voltage	28% of anode voltage

ELECTRON-OPTICAL DATA

Electron gun system	in line with separate grids
Focusing method	electrostatic
Focus lens	hi-bi potential
Deflection method	magnetic
Deflection angles	
diagonal	110°
horizontal	97°
vertical	77°

ELECTRICAL DATA

Capacitances			
anode to external conductive coating	$C_{a, g5, g4/m}$	>	1300 pF
anode to metal rimband	$C_{a, g5, g4/m'}$		250 pF
grid of any gun to all other electrodes	$C_{g\,1R}$, $C_{g\,1G}$, $C_{g\,1B}$		7 pF
cathodes of all guns (connected in parallel) to all other electrodes	C_k		12 pF
cathode of any gun to all other electrodes	C_{kR}, C_{kG}, C_{kB}		4 pF
grid 3 (focusing electrode) to all other electrodes	C_{g3}		7 pF
Resistance between rimband and external conductive coating		min.	50 MΩ
Heating: indirect by AC (preferably mains or line frequency) or DC			
heater voltage	V_f		6,3 V
heater current	I_f		720 mA

OPTICAL DATA

Screen	metal-backed vertical phosphor stripes; phosphor lines follow glass contour
Screen finish	satinized
Useful screen dimensions	
diagonal	min. 530,6 mm
horizontal axis	min. 444,2 mm
vertical axis	min. 334,2 mm
area	min. 1458 cm^2
Positional accuracy of the screen with respect to the glass contour	See Fig. 1
Phosphors	
red	pigmented europium activated rare earth sulphide type
green	
blue	pigmented sulphide type

A = 180,3 mm
B = 237,0 mm
C = 123,0 mm
D = 179,6 mm
E = 30,8 mm

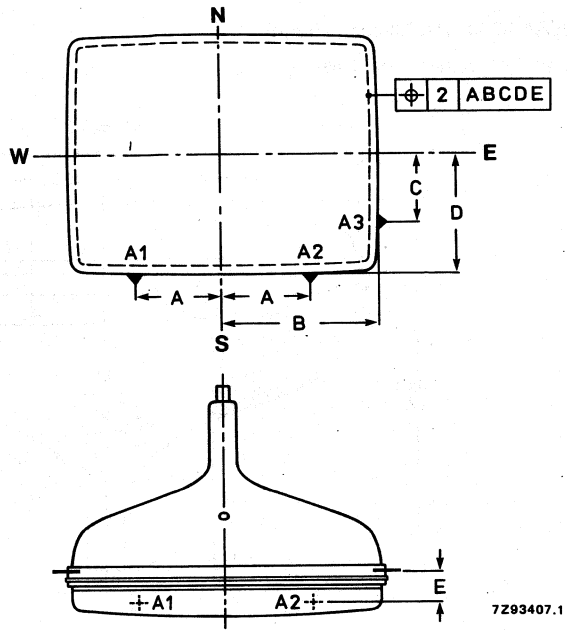

Fig. 1 Tube alignment.

		x	y
Colour co-ordinates			
red		0,635	0,340
green		0,315	0,600
blue		0,150	0,060
Centre-to-centre distance of identical colour phosphor stripes		approx. 0,8 mm	
Light transmission of face glass		64%	
Luminance at the centre of the screen	L	160 cd/m² *	

MECHANICAL DATA (see Figs 2 to 10)

Overall length	383,8 ± 6 mm
Neck diameter	$36{,}5\ ^{+\ 1{,}3}_{-\ 0}$ mm
Base	12-pin base IEC 67-I-47a, type 2
Anode contact	cavity cap JEDEC J1-21, IEC 67-III-2
Mounting position	anode contact on top
Rimband	provided with 18 slots to accommodate clips for mounting of degaussing coils
Net mass	approx. 14,5 kg

Handling

During shipment and handling the tube should not be subjected to accelerations greater than 350 m/s² in any direction.

* Tube settings adjusted to produce white D (x = 0,313, y = 0,329), focused raster, current density 0,4 μA/cm².

MECHANICAL DATA (continued)

Dimensions in mm

Notes are given after the drawings.

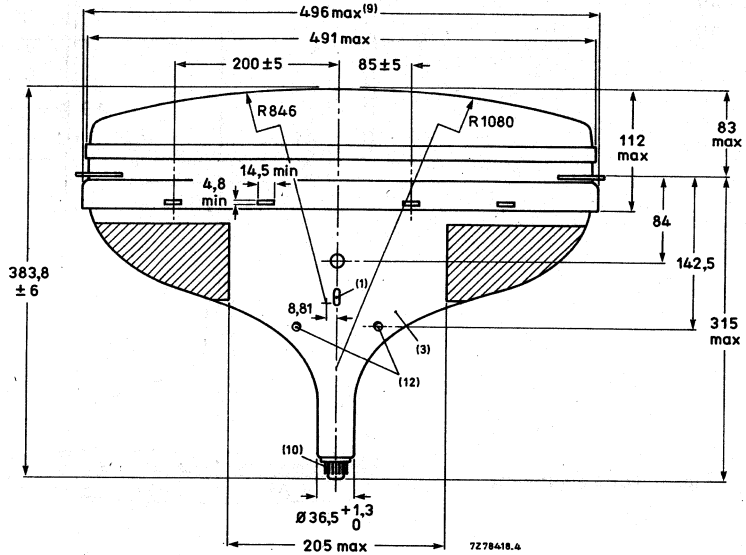

Fig. 2.

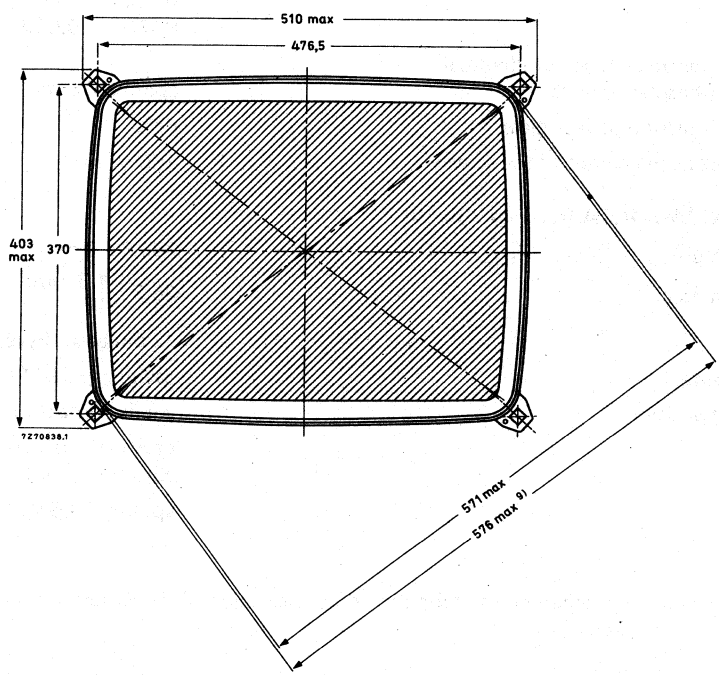

Fig. 3.

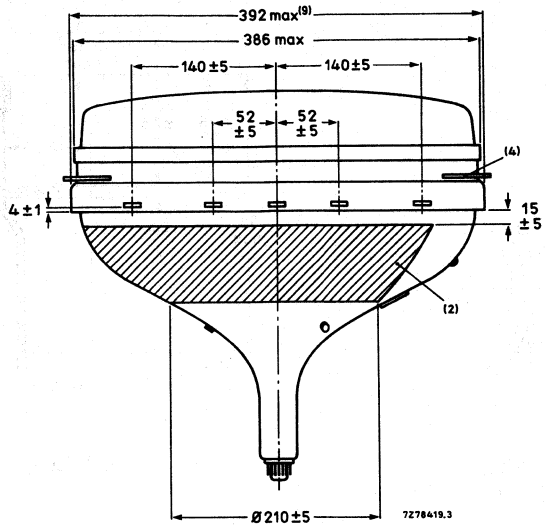

Fig. 4.

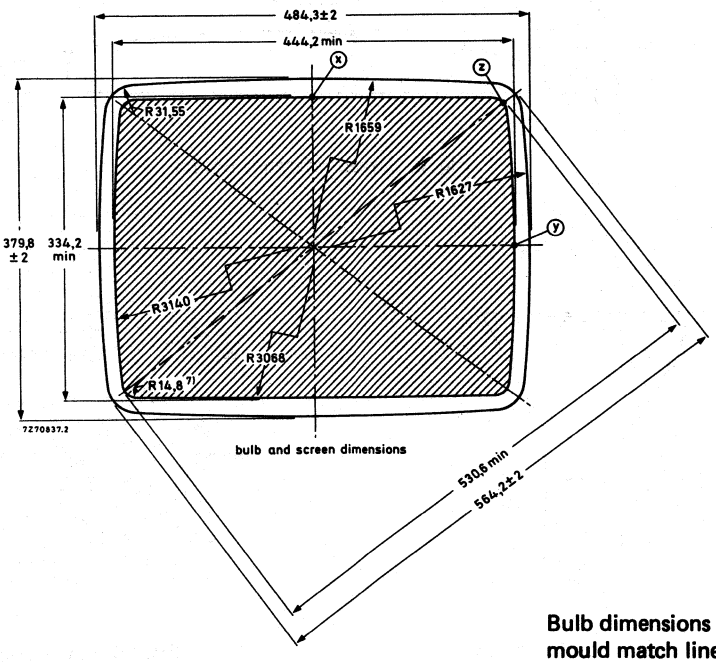

Bulb dimensions at mould match line.

Fig. 5.

MECHANICAL DATA (continued)

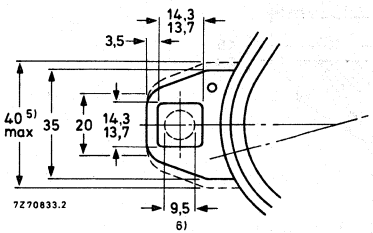

Fig. 6 Lug dimensions.

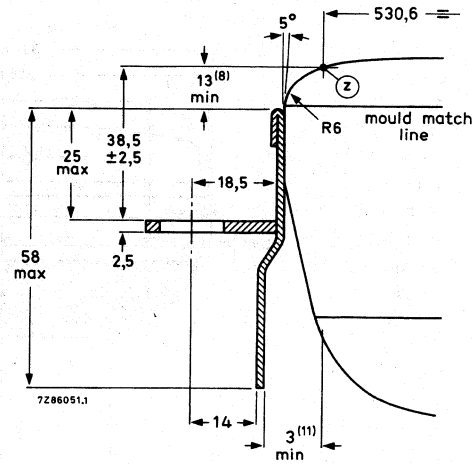

Fig. 7 Lug position.

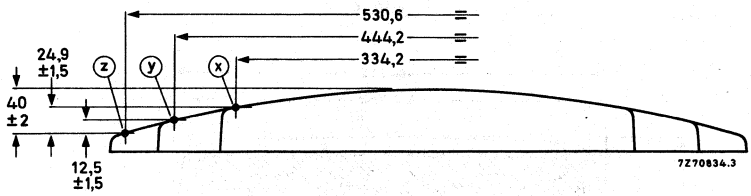

Fig. 8 Screen reference points.

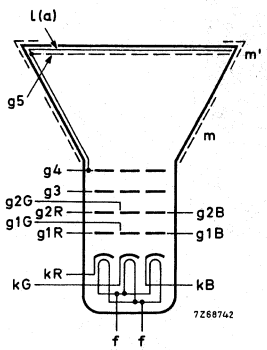

Fig. 9 Electrode configuration.

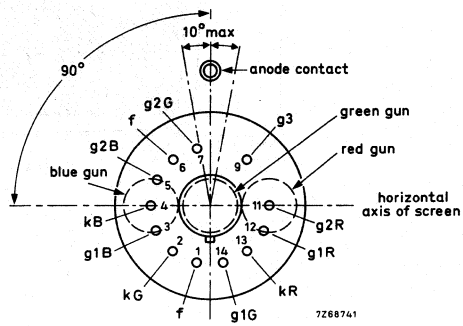

Fig. 10 Pin arrangement.

Notes to outline drawings

1. This ridge can be used as an orientation for the deflection unit.
2. Configuration of outer conductive coating may be different, but will contain the contact area as shown in the drawing.
3. To clean this area wipe only with a soft lintless cloth.
4. The displacement of any lug with respect to the plane through the three other lugs is max. 2 mm.
5. Minimum space to be reserved for mounting lug.
6. The position of the mounting screw in the cabinet must be within a circle of 9,5 mm diameter drawn around the true geometrical positions, i.e. the corners of a rectangle of 476,5 mm x 370 mm.
7. Co-ordinates for radius R = 14,8 mm: x = 203,9 mm, y = 145,5 mm.
8. Distance from point z to any hardware.
9. Maximum dimensions in plane of lugs.
10. The socket for this base should not be rigidly mounted; it should have flexible leads and be allowed to move freely. Bottom circumference of the base will fall within a circle concentric with the tube axis and having a diameter of 55 mm.
    The mass of the mating socket with circuitry should not be more than 150 g; maximum permissible torque is 40 mNm.
11. Minimum distance between glass and rimband in plane of centre line of the apertures.
12. Centring bosses for deflection unit.

Sagittal heights with reference to screen centre at the edge of the minimum useful screen

coordinates		sagittal height
x mm	y mm	mm
0*	166,9	16,1
20	166,9	16,3
40	166,7	16,9
60	166,3	18,0
80	165,9	19,4
100	165,3	21,3
120	164,5	23,6
140	163,7	26,4
160	162,7	29,6
180	161,6	33,3
200	160,3	37,5
215,9**	153,8	40,2
216,0	140	37,7
217,6	120	35,0
219,9	100	32,8
220,0	80	31,0
220,8	60	29,6
221,4	40	28,6
221,8	20	28,0
221,9▲	0	27,0

* Point (x).
** Diagonal.
▲ Point (y).

12-pin base, IEC 67-I-47a, type 2

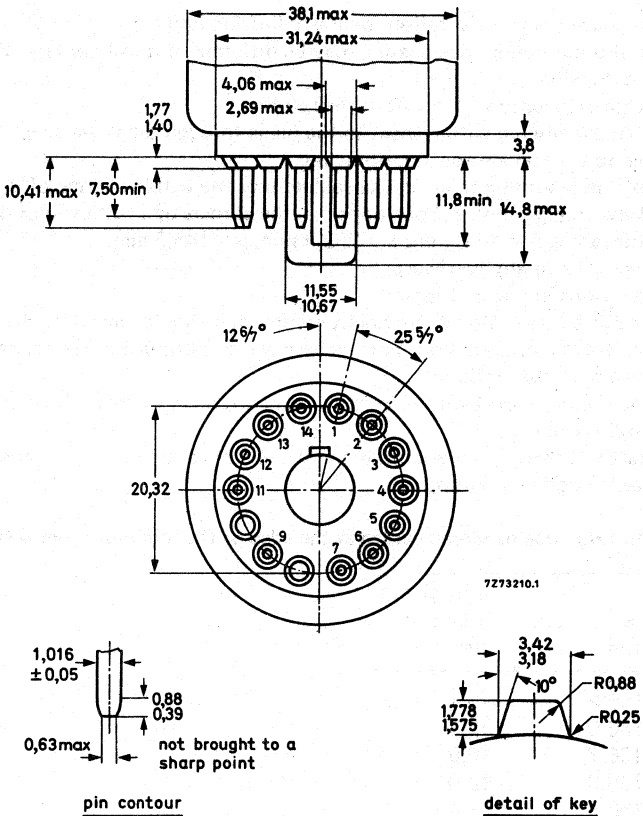

Fig. 11 JEDEC base.

Cavity cap JEDEC J1-21, IEC 67-III-2

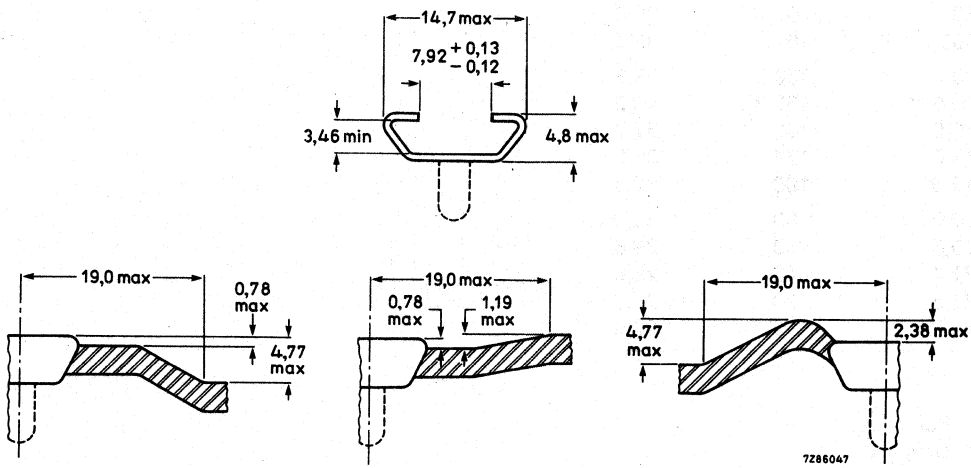

Fig. 12 JEDEC cap.

Maximum cone contour

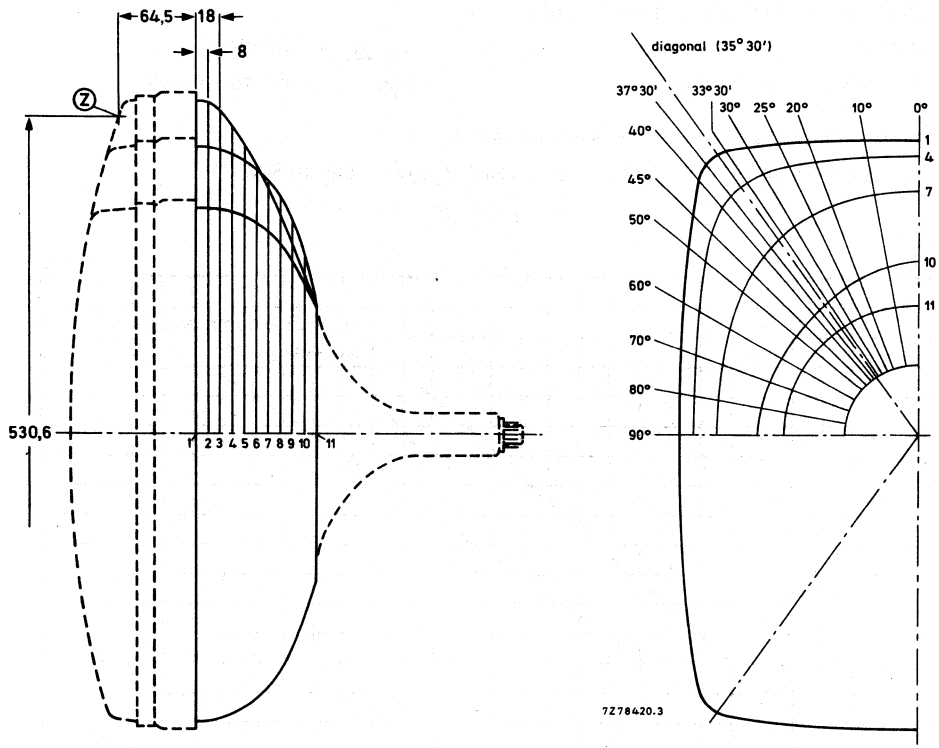

Fig. 13 Cone contour.

Table 1 Cone contour data

Dimensions in mm

section	distance from centre (max. values)															
	nom. distance from section 1	0°	10°	20°	25°	30°	33° 30'	diag.	37° 30'	40°	45°	50°	60°	70°	80°	90°
1		248,0	251,2	261,3	269,3	279,5	286,8	288,0	286,8	281,7	262,3	245,9	222,0	207,0	198,7	196,0
2	8	244,4	247,6	257,6	265,4	275,3	282,3	283,3	282,0	276,8	257,8	241,6	218,0	203,2	195,0	192,4
3	18	240,5	243,6	252,9	259,6	267,0	271,2	271,3	269,7	265,3	250,6	236,6	214,2	199,6	191,4	188,8
4	28	235,0	237,8	245,5	250,2	254,4	255,7	255,0	253,3	249,9	239,5	228,3	208,6	194,8	186,9	184,3
5	38	227,7	229,9	235,2	237,8	239,1	238,7	237,6	236,0	233,3	225,8	217,3	201,0	188,8	181,6	179,2
6	48	218,2	219,6	222,2	222,9	222,3	220,8	219,6	218,1	215,8	210,1	203,6	190,9	180,9	174,7	172,6
7	58	206,4	206,8	206,8	205,9	204,0	202,2	200,9	199,5	197,5	193,2	188,4	179,2	171,6	166,8	165,2
8	68	191,6	190,9	188,5	186,6	184,1	182,2	181,0	179,8	178,2	175,0	171,7	165,7	160,8	157,7	156,6
9	78	172,5	170,9	166,8	164,4	161,9	160,1	159,1	158,2	157,0	154,8	152,9	149,7	145,6	146,5	146,2
10	88	147,0	144,8	140,5	138,3	136,3	135,0	134,3	133,6	132,9	131,7	130,8	130,0	130,3	131,3	132,0
11	97,1	110,0	110,0	110,0	110,0	110,0	110,0	110,0	110,0	110,0	110,0	110,0	110,0	110,0	110,0	110,0

RECOMMENDED OPERATING CONDITIONS (cathode drive)

The voltages are specified with respect to grid 1.

Anode voltage	$V_{a, g5, g4}$	25 kV
Grid 3 (focusing electrode) voltage	V_{g3}	6,5 to 7,45 kV

A. Operation at equal spot cut-off voltage V_k = 140 V

Grid 2 voltage (V_{g2}) adjusted for each gun separately; V_{g2} range 590 to 800 V.

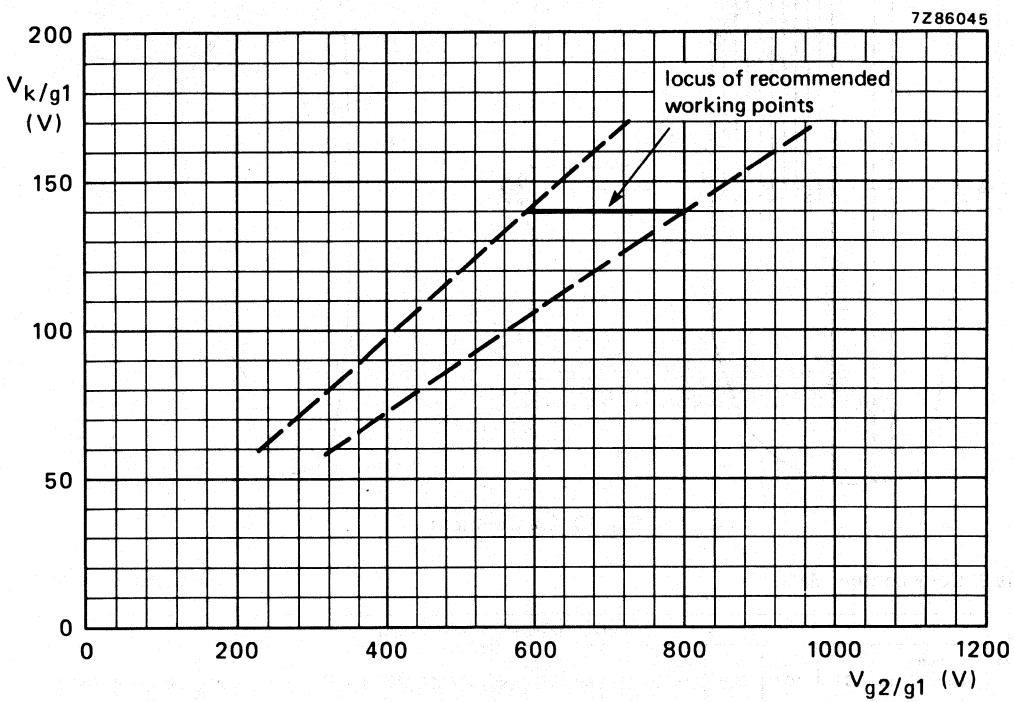

Fig. 14 Spot cut-off design chart.

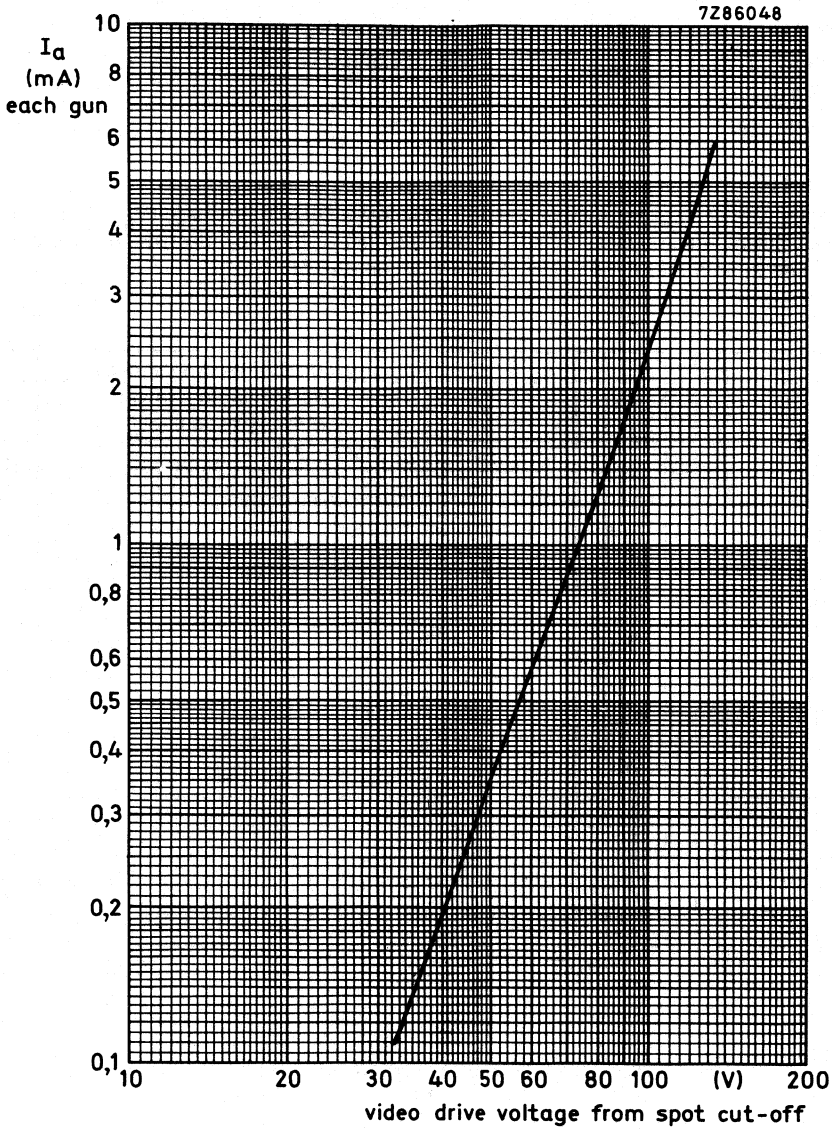

Fig. 15 Typical cathode drive characteristic.

V_f = 6,3 V;
$V_{a, g5, g4}$ = 25 kV;
V_{g3} adjusted for focus;
V_{g2} (each gun) adjusted to provide spot cut-off for V_k = 140 V.

B. Operation at equal grid 2 voltage

Grid 2 voltage (V_{g2}) adjusted for highest gun spot cut-off voltage V_k = 150 V.

Remaining guns adjusted for spot cut-off by means of cathode voltage.

V_{g2} range 630 to 860 V.
V_k range 120 to 150 V.

Adjustment procedure:

Set the cathode voltage (V_k) for each gun at 150 V; increase the grid 2 voltage (V_{g2}) from approx. 600 V to the value at which one of the colours becomes just visible. Now decrease the cathode voltage of the remaining guns so that the other colours also become visible.

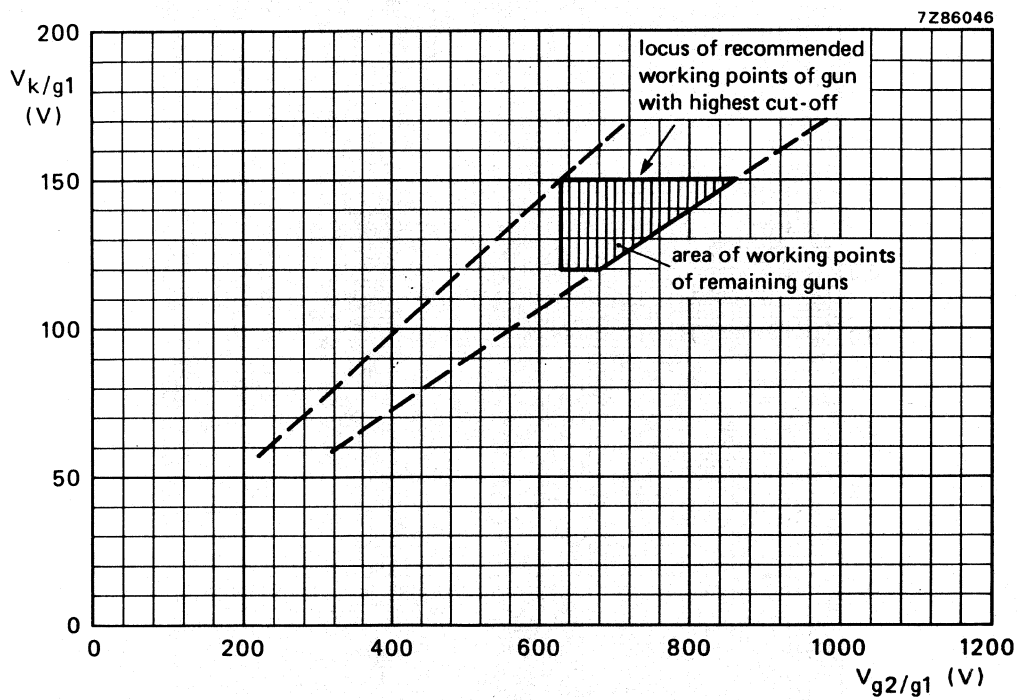

Fig. 16 Spot cut-off design chart.

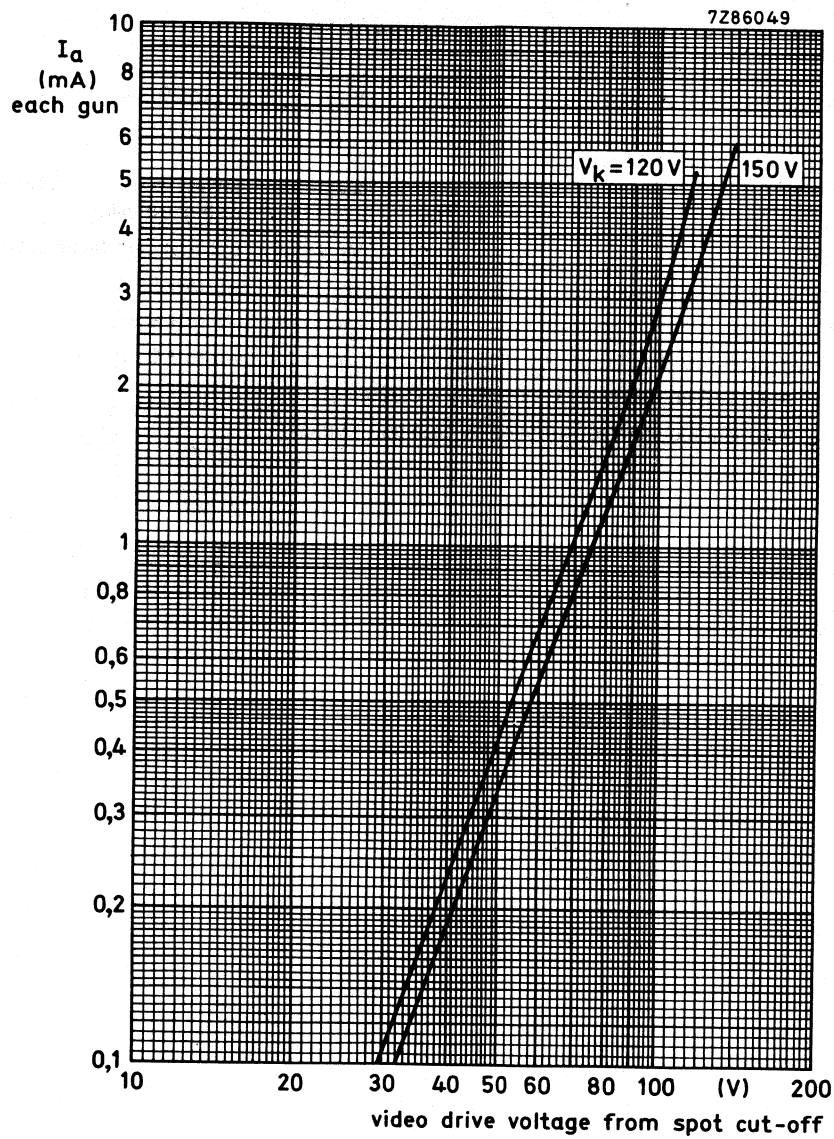

Fig. 17 Typical cathode drive characteristic.

V_f = 6,3 V;
$V_{a,\ g5,\ g4}$ = 25 kV;
V_{g3} adjusted for focus;
V_{g2} (each gun) adjusted to provide spot cut-off for V_k = 120 and 150 V.

EQUIPMENT DESIGN VALUES (each gun if applicable)

The values are valid for anode voltages between 22,5 and 27,5 kV.

The voltages are specified with respect to grid 1.

Grid 3 (focusing electrode) voltage	V_{g3}	26 to 29,8% of anode voltage
Difference in cut-off voltage between guns in one tube	ΔV_k	lowest value is min. 80% of highest value
Heater voltage	V_f	6,3 V at zero beam current
Grid 3 (focusing electrode) current	I_{g3}	−5 to + 5 μA
Grid 2 current	I_{g2}	−5 to + 5 μA
Grid 1 current at V_k = 140 V	I_{g1}	−5 to + 5 μA

To produce white D, CIE co-ordinates x = 0,313, y = 0,329.

Percentage of the total anode current supplied by each gun (typical)

red gun	38,3%
green gun	35,8%
blue gun	25,9%

Ratio of anode current

	min.	av.	max.
red gun to green gun	0,7	1,1	1,4
red gun to blue gun	1,1	1,5	2,0
blue gun to green gun	0,5	0,7	1,0

BEAM CENTRING

Maximum centring error in any direction: 4,5 mm

LIMITING VALUES (each gun if applicable)

Design maximum rating system unless otherwise stated.

The voltages are specified with respect to grid 1.

Anode voltage	$V_{a, g5, g4}$	max.	27,5	kV	notes 1, 2, 3
		min.	22,5	kV	note 4
Long-term average current for three guns	I_a	max.	1000	μA	note 5
Grid 3 (focusing electrode) voltage	V_{g3}	max.	9	kV	
Grid 2 voltage	V_{g2}	max.	1200	V	note 6
Cathode voltage					
positive	V_k	max.	400	V	
positive operating cut-off	V_k	max.	200	V	
negative	$-V_k$	max.	0	V	
negative peak	$-V_{kp}$	max.	2	V	
Cathode to heater voltage					
positive	V_{kf}	max.	250	V	
positive peak	V_{kfp}	max.	300	V	note 1
negative	$-V_{kf}$	max.	135	V	
negative peak	$-V_{kfp}$	max.	180	V	note 1
Heater voltage	V_f	6,3 V	+5	%	notes 1, 7
			−10	%	

Notes to the limiting values

1. Absolute maximum rating system.
2. The X-ray dose remains below the acceptable level of 36 pA/kg (0,5 mR/h), measured with ionization chamber when the tube is used within its limiting values.
3. During adjustment on the production line this value is likely to be surpassed considerably. It is therefore strongly recommended to first make the necessary adjustments for normal operation without picture tube.
4. Operation of the tube at lower voltages impairs the luminance and resolution, and could impair convergence.
5. The short-term average anode current should be limited by circuitry to 1500 μA.
6. During adjustment on the production line max. 1500 V is permitted.
7. For maximum cathode life and optimum performance it is recommended that the heater supply be designed for 6,3 V at zero beam current.

FLASHOVER PROTECTION

High electric field strengths are present between the gun electrodes of picture tubes. Voltages between gun electrodes may reach values of 20 kV over approx. 1 mm. As a result of the Soft-Flash technology these flashover currents are limited to approx. 60 A offering higher set reliability, optimum circuit protection and component savings.

Primary protective circuitry using properly grounded spark gaps and series isolation resistors (preferably carbon composition) is still necessary to prevent tube damage and damage to the circuitry which is directly connected to the tube socket. The spark gaps should be connected to all picture tube electrodes at the socket according to the figure below; they are not required on the heater pins. No other connections between the outer conductive coating and the chassis are permissible. The spark gaps should be designed for a breakdown voltage at the focusing electrode (g3) of 10,5 kV, and at the other electrodes of 1,5 to 2 kV. The values of the series isolation resistors should be as high as possible (min. 1,5 kΩ) without causing deterioration of the circuit performance. The resistors should be able to withstand an instantaneous surge of 20 kV for the focusing circuit and 12 kV for the remaining circuits without arcing.

Additional information is available on request.

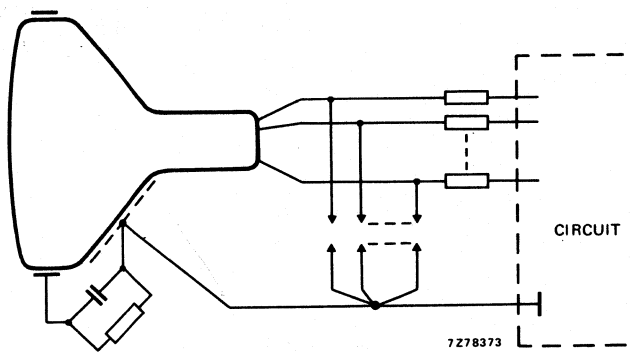

Fig. 18 Flashover protection circuit.

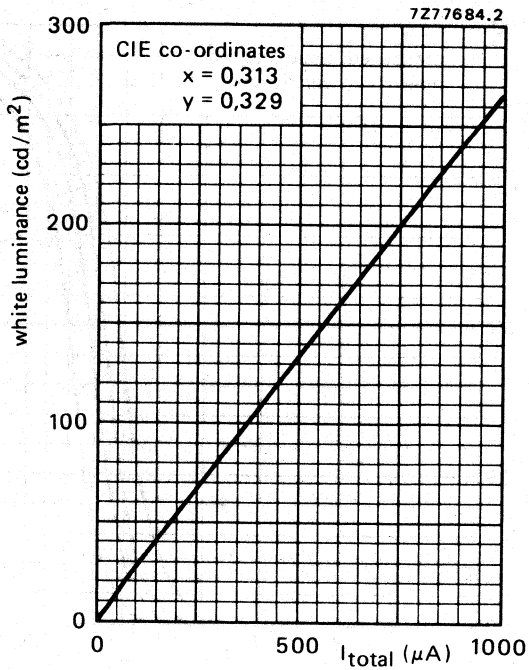

Fig. 19 Luminance at the centre of the screen as a function of I_{total}. Scanned area 444,2 mm x 334,2 mm.

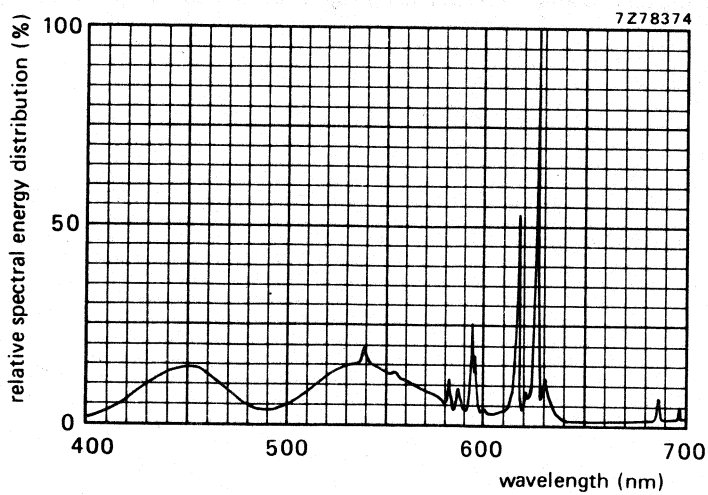

Fig. 20 Simultaneous excitation of red, green and blue phosphor, measured in a tube, to produce white of x = 0,313, y = 0,329. Exact shape of the peaks depends on the resolution of the measuring apparatus.

Colour co-ordinates:	x	y
red	0,635	0,340
green	0,315	0,600
blue	0,150	0,060

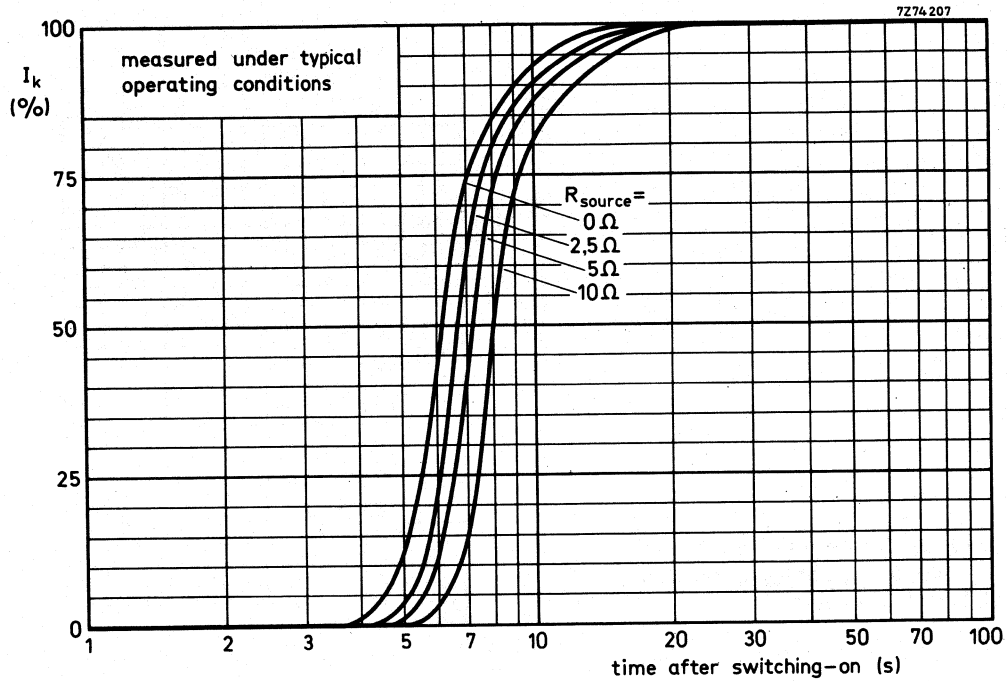

Fig. 21 Cathode heating time to attain a certain percentage of the cathode current at equilibrium conditions.

DEGAUSSING

The picture tube is provided with an internal magnetic shield. This shield and the shadow mask with its suspension system may be provided with an automatic degaussing system, consisting of two coils covering top and bottom cone parts.

For proper degaussing an initial magnetomotive force (MMF) of 250 ampere-turns is required in each of the coils. This MMF has to be gradually decreased by appropriate circuitry. To prevent beam landing disturbances by line-frequency currents induced in the degaussing coils, these coils should be shunted by a capacitor of sufficiently high value. In the steady state, no significant MMF should remain in the coils ($\leqslant$ 0,25 ampere-turns).

If single-phase power rectification is employed in the TV circuitry, provision should be included to prevent asymmetric distortion of the AC voltage applied to the degaussing circuit due to high DC inrush currents.

To ease the mounting of the coils, the rimband is provided with rectangular holes. An example is given below.

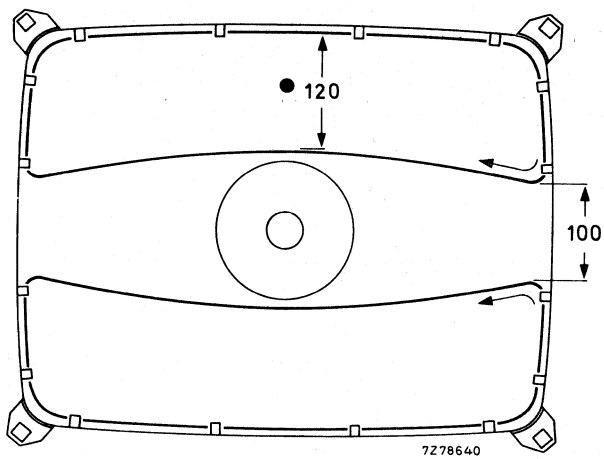

Fig. 22 Position of degaussing coils on the picture tube.

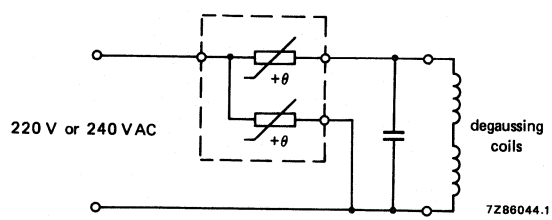

Fig. 23 Degaussing circuit using dual PTC thermistor 2322 662 98009.

Data of each degaussing coil

Circumference	120 cm
Number of turns	50
Copper-wire diameter	0,35 mm
Aluminium-wire diameter	0,45 mm
Resistance	11 Ω

DEFLECTION UNIT

QUICK REFERENCE DATA

Picture tube	A56-540X
gun arrangement	in line
diagonal	56 cm (22 in)
neck diameter	36,5 mm
Deflection angle	110°
Line deflection current, edge to edge at 25 kV	5,00 A (p-p)
Inductance of line coils	1,51 mH
Field deflection current, edge to edge at 25 kV	1,93 A (p-p)
Resistance of field coils (potentiometer R1 included)	5,9 Ω

APPLICATION

This deflection unit is for use with 110° in-line colour picture tube A56-540X, in conjunction with e.g.: diode-split line output transformer AT2076/70A and linearity control unit AT4042/42 or AT4042/30.

DESCRIPTION

The deflection unit consists of flangeless line and field deflection coils, a one piece ferrite ring and a one piece coil carrier.

Connection to the deflection coils can be made via a connector (contact pins 1 to 4) or solder tags 1a to 4a, see Fig. 1a.

MECHANICAL DATA

Outlines

Dimensions in mm

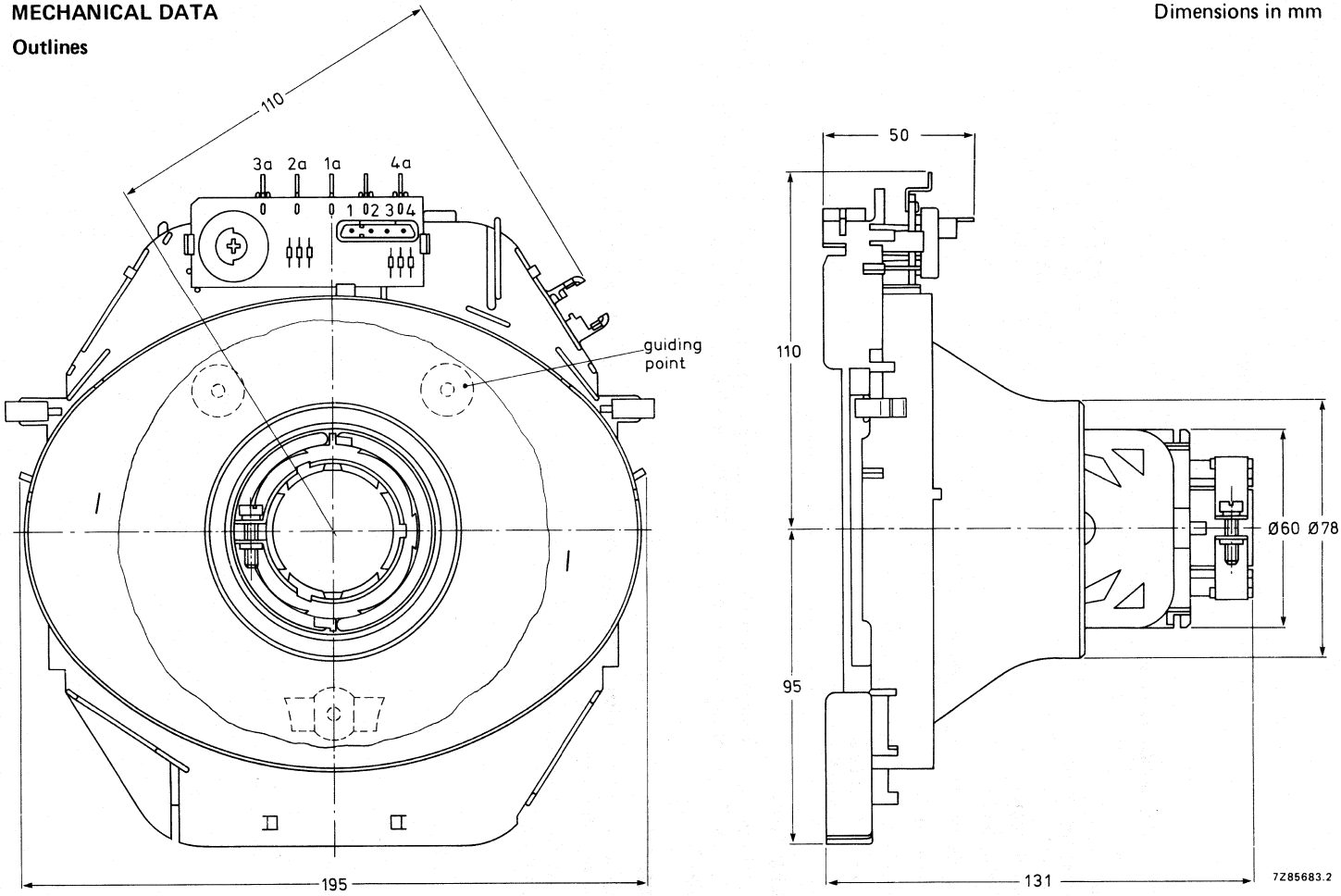

Fig. 1a Maximum dimensions.

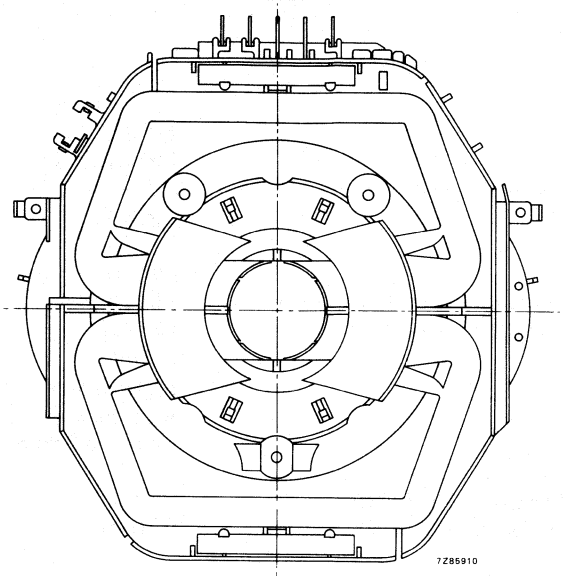

Fig. 1b Front view.

The deflection unit fits a tube with a neck diameter of $36{,}5\ ^{+1{,}3}_{-0}$ mm.

Maximum operating temperature (average copper temperature measured with resistance method)	+ 90 °C
Storage temperature range	−20 to + 90 °C
Flame retardent	according to UL 1413, category 94, V-1

Mounting

The deflection unit can simply be pushed on the neck of a picture tube.

Both on the neck of the tube and on the deflection unit, there are 3 reference surfaces to establish angular and axial positioning.

Once the unit is mounted the combination is perfectly aligned and requires no further adjustment for static convergence, colour purity and raster orientation.

The unit must be pressed against the reference surfaces on the cone of the picture tube with a force of 20 ± 5 N and fixed by tightening teh screw in the clamping ring at the rear with a torque of $1{,}0\ ^{+0{,}4}_{-0{,}2}$ Nm.

Maximum axial force exerted on the screw is 20 N.

ENVIRONMENTAL TEST SPECIFICATIONS

Vibration	IEC 68-2-6 (test Fc)
Shock	IEC 68-2-27 (test Ea; 35g)
Bump	IEC 68-2-29 (test Eb; 25g)
Cold	IEC 68-2-1 (test Ab)
Dry heat	IEC 68-2-2 (test Bb)
Damp heat, steady state	IEC 68-2-3 (test Ca)
Cyclic damp heat	IEC 68-2-30 (test Db)
Change of temperature	IEC 68-2-14 (test Nb)

ELECTRICAL DATA

Line coils	
Inductance	1,51 mH ± 4%
Resistance at 25 °C	1,3 Ω ± 10%
Magnetic flux	7,6 mWb ± 5%
Line deflection current, raster scan, at 25 kV	5,00 A (p-p)
Raster scan	518 mm
Field coils	
Inductance	9,90 mH ± 10%
Resistance at 25 °C (potentiometer R1 included)	5,85 Ω ± 7%
Field deflection current, raster scan, at 25 kV	1,93 A (p-p)
Raster scan	390 mm
Cross-talk	a voltage of 1 V, 15 kHz applied to the line coils causes no more than 20 mV across the field coils
Insulation resistance	
between line and field coils, at 3 kV (DC)	> 10 MΩ
between field coils and ferrite ring, at 300 V (DC)	> 10 MΩ

Connections
(see also Fig. 1a).

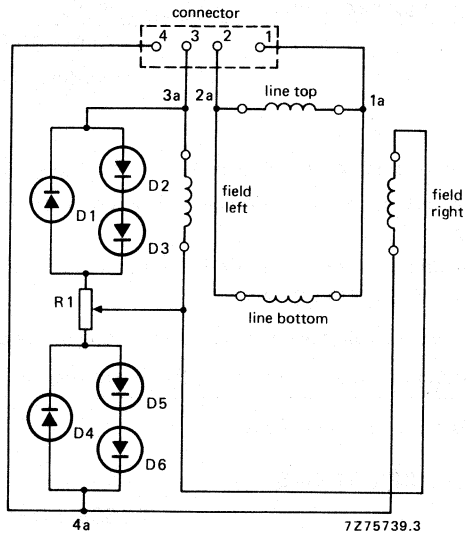

Fig. 2 Connection diagram.

Notes to Fig. 2

- Contacts 1 and 1a must be connected to the live side of the line circuitry, contacts 3 and 3a must be connected to the live side of the field circuitry.
- Matching female Stocko connector: MKF 804-1-0-404.
- D1 to D6 = BAS11, BAX18, BAX18A, BAV10 or BAW62.
- R1 = 180 Ω.

30AX COLOUR PICTURE TUBE

- Automatic snap-in raster orientation
- Push-on axial purity positioning
- Internal magneto-static beam alignment
- Hi-Bi gun with quadrupole cathode lens
- Self-aligning, self-converging assembly with low power consumption, when combined with deflection unit AT 1870
- North-south pin-cushion distortion-free
- 110° deflection
- Hi-Bri screen
- Pigmented phosphors: enhanced contrast
- Phosphor lines follow glass contour
- In-line gun
- Standard 36,5 mm neck
- Soft-Flash technology
- Slotted shadow mask optimized for minimum moiré
- Fine pitch over entire screen
- Quick-heating cathodes
- Internal magnetic shield
- Anti-crackle coating
- Reinforced envelope for push-through mounting

QUICK REFERENCE DATA

Deflection angle	110°
Face diagonal	66 cm
Overall length	42 cm
Neck diameter	36,5 mm
Heating	6,3 V, 720 mA
Anode voltage	25 kV
Focusing voltage	28% of anode voltage

ELECTRON-OPTICAL DATA

Electron gun system	in-line with separate grids
Focusing method	electrostatic
Focus lens	hi-bi potential
Deflection method	magnetic
Deflection angles	
diagonal	110°
horizontal	97°
vertical	77°

ELECTRICAL DATA

Capacitances				
anode to external conductive coating	$C_{a,\ g5,\ g4/m}$	>	1500	pF
anode to metal rimband	$C_{a,\ g5,\ g4/m'}$		300	pF
grid of any gun to all other electrodes	$C_{g\ 1R}$, $C_{g\ 1G}$, $C_{g\ 1B}$		7	pF
cathodes of all guns (connected in parallel) to all other electrodes	C_k		12	pF
cathode of any gun to all other electrodes	C_{kR}, C_{kG}, C_{kB}		4	pF
grid 3 (focusing electrode) to all other electrodes	C_{g3}		7	pF
Resistance between rimband and external conductive coating		min.	50	MΩ
Heating: indirect by AC (preferably mains or line frequency) or DC				
heater voltage	V_f		6,3	V
heater current	I_f		720	mA

OPTICAL DATA

Screen	metal-backed vertical phosphor stripes; phosphor lines follow glass contour
Screen finish	satinized
Useful screen dimensions	
diagonal	min. 617,8 mm
horizontal axis	min. 518 mm
vertical axis	min. 390 mm
Positional accuracy of the screen with respect to the glass contour	see Fig. 1
Phosphors	
red	pigmented europium activated rare earth
green	sulphide type
blue	pigmented sulphide type

A = 203,2 mm
B = 274,2 mm
C = 140,2 mm
D = 208,3 mm
E = 30,9 mm

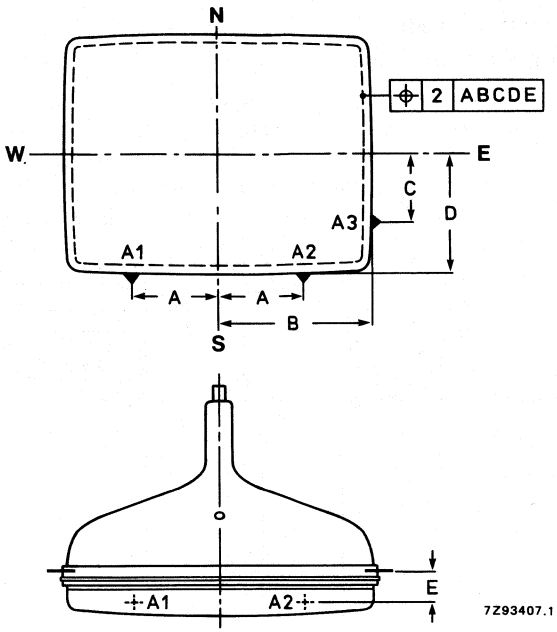

Fig. 1 Tube alignment.

		x	y
Colour co-ordinates			
red		0,635	0,340
green		0,315	0,600
blue		0,150	0,060
Centre-to-centre distance of identical colour phosphor stripes		approx. 0,8 mm	
Light transmission of face glass		69%	
Luminance at the centre of the screen	L	170 cd/m²*	

MECHANICAL DATA (see Figs 2 to 10)

Overall length	421,6 ± 6 mm
Neck diameter	$36{,}5\ ^{+\ 1{,}3}_{-\ 0}$ mm
Base	12-pin base IEC 67-I-47a, type 2
Anode contact	cavity cap JEDEC J1-21, IEC 67-III-2
Mounting position	anode contact on top
Rimband	provided with 18 slots to accommodate clips for mounting of degaussing coils
Net mass	approx. 20 kg

Handling

During shipment and handling the tube should not be subjected to accelerations greater than 350 m/s² in any direction.

* Tube settings adjusted to produce white D (x = 0,313, y = 0,329), focused raster, current density 0,4 μA/cm².

MECHANICAL DATA (continued) Dimensions in mm

Notes are given after the drawings.

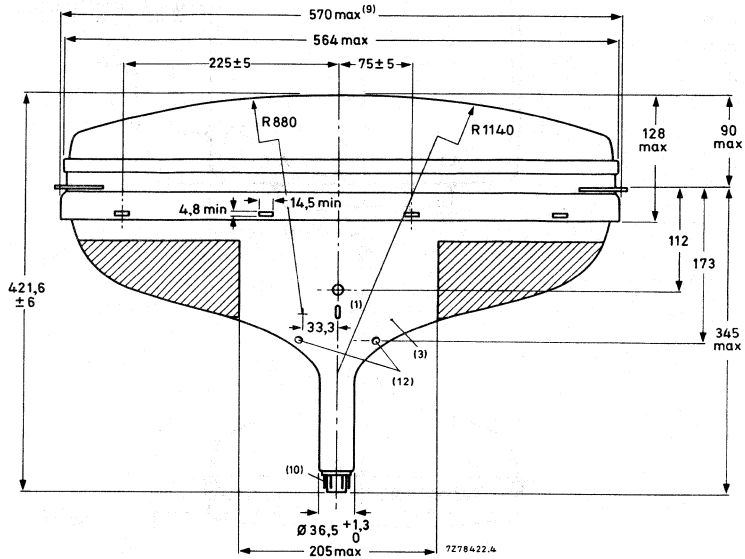

Fig. 2.

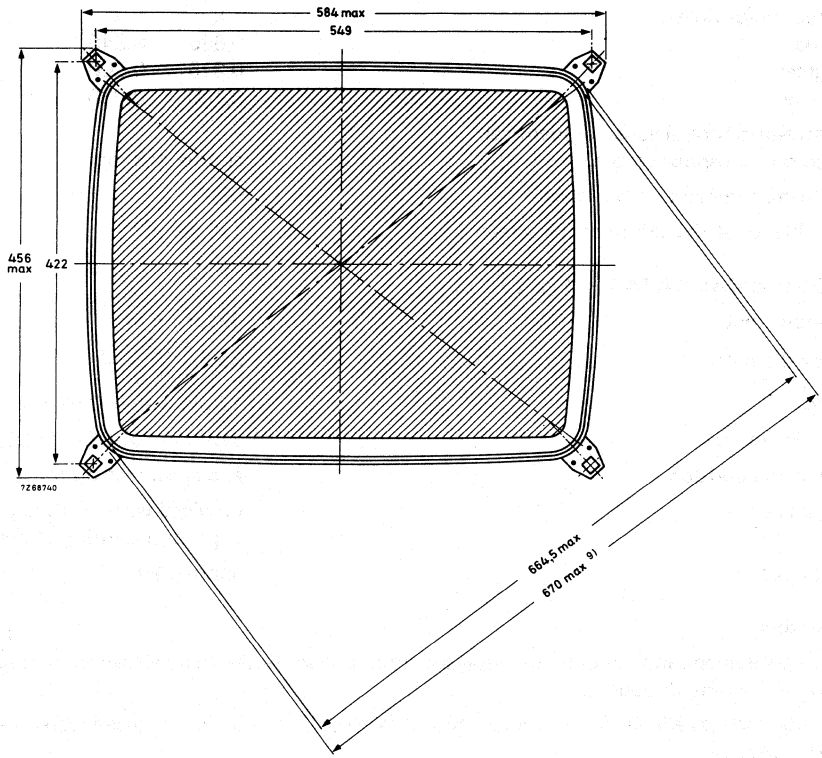

Fig. 3.

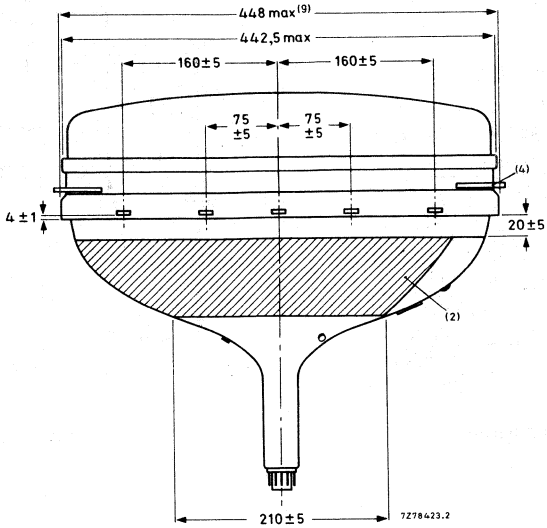

Fig. 4.

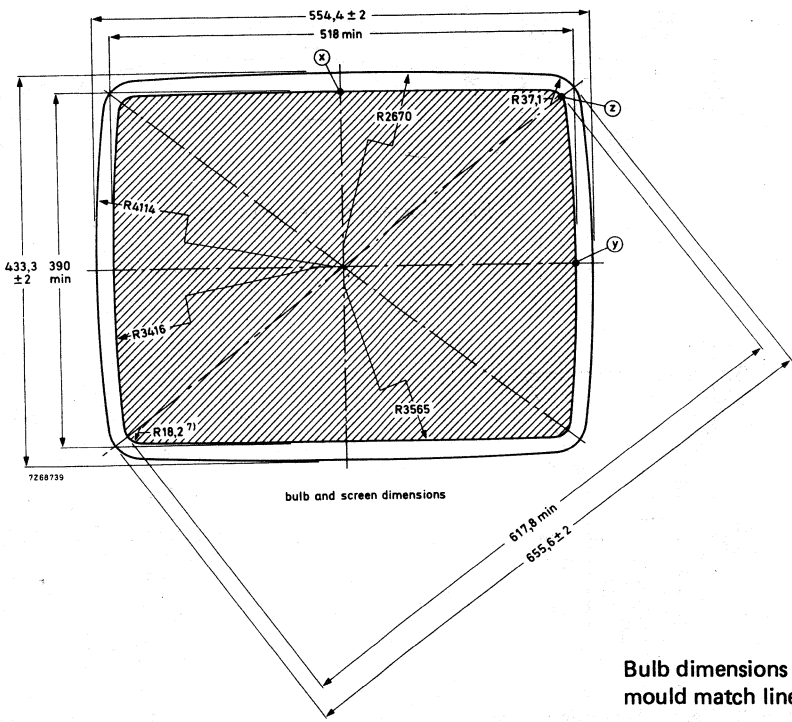

Fig. 5.

Bulb dimensions at mould match line.

MECHANICAL DATA (continued)

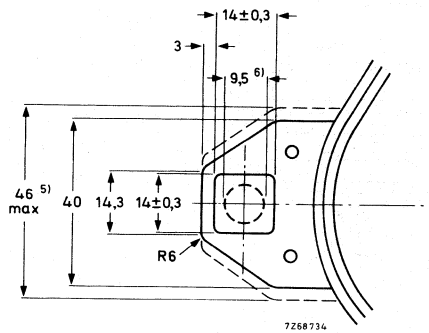

Fig. 6 Lug dimensions.

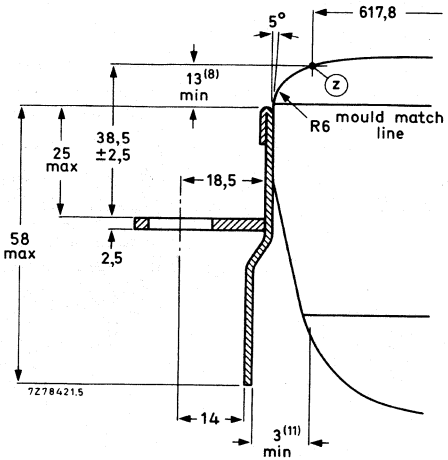

Fig. 7 Lug position.

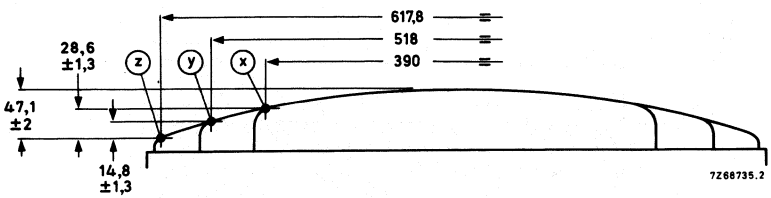

Fig. 8 Screen reference points.

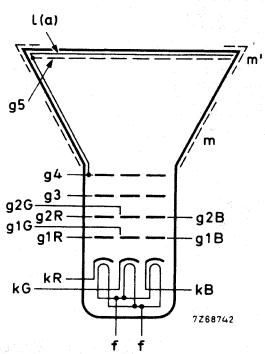

Fig. 9 Electrode configuration.

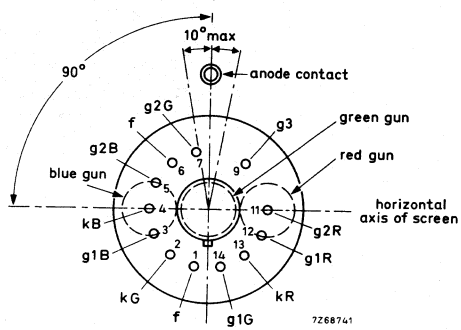

Fig. 10 Pin arrangement.

Notes to outline drawings

1. This ridge can be used as an orientation for the deflection unit.
2. Configuration of outer conductive coating may be different, but will contain the contact area as shown in the drawing.
3. To clean this area, wipe only with a soft lintless cloth.
4. The displacement of any lug with respect to the plane through the three other lugs is max. 2 mm.
5. Minimum space to be reserved for mounting lug.
6. The position of the mounting screw in the cabinet must be within a circle of 9,5 mm diameter drawn around the true geometrical positions, i.e. the corners of a rectangle of 549 mm x 422 mm.
7. Co-ordinates for radius R = 18,2 mm: x = 236,6 mm, y = 168,9 mm.
8. Distance from point z to any hardware.
9. Maximum dimensions in plane of lugs.
10. The socket for this base should not be rigidly mounted; it should have flexible leads and be allowed to move freely. Bottom circumference of the base will fall within a circle concentric with the tube axis and having a diameter of 55 mm.
    The mass of the mating socket with circuitry should not be more than 150 g; maximum permissible torque is 40 mNm.
11. Minimum distance between glass and rimband in plane of the apertures.
12. Centring bosses for deflection unit.

Sagittal heights with reference to screen centre at the edge of the minimum useful screen

coordinates x mm	coordinates y mm	sagittal height mm
0*	195,0	18,7
20	194,9	18,9
40	194,8	19,4
60	194,5	20,3
80	194,1	21,6
100	193,6	23,3
120	193,0	25,3
140	192,2	27,7
160	191,4	30,5
180	190,5	33,6
200	189,4	27,2
220	188,2	41,2
230	187,6	43,4
251,4**	179,5	47,1
255,3	160	44,7
256,1	140	41,8
256,9	120	39,3
257,5	100	37,3
258,1	80	35,6
258,6	60	34,2
258,8	40	33,3
258,9	20	32,7
259,0▲	0	32,5

* Point (x). ** Diagonal. ▲ Point (y).

12-pin base, IEC 67-I-47a, type 2

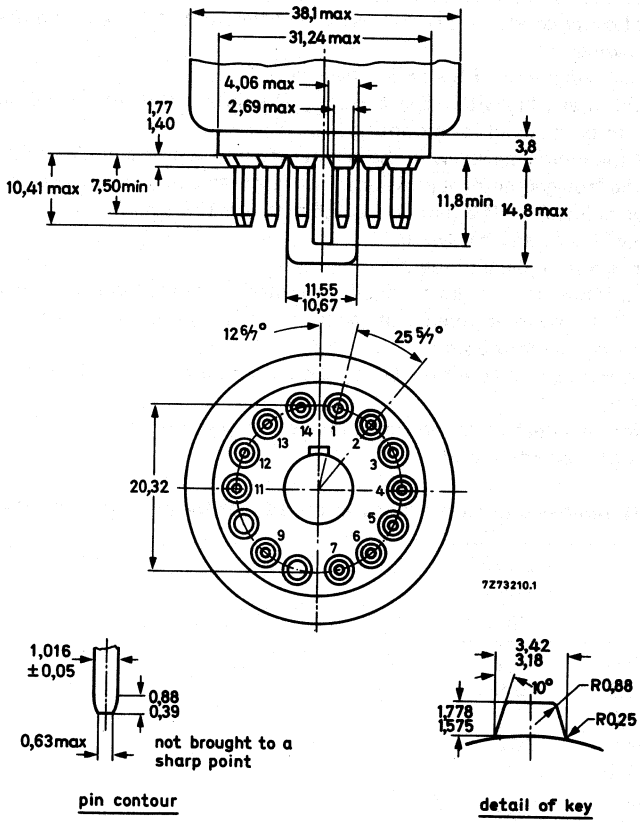

Fig. 11 JEDEC base.

Cavity cap JEDEC J1-21, IEC 67-III-2

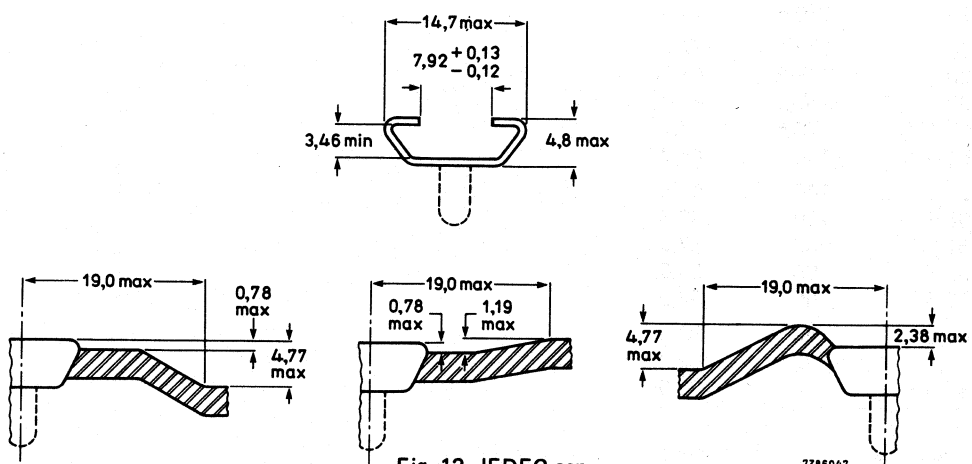

Fig. 12 JEDEC cap.

Maximum cone contour

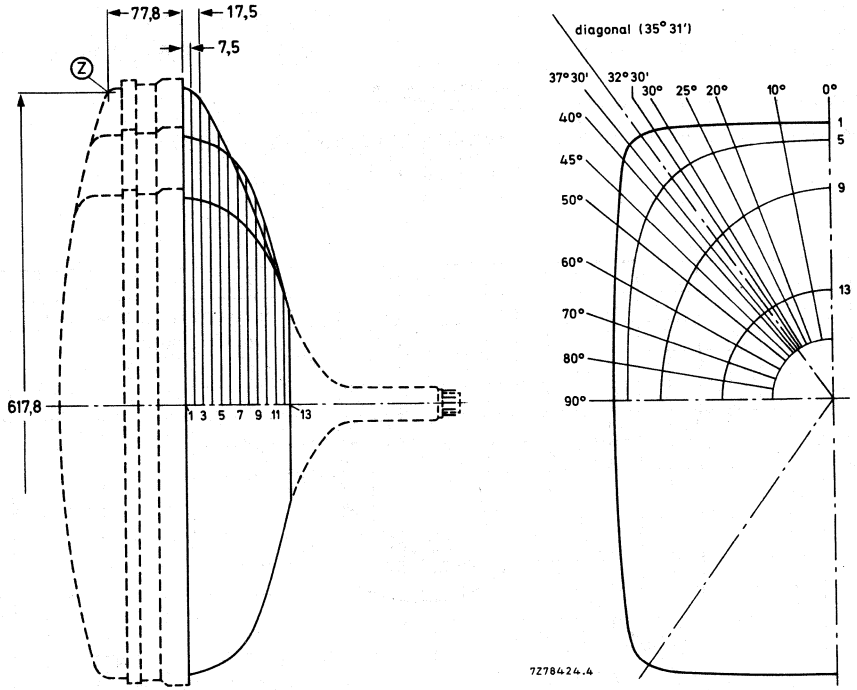

Fig. 13 Cone contour.

Table 1 Cone contour data

Dimensions in mm

section	distance from centre (max. values)															
	nominal distance from section 1	0°	10°	20°	25°	30°	32° 30'	diag.	37° 30'	40°	45°	50°	60°	70°	80°	90°
1	0	279,0	283,0	295,4	305,2	318,0	325,4	329,0	327,5	320,7	296,5	276,7	248,3	230,7	221,1	218,0
2	7,5	276,4	280,3	292,5	302,0	313,8	320,4	323,1	321,3	314,8	292,5	273,5	245,6	228,1	218,5	215,5
3	17,5	273,4	277,1	288,2	296,2	304,8	308,7	309,2	307,0	301,9	285,1	268,8	242,5	225,3	215,8	212,8
4	27,5	268,8	272,1	281,5	287,4	292,7	294,3	293,4	291,3	287,1	274,6	261,1	237,5	221,3	212,1	209,1
5	37,5	262,3	265,1	272,0	275,7	277,9	278,0	276,4	274,4	270,9	261,4	250,5	230,4	215,7	207,2	204,3
6	47,5	254,0	255,9	260,0	261,4	261,2	260,2	258,1	256,2	253,2	245,8	237,4	221,1	208,5	201,0	198,4
7	57,5	243,5	244,5	245,3	244,6	242,7	241,2	238,8	237,0	234,4	228,5	222,1	209,6	199,7	193,4	191,3
8	67,5	230,1	229,8	227,8	225,7	222,8	221,0	218,6	217,0	214,8	210,1	205,3	196,2	188,9	184,3	184,6
9	77,5	213,3	211,9	207,8	204,9	201,7	199,9	197,7	196,3	194,5	190,9	187,4	181,2	176,4	173,4	172,4
10	87,5	194,0	191,4	185,6	182,3	178,9	177,3	175,4	174,2	172,8	170,1	167,8	164,3	162,1	161,1	161,0
11	97,5	172,8	168,1	161,4	158,0	154,9	153,5	152,0	151,1	150,0	148,2	146,9	145,7	146,0	147,3	148,2
12	107,5	142,1	139,1	133,9	131,5	129,4	128,4	127,5	126,9	126,3	125,4	124,9	125,2	126,9	129,5	131,1
13	117,5	110,0	110,0	110,0	110,0	110,0	110,0	110,0	110,0	110,0	110,0	110,0	110,0	110,0	110,0	110,0

RECOMMENDED OPERATING CONDITIONS (cathode drive)

The voltages are specified with respect to grid 1.

Anode voltage	$V_{a, g5, g4}$	25 kV
Grid 3 (focusing electrode) voltage	V_{g3}	6,5 to 7,45 kV

A. Operation at equal spot cut-off voltage V_k = 140 V

Grid 2 voltage (V_{g2}) adjusted for each gun separately; V_{g2} range 590 to 800 V.

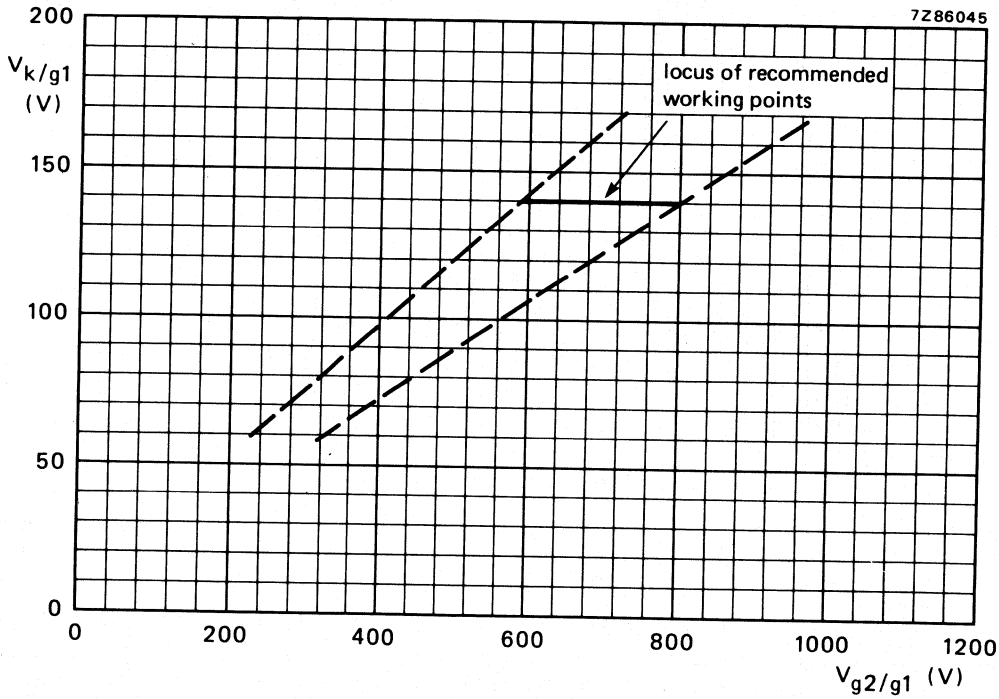

Fig. 14 Spot cut-off design chart.

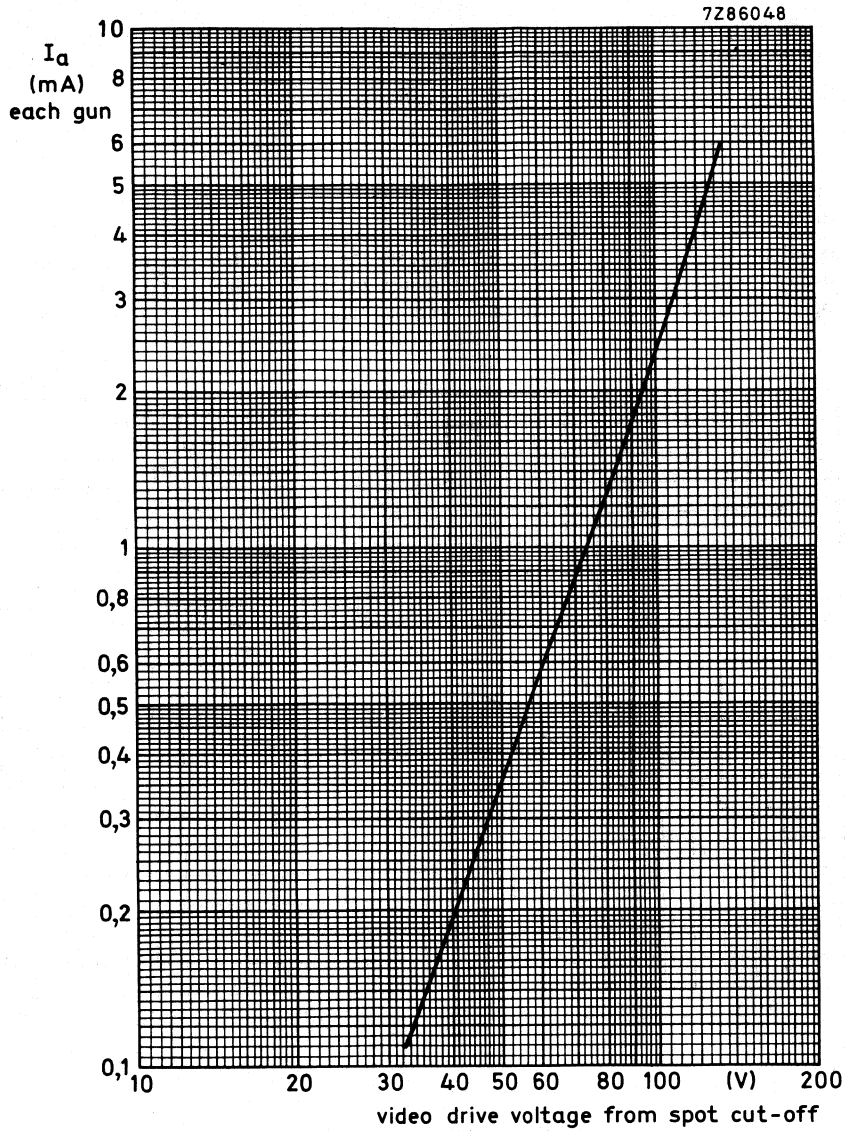

Fig. 15 Typical cathode drive characteristic.

V_f = 6,3 V;
$V_{a, g5, g4}$ = 25 kV;
V_{g3} adjusted for focus;
V_{g2} (each gun) adjusted to provide spot cut-off for V_k = 140 V.

B. Operation at equal grid 2 voltage

Grid 2 voltage (V_{g2}) adjusted for highest gun spot cut-off voltage V_k = 150 V.

Remaining guns adjusted for spot cut-off by means of cathode voltage.

V_{g2} range 630 to 860 V.

V_k range 120 to 150 V.

Adjustment procedure:

Set the cathode voltage (V_k) for each gun at 150 V; increase the grid 2 voltage (V_{g2}) from approx. 600 V to the value at which one of the colours becomes just visible. Now decrease the cathode voltage of the remaining guns so that the other colours also become visible.

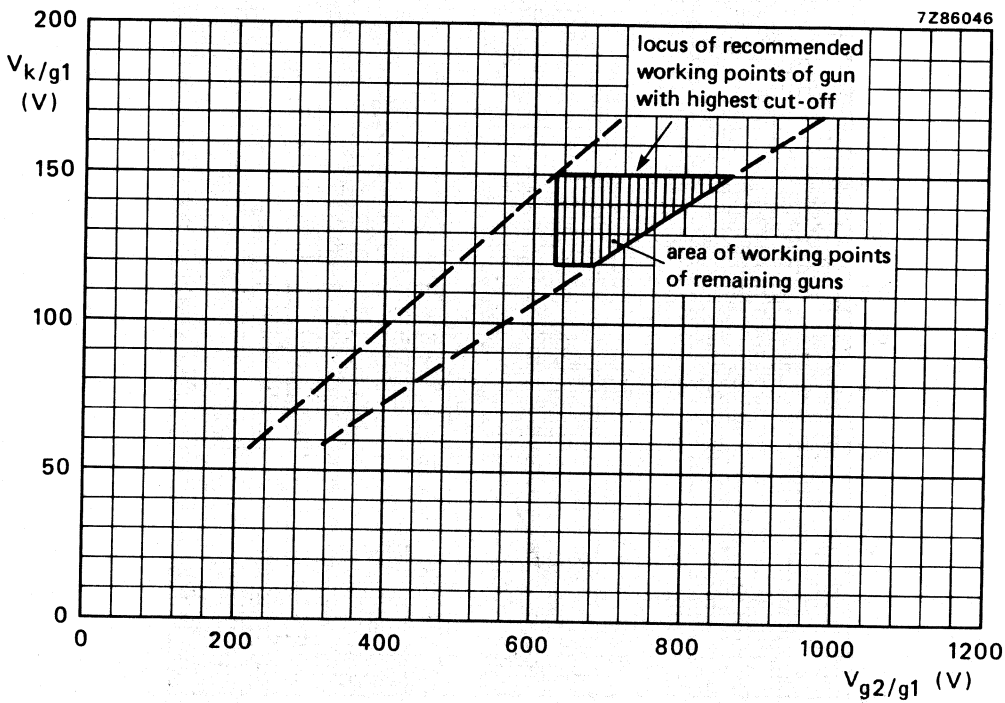

Fig. 16 Spot cut-off design chart.

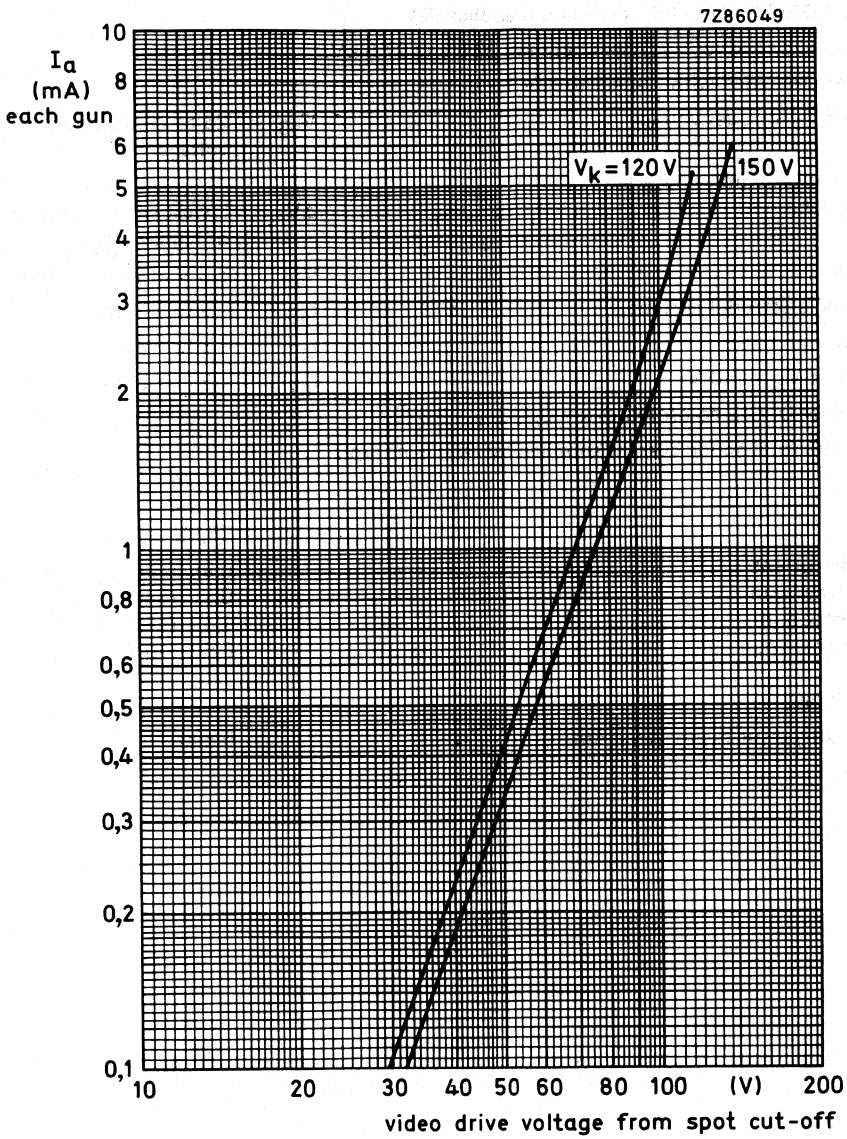

Fig. 17 Typical cathode drive characteristic.

V_f = 6,3 V;
$V_{a, g5, g4}$ = 25 kV;
V_{g3} adjusted for focus;
V_{g2} (each gun) adjusted to provide spot cut-off for V_k = 120 V and 150 V.

EQUIPMENT DESIGN VALUES (each gun if applicable)

The values are valid for anode voltages between 22,5 and 27,5 kV.

The voltages are specified with respect to grid 1.

Grid 3 (focusing electrode) voltage	V_{g3}	26 to 29,8% of anode voltage
Difference in cut-off voltage between guns in one tube	ΔV_k	lowest value is min. 80% of highest value
Heater voltage	V_f	6,3 V at zero beam current
Grid 3 (focusing electrode) current	I_{g3}	−5 to + 5 μA
Grid 2 current	I_{g2}	−5 to + 5 μA
Grid 1 current at V_k = 140 V	I_{g1}	−5 to + 5 μA

To produce white D, CIE co-ordinates x = 0,313, y = 0,329.

Percentage of the total anode current supplied by each gun (typ.)	
red gun	38,3%
green gun	35,8%
blue gun	25,9%

Ratio of anode current	min.	av.	max.
red gun to green gun	0,7	1,1	1,4
red gun to blue gun	1,1	1,5	2,0
blue gun to green gun	0,5	0,7	1,0

BEAM CENTRING

Maximum centring error in any direction	5 mm

LIMITING VALUES (each gun if applicable)

Design maximum rating system unless otherwise stated.

The voltages are specified with respect to grid 1.

Anode voltage	$V_{a, g5, g4}$	max. min.	27,5 kV 22,5 kV		notes 1, 2, 3 note 4
Long-term average current for three guns	I_a	max.	1000	μA	note 5
Grid 3 (focusing electrode) voltage	V_{g3}	max.	9	kV	
Grid 2 voltage	V_{g2}	max.	1200	V	note 6
Cathode voltage					
positive	V_k	max.	400	V	
positive operating cut-off	V_k	max.	200	V	
negative	$-V_k$	max.	0	V	
negative peal	$-V_{kp}$	max.	2	V	
Cathode to heater voltage					
positive	V_{kf}	max.	250	V	
positive peak	V_{kfp}	max.	300	V	note 1
negative	$-V_{kf}$	max.	135	V	
negative peak	$-V_{kfp}$	max.	180	V	note 1
Heater voltage	V_f	6,3 V	+ 5 −10	% %	notes 1, 7

Notes to the limting values

1. Absolute maximum rating system.
2. The X-ray dose rate remains below the acceptable value of 36 pA/kg (0,5 mR/h), measured with ionization chamber when the tube is used within its limiting values.
3. During adjustment on the production line this value is likely to be surpassed considerably. It is therefore strongly recommended to first make the necessary adjustments for normal operation without picture tube.
4. Operation of the tube at lower voltages impairs the luminance and resolution, and could impair convergence.
5. The short-term average anode current should be limited by circuitry to 1500 μA.
6. During adjustment on the production line max. 1500 V is permitted.
7. For maximum cathode life and optimum performance it is recommended that the heater supply be designed for 6,3 V at zero beam current.

FLASHOVER PROTECTION

High electric field strengths are present between the gun electrodes of picture tubes. Voltages between gun electrodes may reach values of 20 kV over approx. 1 mm. As a result of the Soft-Flash technology these flashover currents are limited to approx. 60 A offering higher set reliability, optimum circuit protection and component savings.

Primary protective circuitry using properly grounded spark gaps and series isolation resistors (preferably carbon composition) is still necessary to prevent tube damage and damage to the circuitry which is directly connected to the tube socket. The spark gaps should be connected to all picture tube electrodes at the socket according to the figure below; they are not required on the heater pins. No other connections between the outer conductive coating and the chassis are permissible. The spark gaps should be designed for a breakdown voltage at the focusing electrode (g3) of 10,5 kV, and at the other electrodes of 1,5 to 2 kV. The values of the series isolation resistors should be as high as possible (min 1,5 kΩ) without causing deterioration of the circuit performance. The resistors should be able to withstand an instantaneous surge of 20 kV for the focusing circuit and 12 kV for the remaining circuits without arcing.

Additional information is available on request.

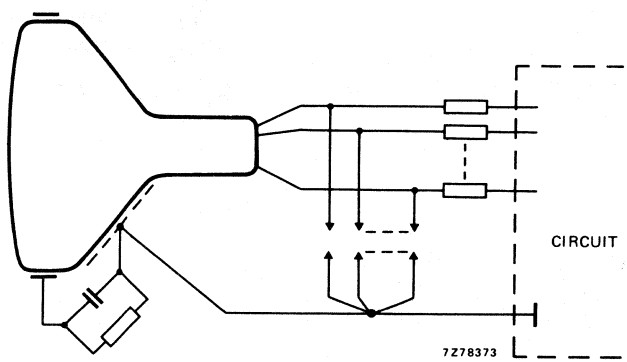

Fig. 18 Flashover protection circuit.

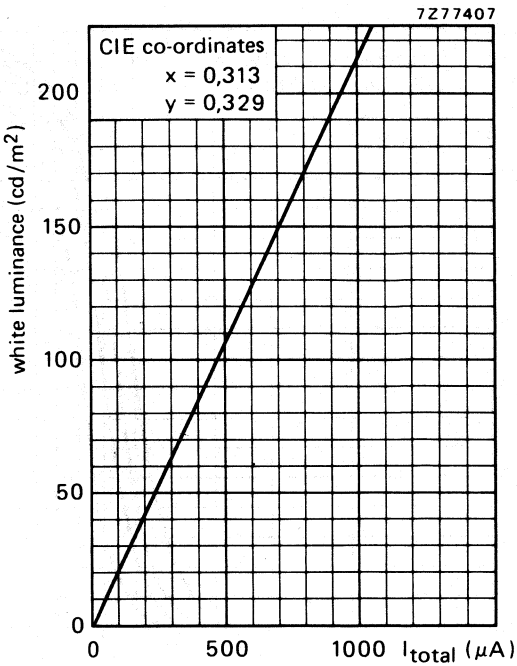

Fig. 19 Luminance at the centre of the screen as a function of I_{total}. Scanned area 518 mm x 390 mm.

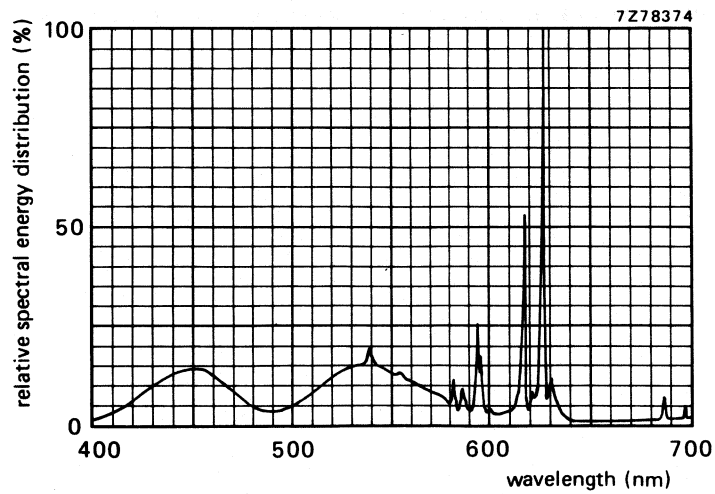

Fig. 20 Simultaneous excitation of red, green and blue phosphor, measured in a tube, to produce white of x = 0,313, y = 0,329. Exact shape of the peaks depends on the resolution of the measuring apparatus.

Colour co-ordinates:	x	y
red	0,635	0,340
green	0,315	0,600
blue	0,150	0,060

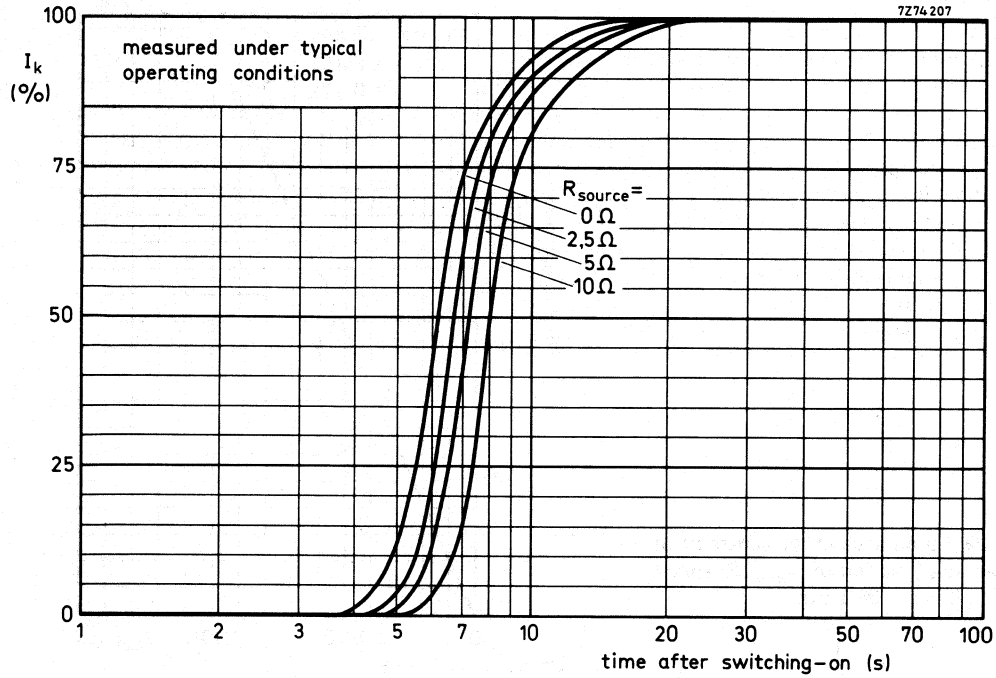

Fig. 21 Cathode heating time to attain a certain percentage of the cathode current at equilibrium conditions.

DEGAUSSING

The picture tube is provided with an internal magnetic shield. This shield and the shadow mask with its suspension system may be provided with an automatic degaussing system, consisting of two coils covering top and bottom cone parts.

For proper degaussing an initial magnetomotive force (MMF) of 300 ampere-turns is required in each of the coils. This MMF has to be gradually decreased by appropriate circuitry. To prevent beam landing disturbances by line-frequency currents induced in the degaussing coils, these coils should be shunted by a capacitor of sufficiently high value. In the steady state, no significant MMF should remain in the coils ($\leqslant 0{,}3$ ampere-turns).

If single-phase power rectification is employed in the TV circuitry, provision should be included to prevent asymmetric distortion of the AC voltage applied to the degaussing circuit due to high DC inrush currents.

To ease the mounting of the coils, the rimband is provided with rectangular holes. An example is given below.

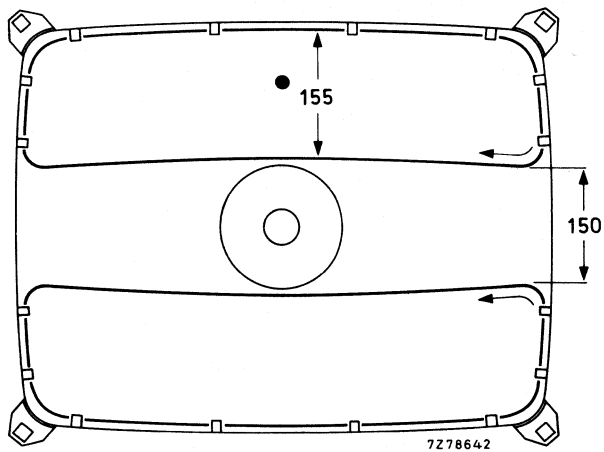

Fig. 22 Position of degaussing coils on the picture tube.

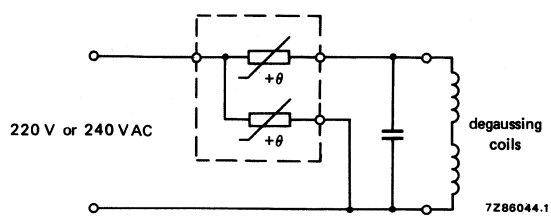

Fig. 23 Degaussing circuit using dual PTC thermistor 2322 662 98009.

Data of each degaussing coil

Circumference	135 cm
Number of turns	60
Copper-wire diameter	0,4 mm
Aluminium-wire diameter	0,5 mm
Resistance	11 Ω

DEFLECTION UNIT

QUICK REFERENCE DATA

Picture tube	A66-540X
gun arrangement	in line
diagonal	66 cm (26 in)
neck diameter	36,5 mm
Deflection angle	110°
Line deflection current, edge to edge at 25 kV	5,10 A (p-p)
Inductance of line coils	1,50 mH
Field deflection current, edge to edge at 25 kV	2,00 A (p-p)
Resistance of field coils (potentiometer R1 included)	5,8 Ω

APPLICATION

This deflection unit is for use with 110° in-line colour picture tube A66-540X, in conjunction with e.g.: diode-split line output transformer AT2076/70A and linearity control unit AT4042/42 or AT4042/30.

DESCRIPTION

The deflection unit consists of flangeless line and field deflection coils, a one piece ferrite ring and a one piece coil carrier.

Connection to the deflection coils can be made via a connector (contact pins 1 to 4) or solder tags 1a to 4a, see Fig. 1a.

MECHANICAL DATA

Outlines

Dimensions in mm

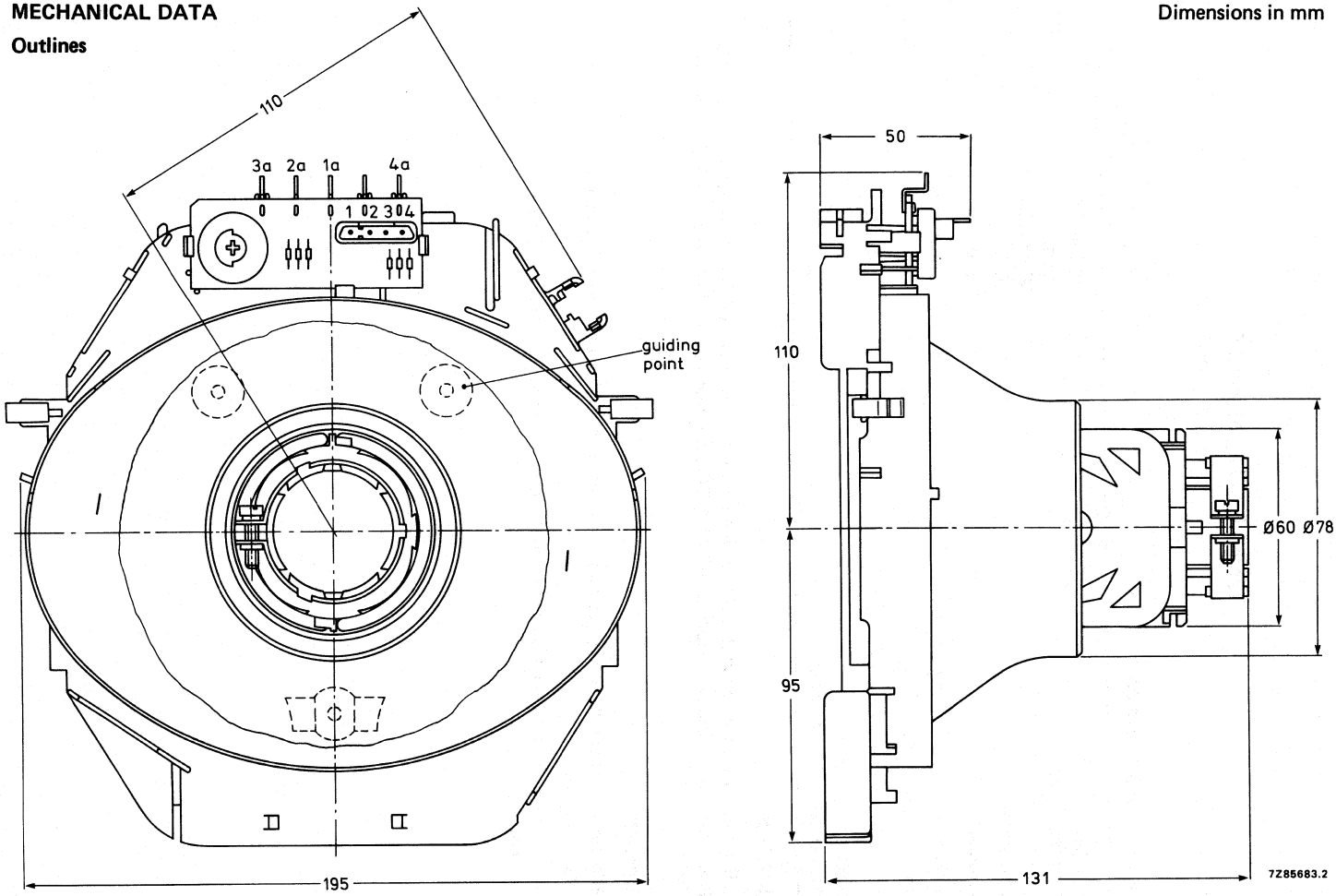

Fig. 1a Maximum dimensions.

The deflection unit fits a tube with a neck diameter of $36{,}5\ ^{+1{,}3}_{-0}$ mm.

Maximum operating temperature (average copper temperature measured with resistance method)	+ 90 °C
Storage temperature range	−20 to + 90 °C
Flame retardent	according to UL 1413, category 94, V-1

Mounting

The deflection unit can simply be pushed on the neck of a picture tube.

Both on the neck of the tube and on the deflection unit, there are 3 reference surfaces to establish angular and axial positioning.

Once the unit is mounted the combination is perfectly aligned and requires no further adjustment for static convergence, colour purity and raster orientation.

The unit must be pressed against the reference surfaces on the cone of the picture tube with a force of 20 ± 5 N and fixed by tightening the screw in the clamping ring at the rear with a torque of $1{,}0\ ^{+0{,}4}_{-0{,}2}$ Nm.

Maximum axial force exerted on the screw is 20 N.

ENVIRONMENTAL TEST SPECIFICATIONS

Vibration	IEC 68-2-6 (test Fc)
Shock	IEC 68-2-27 (test Ea; 35g)
Bump	IEC 68-2-29 (test Eb; 25g)
Cold	IEC 68-2-1 (test Ab)
Dry heat	IEC 68-2-2 (test Bb)
Damp heat, steady state	IEC 68-2-3 (test Ca)
Cyclic damp heat	IEC 68-2-30 (test Db)
Change of temperature	IEC 68-2-14 (test Nb)

ELECTRICAL DATA

Line coils	
Inductance	1,50 mH ± 4%
Resistance at 25 °C	1,3 Ω ± 10%
Magnetic flux	7,6 mWb ± 5%
Line deflection current, raster scan, at 25 kV	5,10 A (p-p)
Raster scan	518 mm
Field coils	
Inductance	9,70 mH ± 10%
Resistance at 25 °C (potentiometer R1 included)	5,8 Ω ± 7%
Field deflection current, raster scan, at 25 kV	2,00 A (p-p)
Raster scan	390 mm
Cross-talk	a voltage of 1 V, 15 kHz applied to the line coils causes no more than 20 mV across the field coils
Insulation resistance	
between line and field coils, at 3 kV (DC)	> 10 MΩ
between field coils and ferrite ring, at 300 V (DC)	> 10 MΩ

Connections
(see also Fig. 1a).

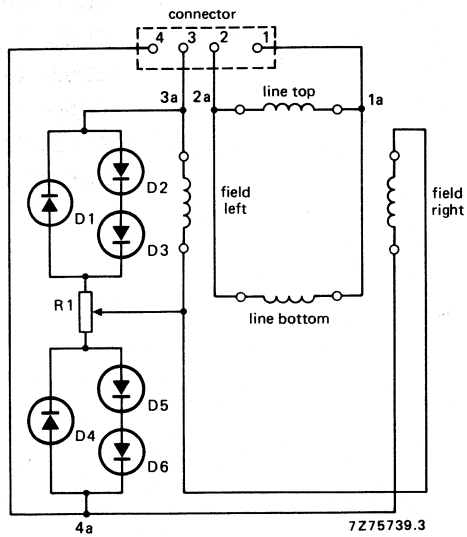

Fig. 2 Connection diagram.

Notes to Fig. 2

- Contacts 1 and 1a must be connected to the live side of the line circuitry, contacts 3 and 3a must be connected to the live side of the field circuitry.
- Matching female Stocko connector: MKF 804-1-0-404.
- D1 to D6 = BAS11, BAX18, BAX18A, BAV10 or BAW62.
- R1 = 180 Ω.

COLOUR MONITOR TUBE ASSEMBLIES

SURVEY OF MONITOR TUBES

M34EAQ00X
M34EAQ10X
M37-103X/../../11..
M37-108X/../../11..
M37-118X/../../11..

MEDIUM RESOLUTION COLOUR DISPLAY TUBE ASSEMBLIES

- 90° deflection angle
- In-line gun, thermally stable; electrostatic hi-bi-potential for improved focus
- 29,1 mm neck diameter
- Phosphor: P22 — medium short persistence
- Dark glass featuring extra high contrast performance
- Soft-Flash technology offering improved set reliability
- Slotted shadow mask optimized for minimum moiré
- 0,42 mm phosphor pitch
- Phosphor lines follow glass contour
- Quick-heating cathodes
- Internal magnetic shield
- Rimband type implosion protection
- Supplied as a pre-aligned, self-converging and raster correction free tube-coil assembly; dynamic convergence is not required
- M34EAQ00X . .: assembly with display tube with non-glare screen
- M34EAQ10X . .: assembly with display tube with high gloss screen

QUICK REFERENCE DATA

Deflection angle	90°
Face diagonal	37 cm (14 inch)
Overall length	341,5 mm
Neck diameter	29,1 mm
Resolution: number of resolvable pixels*	480 x 360
Heating	6,3 V, 685 mA
Anode voltage	25 kV
Focusing voltage	28% of anode voltage

* Pixel = picture element.

ELECTRON-OPTICAL DATA

Electron gun system		unitized in-line
Focusing method		electrostatic
Focus lens		bi-potential
Convergence method		magnetic
Deflection method		magnetic
Deflection angles		
diagonal		approx. 90°
horizontal		approx. 78°
vertical		approx. 60°

ELECTRICAL DATA

Tube

Capacitances		
anode to external conductive coating including rimband	$C_{a(m+m')}$	max. 1600 pF min. 800 pF
grid 1 of any gun to all other electrodes	C_{g1}	17 pF
cathodes of all guns, connected in parallel, to all other electrodes	C_k	15 pF
cathode of any gun to all other electrodes	C_{kR}, C_{kG}, C_{kB}	5 pF
focusing electrode to all other electrodes	C_{g3}	6 pF
Heating		indirect by AC or DC
heater voltage	V_f	6,3 V
heater current	I_f	685 mA

Deflection unit

Line deflection coils, Fig. 1		parallel connected
inductance		1,89 mH
resistance		2,0 Ω
Line deflection current, edge to edge, at 25 kV		3,0 A(p-p)

Field deflection coils, Fig. 2	in parallel	in series
inductance	29 mH	116 mH
resistance	13,5 Ω	54 Ω
Field deflection current, edge to edge, at 25 kV	0,83 A(p-p)	0,41 A(p-p)

Maximum permissible voltage	
between line and field coils	3000 V DC
between field coils and core	300 V
Insulation resistance	
between line and field coils, at 1 kV DC	500 MΩ
between line coil and core clamping ring, at 500 V DC	30 MΩ
between field coil and core clamping ring, at 1000 V DC	100 MΩ
Cross-talk	a voltage of 1 V, 15625 Hz applied to the line coils causes no more than 20 mV across the field coils

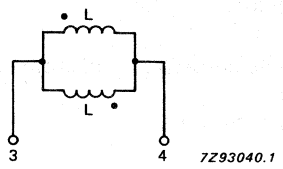

Fig. 1 Line coils.

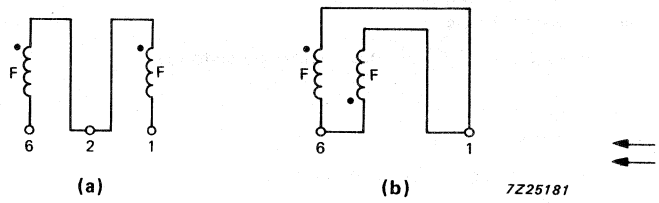

Fig. 2 Field coils;
(a) series connected;
(b) parallel connected.

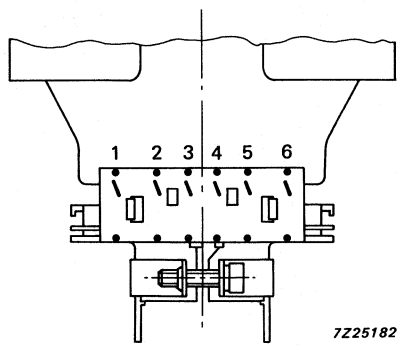

Fig. 3 Terminal location of deflection coils.

OPTICAL DATA

Screen	metal-backed phosphor stripes; phosphor lines follow glass contour
Screen finish	
M34EAQ00X	etched
M34EAQ10X	high gloss
Minimum useful screen dimensions	
diagonal	335,4 mm (13,20 in)
horizontal axis	280,8 mm (11,06 in)
vertical axis	210,6 mm (8,29 in)
area	580 cm^2 (89,90 in^2)
Recommended screen dimensions for alphanumeric display	
→ horizontal axis	240 mm (9,45 in)
→ vertical axis	180 mm (7,09 in)
Phosphor: P22 — medium short persistence	
red	rare earth, europium activated, pigmented
green	sulphide type
blue	sulphide type, pigmented
Phosphor colour co-ordinates	
red	x = 0,635; y = 0,340
green	x = 0,315; y = 0,600
blue	x = 0,150; y = 0,060
Horizontal phosphor pitch	0,42 mm (0,016 in)
Light transmission of face glass at centre	46%
Number of resolvable pixels	480 x 360

MECHANICAL DATA see also the figures 4a to 10 inclusive

Overall length	341,6 ± 5 mm (13,45 ± 0,20 in)	
Neck diameter	29,1 mm (1,15 in)	
Greatest dimensions of tube		
diagonal (exluding mounting lugs)	max. 370,5 mm (max. 14,59 in)	←
width	max. 320,5 mm (max. 12,6 in)	←
height	max. 250,5 mm (max. 9,86 in)	←
Bulb		
funnel	EIAJ-JF370AA01	←
panel	EIAJ-JP370AB12	←
Implosion protection	shrink type (UL approved)	
Anode contact designation	JEDEC J1-21; IEC 67-III-2	
Base designation	10-pin base JEDEC B10-277	
Basing designation	see Fig. 10	
Mass	approx. 6 kg (13,2 lbs)	
Mounting position	anode contact on top	

Notes to outline drawings

1. Configuration of outer conductive coating may be different but will contain the contact area as shown in the drawing.
2. To clean this area, wipe only with a soft lintless cloth.
3. One of the four mounting lugs may deviate 1 mm (0,04 in) max. from the plane of the other three lugs. This deviation is incorporated in the tolerance of ± 1,8 mm (0,07 in).
4. Minimum space to be reserved for mounting lug.
5. The position of the mounting screw in the cabinet must be within a circle of 9,5 mm (0,37 in) diameter drawn around the true geometrical positions, i.e. the corners of a rectangle of 311,4 x 243,2 mm (12,26 x 9,57 in).
6. Not applicable.
7. The socket for this base should not be rigidly mounted; it should have flexible leads and be allowed to move freely. After mounting of the tube in the cabinet note that the position of the base can fall within a circle, having a diameter of max. 50 mm (1,968 in), concentric with an imaginary tube axis.
   The mass of the mating socket with circuitry should not be more than 150 g, maximum permissible torque is 40 mNm.
8. Small cavity contact J1-21, IEC 67-III-2.
9. The X, Y and Z reference points are located on the outside surface of the face plate 3,2 mm (0,13 in) beyond the intersection of the minor, major and diagonal screen axis respectively, with the minimum published screen.

MECHANICAL DATA (continued)

The dimensions are given in mm, and in inches between brackets.

Notes are on the preceding page.

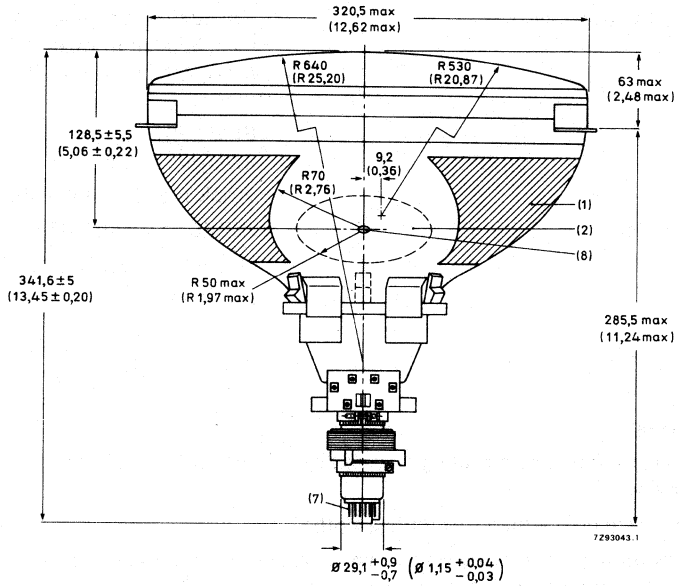

Fig. 4a.

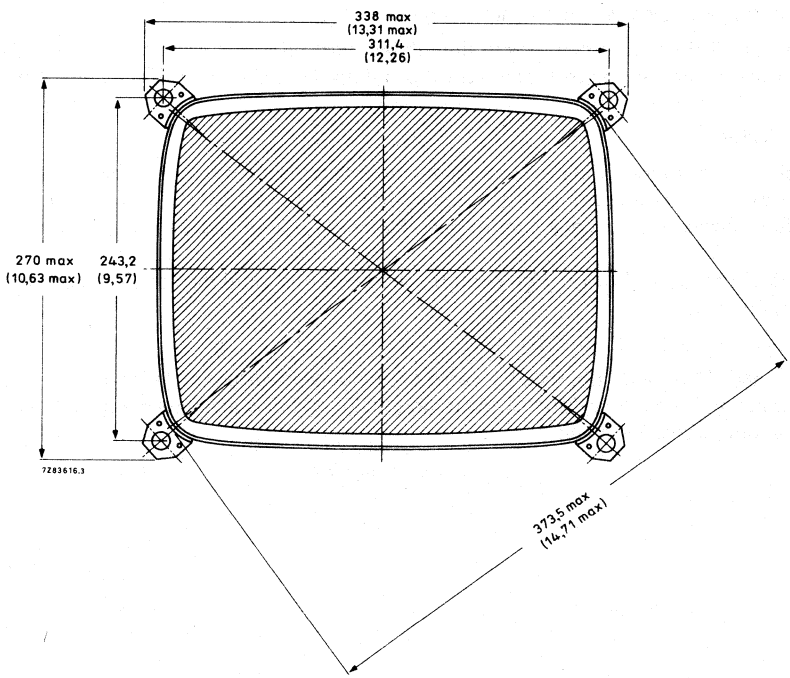

Fig. 4b.

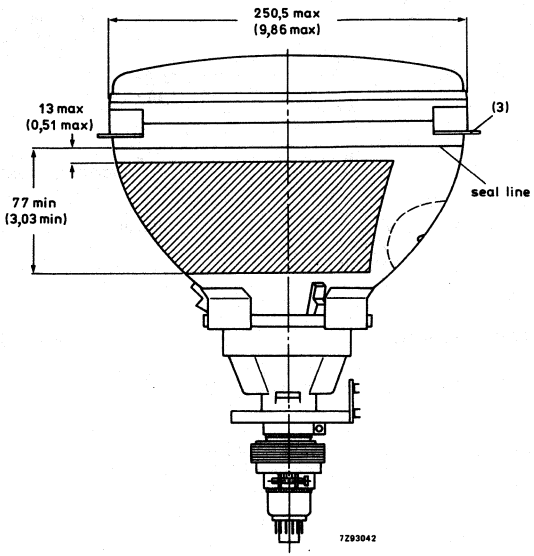
250,5 max
(9,86 max)
13 max
(0,51 max)
(3)
seal line
77 min
(3,03 min)
7Z93042

Fig. 4c.

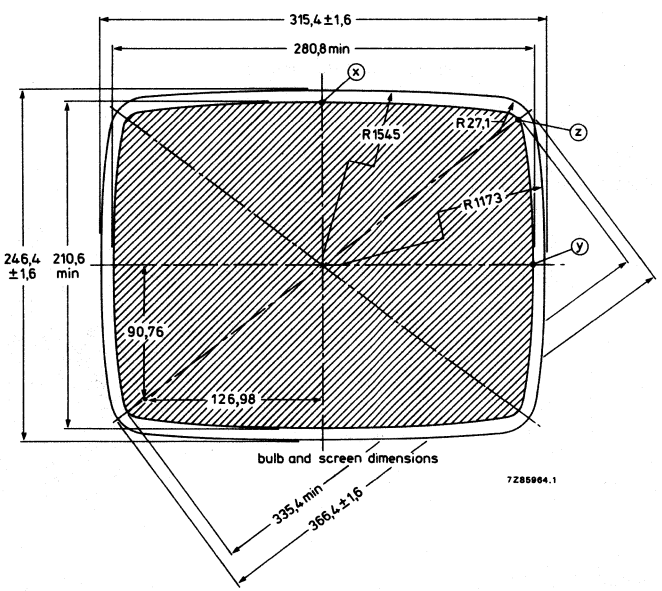
315,4 ±1,6
280,8 min
x
R1545
R27,1
z
R1173
y
246,4 ±1,6
210,6 min
90,76
126,98
bulb and screen dimensions
7Z85964.1
335,4 min
366,4 ±1,6

Fig. 5.

MECHANICAL DATA (continued)

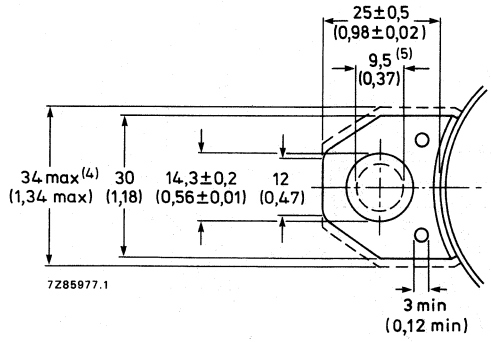

Fig.6 Lug dimensions.

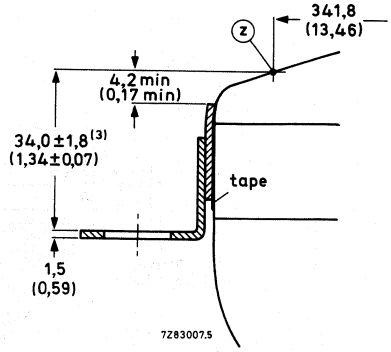

Fig.7 Lug position.

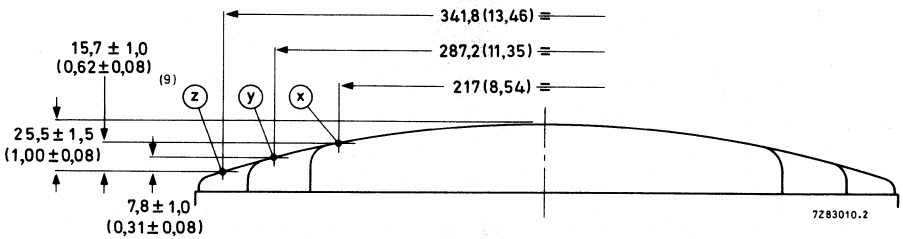

Fig.8 Screen reference points.

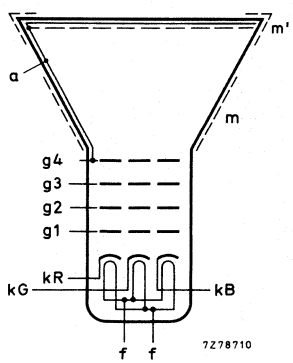

Fig.9 Electrode configuration.

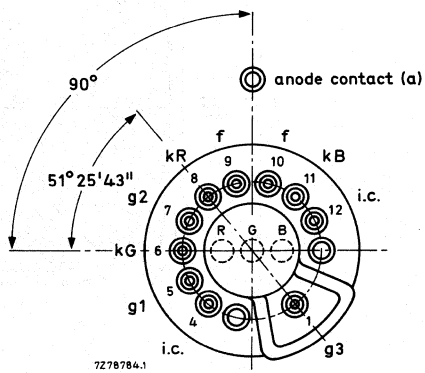

i.c. = internally connected (not to be used).

Fig.10 Pin arrangement.

Maximum cone contour

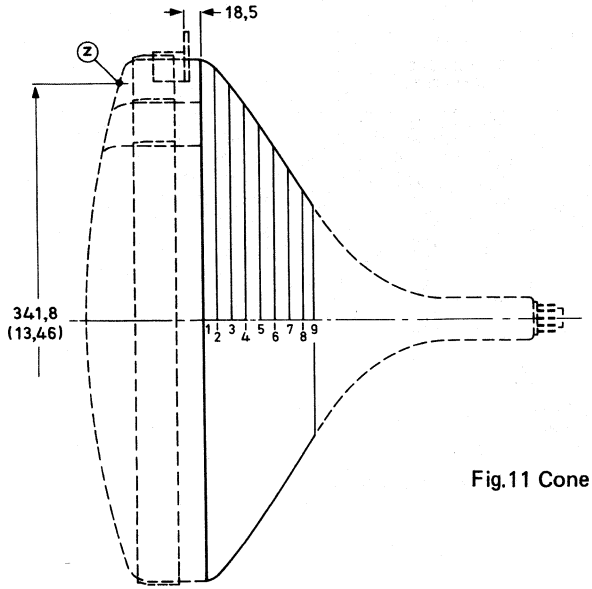

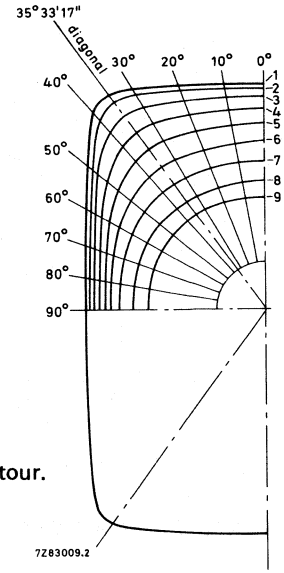

Fig.11 Cone contour.

Table 1 Cone contour data

section	nom. distance from section 1	distance from centre (max. values)														
		0°	10°	20°	25°	30°	32° 30'	diag. axes	37° 30'	40°	45°	50°	60°	70°	80°	90°
Dimensions in mm																
1	0	157,2	159,4	166,3	171,7	178,2	181,2	183,6	183,3	180,0	167,9	156,5	140,0	129,8	124,2	122,4
2	10	154,7	156,9	163,5	168,5	174,1	176,6	178,1	177,7	174,8	164,4	153,7	137,8	127,9	122,4	120,7
3	20	148,8	150,7	156,3	160,0	163,5	164,6	165,0	164,4	162,6	156,0	147,7	133,6	124,4	119,3	117,7
4	30	140,4	142,1	146,2	148,6	150,5	151,0	151,1	150,7	149,6	145,6	140,0	128,6	120,3	115,7	114,2
5	40	130,3	131,3	134,0	135,4	136,5	136,8	136,8	136,6	136,1	134,1	130,8	122,7	115,9	111,7	110,3
6	50	118,2	118,8	120,1	120,9	121,6	121,8	122,0	122,0	121,9	121,2	119,8	115,4	110,5	107,0	105,8
7	60	104,9	104,7	105,1	105,5	106,0	106,2	106,5	106,7	106,9	107,1	107,0	105,6	103,1	100,8	99,8
8	70	90,6	89,9	89,8	90,0	90,4	90,6	90,9	91,1	91,4	91,9	92,3	92,5	91,7	90,4	89,7
9	77	79,9	79,1	79,0	79,1	79,4	79,6	79,9	80,1	80,4	80,9	81,4	81,8	81,4	80,5	79,9
Dimensions in inches																
1	0	6,19	6,28	6,55	6,76	7,02	7,13	7,23	7,22	7,09	6,61	6,16	5,51	5,11	4,89	4,82
2	0,39	6,09	6,18	6,44	6,63	6,85	6,95	7,01	7,00	6,88	6,47	6,05	5,43	5,04	4,82	4,75
3	0,79	5,86	5,93	6,15	6,29	6,44	6,48	6,50	6,47	6,40	6,14	5,81	5,26	4,90	4,70	4,63
4	1,18	5,53	5,59	5,76	5,85	5,92	5,94	5,95	5,93	5,89	5,73	5,51	5,06	4,74	4,56	4,50
5	1,57	5,13	5,17	5,28	5,33	5,37	5,39	5,39	5,38	5,36	5,27	5,15	4,83	4,56	4,40	4,34
6	1,97	4,65	4,68	4,73	4,76	4,79	4,80	4,80	4,80	4,80	4,77	4,72	4,54	4,35	4,21	4,17
7	2,36	4,13	4,12	4,14	4,15	4,17	4,18	4,19	4,20	4,21	4,22	4,21	4,16	4,06	3,97	3,94
8	2,76	3,57	3,54	3,54	3,54	3,56	3,57	3,58	3,59	3,60	3,62	3,63	3,64	3,61	3,56	3,53
9	3,03	3,15	3,11	3,11	3,11	3,13	3,13	3,15	3,15	3,17	3,19	3,20	3,22	3,20	3,17	3,15

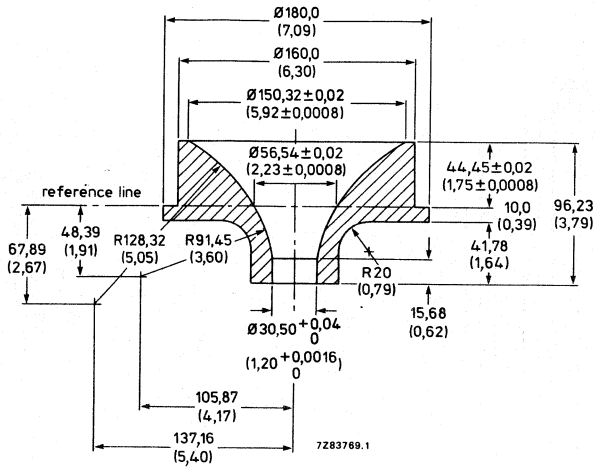

Fig.12 Reference line gauge.

10-PIN BASE JEDEC B10-277

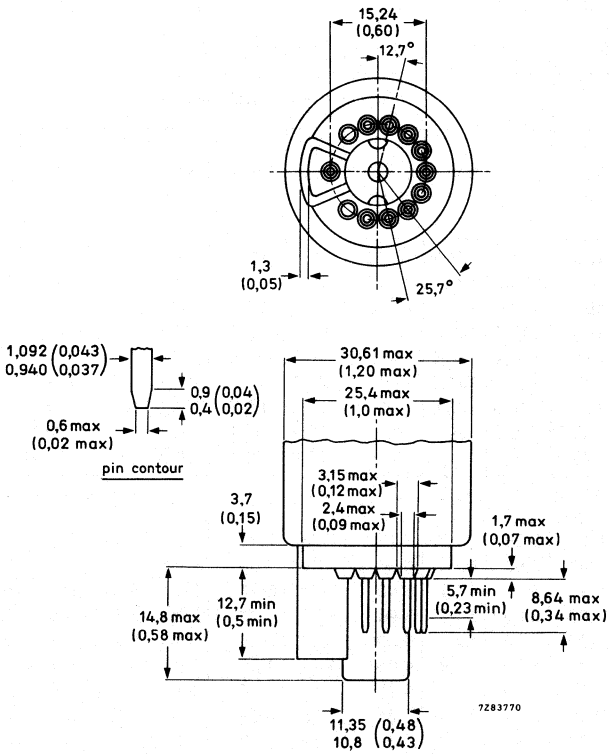

Fig.13 JEDEC base.

RECOMMENDED OPERATING CONDITIONS (cathode drive)

The voltages are specified with respect to grid 1.

Anode voltage	$V_{a,g4}$	25 kV
Grid 3 (focusing electrode) voltage	V_{g3}	6,6 to 7,5 kV
Grid 2 voltage	V_{g2}	see Fig. 14
Luminance at the centre of the screen*	L	80 cd/m² (23,2 foot lambert)

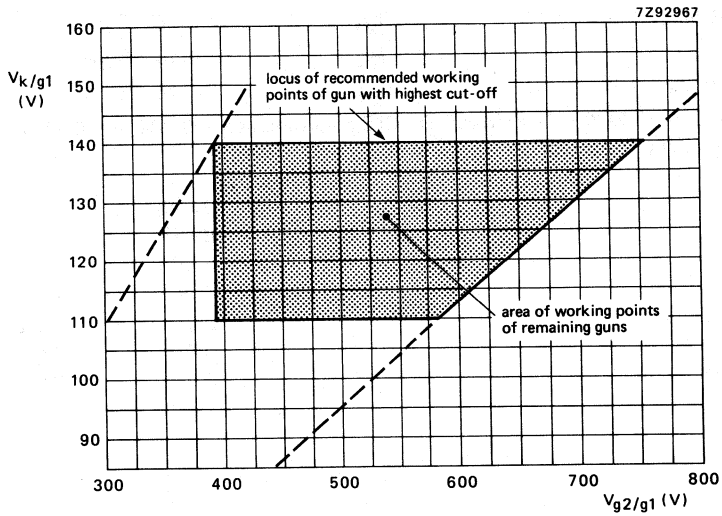

Fig. 14 Spot cut-off design chart.

Grid 2 voltage (V_{g2}) adjusted for highest gun spot cut-off voltage V_k = 140 V.

Remaining guns adjusted for spot cut-off by means of cathode voltage.

V_{g2} range 390 to 760 V

V_k range 110 to 140 V.

Adjustment procedure:

Set the cathode voltage (V_k) for each gun at 140 V; increase the grid 2 voltage (V_{g2}) from approx. 400 V to the value at which one of the colours becomes just visible. Now decrease the cathode voltage of the remaining guns so that the other colours also become visible.

* Tube setting adjusted to produce white of 9300K + 27 M.P.C.D. (x = 0,281, y = 0,311), focused raster, current density 0,4 μA/cm².

EQUIPMENT DESIGN VALUES (each gun if applicable)

The values are valid for anode voltages between 20 and 27,5 kV.
The voltages are specified with respect to grid 1.

Grid 3 (focusing electrode) voltage	V_{g3}	26,6 to 29,8% of anode voltage
Grid 2 voltage and cathode voltage for visual extinction of focused spot	V_{g2} and V_k	see Fig. 14
Difference in cut-off voltages between guns in any tube	ΔV_k	lowest value ⩾ 80% of highest value
Cathode drive characteristic		see Fig. 15
Grid 3 (focusing electrode) current	I_{g3}	−5 to + 5 μA
Grid 2 current	I_{g2}	−5 to + 5 μA
Grid 1 current at V_k = 100 V	I_{g1}	−5 to + 5 μA

To produce white of 9300 K + 2700 M.P.C.D. (CIE co-ordinates x = 0,281, y = 0,311):

percentage of total anode current supplied by each gun			
red gun		27,9%	
green gun		39,1%	
blue gun		33,0%	
ratio of anode currents	min.	av.	max.
red gun to green gun	0,5	0,7	1,0
red gun to blue gun	0,6	0,9	1,2
blue gun to green gun	0,6	0,9	1,2

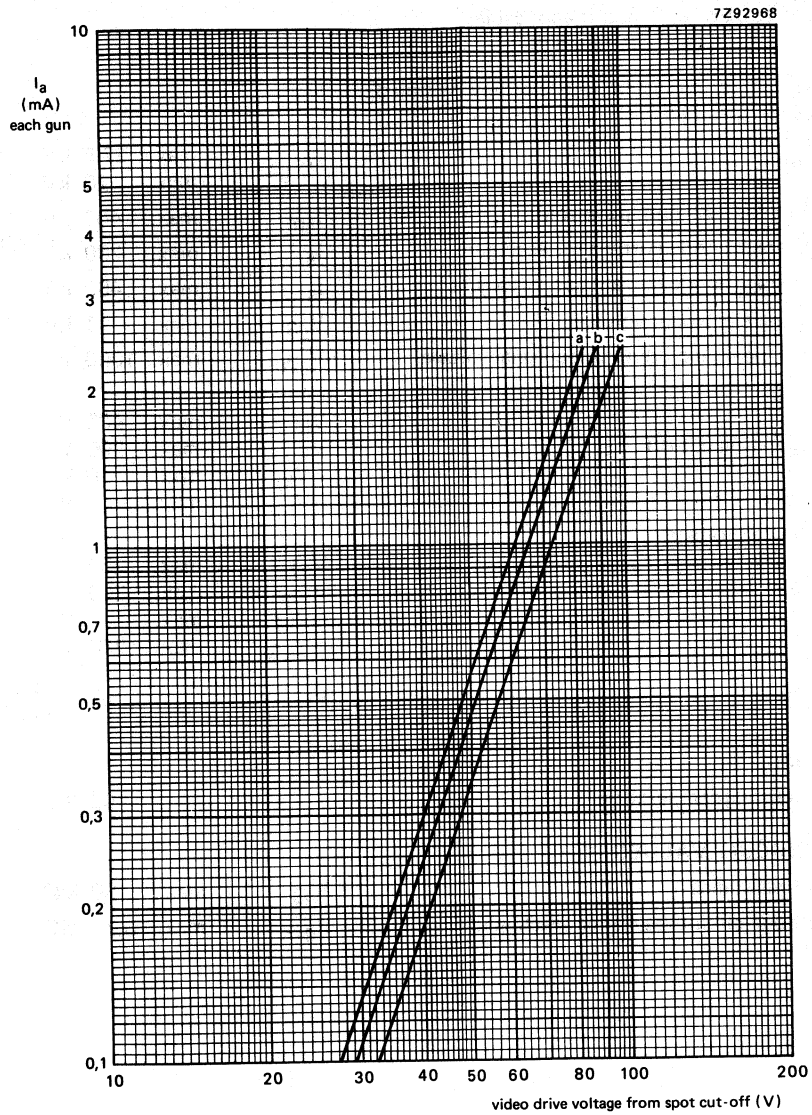

Fig. 15 Typical cathode drive characteristics.

V_{g2} adjusted to provide spot cut-off for
V_k = 90 V (curve a),
V_k = 110 V (curve b),
V_k = 140 V (curve c).

V_f = 6,3 V.
V_{g4} = 25 kV.
V_{g3} adjusted for focus.

LIMITING VALUES (each gun if applicable)

Tube

Design maximum rating system unless otherwise stated.
The voltages are specified with respect to grid 1.

				notes
Anode voltage	$V_{a,g4}$	max.	27,5 kV	1 and 2
		min.	20 kV	3
Anode current for each gun, peak value	I_{ap}	max.	400 μA	
Long term average anode current for each gun	I_a	max.	200 μA	
Long term average anode current for three guns	I_a	max.	450 μA	4
Grid 3 (focusing electrode) voltage	V_{g3}	max.	11 kV	
Grid 2 voltage, peak, including video signal voltage	V_{g2p}	max.	1000 V	
Cathode voltage				
positive	V_k	max.	400 V	
positive operating cut-off	V_k	max.	200 V	
negative	$-V_k$	max.	0 V	
negative peak	$-V_{kp}$	max.	2 V	
Cathode to heater voltage				
positive	V_{kf}	max.	250 V	
positive peak	V_{kfp}	max.	300 V	1
negative	$-V_{kf}$	max.	0 V	
negative peak	$-V_{kfp}$	max.	200 V	1
Heater voltage	V_f		6,3 V $^{+5\%}_{-10\%}$	1 and 5

Deflection unit

Maximum operating temperature			95 °C	6

LIMITING CIRCUIT VALUES

Grid 3 circuit resistance	R_{g3}	max.	30 MΩ	
Grid 1 to cathode circuit resistance (each gun)	R_{g1k}	max.	0,75 MΩ	

Notes

1. Absolute Maximum rating system.
2. During adjustment on the production line this value is likely to be surpassed considerably. It is therefore strongly recommended first to make the necessary adjustments for normal operation.
3. Operation of the tube at lower voltages impairs the luminance and resolution.
4. The short term average anode current should be limited by circuitry to 600 μA.
5. For maximum cathode life and optimum performance, it is recommended that the heater supply be designed for 6,3 V at zero beam current.
6. Maximum average copper wire temperatures.

FLASHOVER PROTECTION

With the high voltage used with this tube (max. 27,5 kV) internal flashovers may occur. As a result of the Soft-Flash technology these flashover currents are limited to approx. 60 A offering higher set reliability, optimum circuit protection and component savings.
Primary protective circuitry using properly grounded spark gaps and series isolation resistors (preferably carbon composition) is still necessary to prevent tube damage. The spark gaps should be connected to all picture tube electrodes at the socket according to the figure below; they are not required on the heater pins. No other connections between the outer conductive coating and the chassis are permissible.
The spark gaps should be designed for a breakdown voltage at the focusing electrode (g3) of 11 kV ($1{,}5 \times V_{g3}$ max. at $V_{a,g4}$ = 25 kV), and at the other electrodes of 1,5 to 2 kV.
The values of the series isolation resistors should be as high as possible (min. 1,5 kΩ) without causing deterioration of the circuit performance. The resistors should be able to withstand an instantaneous surge of 20 kV for the focusing circuit and 12 kV for the remaining circuits without arcing.
Additional information is available on request.

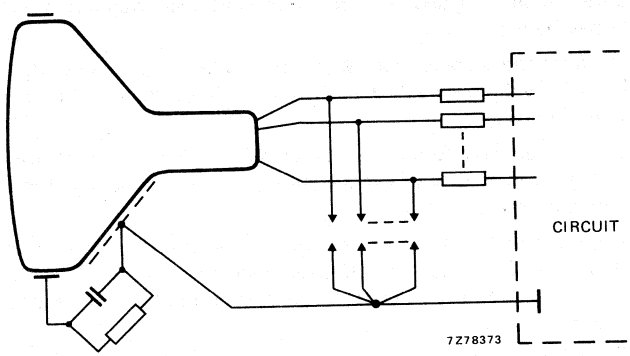

Fig.16 Flashover protection circuit.

X-RADIATION LIMIT

Maximum anode voltage at which the X-radiation emitted will not exceed 0,5 mR/h at an anode current of 300 μA

entire tube	31 kV*
face-plate only	33 kV

Warning:

If the value for the tube face only is used as design criterion, adequate shielding must be provided in the monitor for the anode contact and/or certain portions of the tube funnel and panel skirt to insure that the X-radiation from the monitor is attenuated to a value equal to or lower than that specified for the face of the tube.

Maximum voltage difference between anode and focus electrode at which the X-radiation will not exceed 0,5 mR/h 30 kV

Warning:

If the voltage value above can be exceeded in the monitor additional attenuation of the X-radiation through the tube neck may be required.

The X-radiation emitted from this display tube, as measured in accordance with the procedure of JEDEC Publication No. 64D, will not exceed 0,5 mR/h throughout the useful tube life when operated within the 'Design maximum ratings'.

The tube should not be operated beyond its 'Design maximum ratings' stated above, but its X-radiation will not exceed 0,5 mR/h for anode voltage and current combinations given by the isoexposure-rate limits characteristics shown on the next page.

Operation above the values shown by the curve may result in failure of the monitor to comply with the Federal Performance Standard of the U.S. for Television Receivers, Section 1020. 10 of Part 1020 of Title 21, Code of Federal Regulation (PL90-602) as published in the Federal Register Volume 38, No. 198, Monday, October 15, 1973.

Maximum X-radiation as a function of anode voltage at 300 μA anode current is shown by the curve on the next page. X-radiation at a constant anode voltage varies linearly with anode current.

* This rating applies only if the anode connector used by the set maker provides the necessary attenuation to reduce the X-radiation from the anode contact by a factor equal to the difference between the anode button isoexposure-rate limit curve and the isoexposure-rate limit curve for the entire tube.

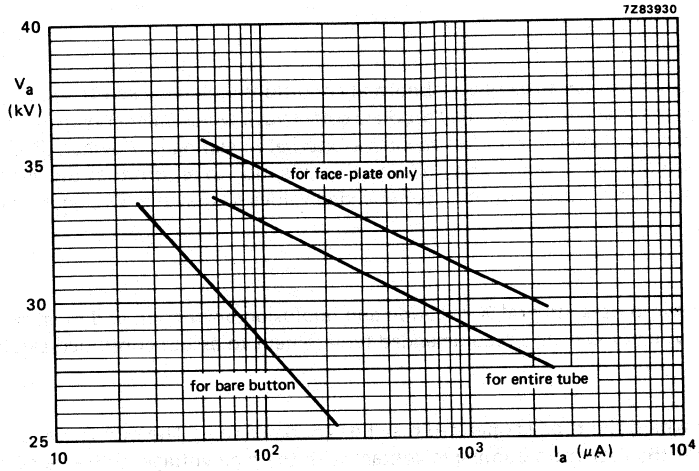

Fig. 17 0,5 mR/h isoexposure-rate limit curve.

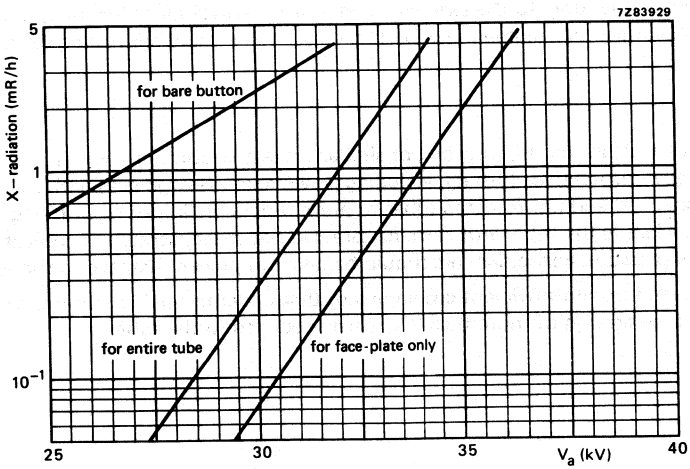

Fig. 18 X-radiation limit curve at a constant anode current of 300 μA.

WARNINGS

X-radiation

Operation of this colour display tube under abnormal conditions which exceed the 0,5 mR/h iso-dose rate curve shown on the preceding page may produce soft X-rays which may constitute a health hazard on prolonged exposure at close range unless adequate external screening is provided. Precautions must therefore be exercised during servicing of monitors using this tube to ensure that the anode voltage and other tube voltages are adjusted to the recommended values so that the 'Design maximum ratings' are not exceeded.

Replacement

This display tube incorporates integral X-radiation and implosion protection and must be replaced with a tube of the same type number or a recommended replacement to assure continued safety.

Shock hazard

The high voltage at which the tube is operated may be very dangerous. The monitor should include safeguards to prevent the user from coming in contact with the high voltage. Extreme care should be taken in servicing or adjustment of any high-voltage circuit.

Caution must be exercised during the replacement or servicing of the display tube since a residual electrical charge may be held by the high-voltage capacitor formed by the external and internal conductive coatings of the display tube funnel. To remove any residual charge, short the anode contact button, located in the funnel of the tube, to the external conductive coating before handling the tube. Discharging the high voltage to isolated metal parts such as cabinets and control brackets may produce a shock hazard.

Handling

Assemblies should be kept in the shipping box or similar protective container will just prior to installation. Wear heavy protective clothing, including gloves and safety goggles with side shields, in areas containing unpacked and unprotected tubes to prevent possible injury from flying glass in the event a tube breaks. Handle the tube with extreme care. Do not strike, scratch or subject the tube to more than moderate pressure. Particular care should be taken to prevent damage to the seal area.

The packing should incorporate sufficient cushioning so that under normal conditions of shipment or handling an impact acceleration of more than 35g is never applied to the tube.

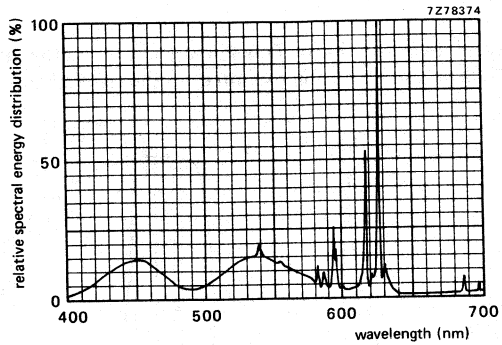

Fig. 19 Simultaneous excitation of red, green and blue phosphor, measured in a tube, to produce white of x = 0,281, y = 0,311. Exact shape of the peaks depends on the resolution of the measuring apparatus.

Colour co-ordinates:	x	y
red	0,635	0,340
green	0,315	0,600
blue	0,150	0,060

DEGAUSSING

The display tube has an internal magnetic shield. This shield and the shadow mask with its suspension system may be automatically degaussed by a coil mounted on the cone of the picture tube as shown in Fig. 20.

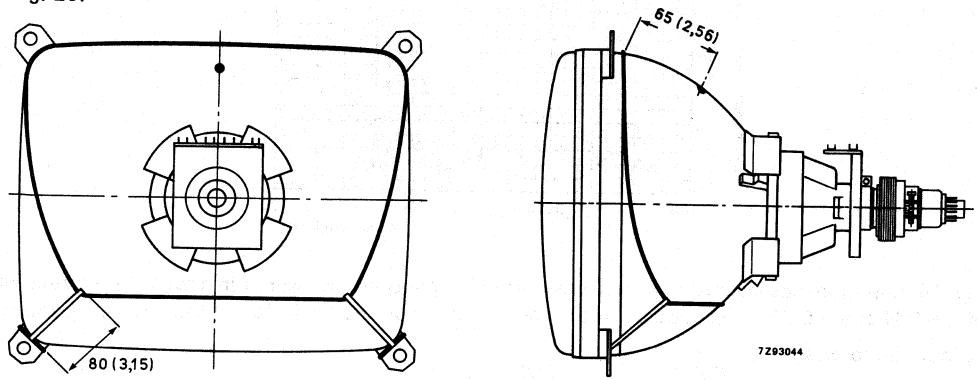

Fig. 20 Position of degaussing coil on the display tube; dimensions are given in mm, and in inches between brackets.

For proper degaussing an initial magnetomotive force (MMF) of 600 ampere-turns is required in the coil. This MMF has to be gradually decreased. In the steady state, no significant MMF should remain in the coil ($\leqslant$ 0,6 ampere-turns).

If single-phase power rectification is used, provision should be included to prevent asymmetric distortion of the AC voltage applied to the degaussing circuit due to high DC inrush currents.

An example of a degaussing circuit and coil data for various mains voltages are given below.

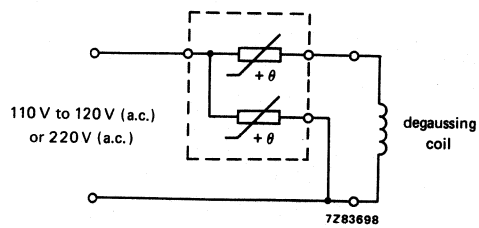

Fig. 21 Degaussing circuit using dual PTC thermistor.

Data of degaussing coil

	110 to 120 V AC	220 V AC
Circumference	90 cm (35,4 in)	90 cm (35,4 in)
Number of turns	70	120
Copper-wire diameter	0,45 mm (0,018 in)	0,3 mm (0,012 in)
Resistance	6,7 Ω	25,9 Ω
Catalogue number of dual PTC thermistor	8222 298 73091	2322 662 98009

CONVERGENCE AND RASTER SPECIFICATION

The maximum misconvergence after 15 min operation is given in Table 2.

Test conditions (all voltages are measured with respect to grid 1)

Heater voltage	V_f	6,3 V
Grid 2 voltage	V_{g2}	525 V
Grid 3 voltage	V_{g3}	to be adjusted for focus at screen centre, using cross-hatch pattern or characters H, at anode current of 300 μA (peak) per gun
Anode voltage	V_a	25 kV
Test pattern		cross-hatch pattern
Ambient temperature	T_{amb}	25 ± 5 °C

Notes

1. Misconvergence is the distance between centres of the red, green, blue lines at the screen using rectangular co-ordinates.
2. Anode and/or focusing voltage and terrestrial magnetism affect the static convergence performance.

Table 2 Maximum misconvergence after 15 min operation

location (see Fig. 22)	type or error	max. error between any colour
centre	red-green-blue line separation in either the horizontal or vertical direction	0,3 mm
area A		0,5 mm
area B		0,8 mm

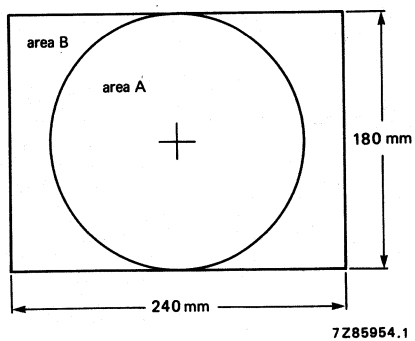

Fig. 22 Convergence test areas.

Raster centring

horizontal	max.	4	mm
vertical	max.	4	mm

Raster rotation max. 0,4°

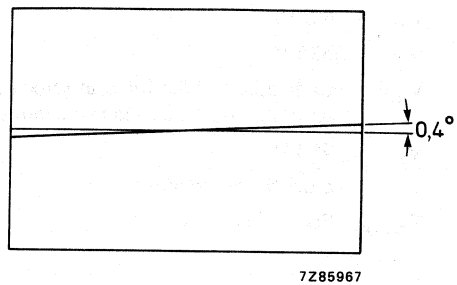

Fig. 23 Raster rotation.

Pattern distortion, measured without east-west and north-south correction

east-west	H	max.	3,0	mm
north-south	V	max.	2,1	mm

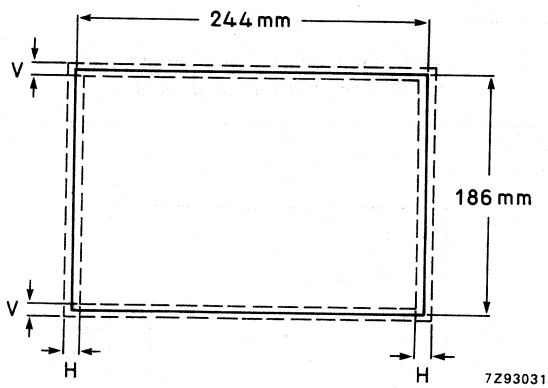

Fig. 24 Pattern distortion.

SUPERSEDES DATA OF FEBRUARY 1987

HIGH RESOLUTION COLOUR DISPLAY TUBE ASSEMBLIES

- 90° deflection angle
- 37 cm (14 in) face diagonal
- 29,1 mm neck diameter
- High resolution obtained by 0,29 mm dot triplet pitch and high-resolution in-line electron guns
- Hexagonal dot arrangement
- Black matrix screen for high brightness and contrast
- Internal magneto-static beam alignment
- Soft-Flash technology offering improved monitor reliability
- Internal magnetic shield
- Rimband type implosion protection
- Supplied as a pre-aligned, self-converging tube-coil assembly; dynamic convergence is not required

QUICK REFERENCE DATA

Deflection angle	90°
Face diagonal	37 cm (14 in)
Overall length	354 mm
Neck diameter	29,1 mm
Dot triplet pitch	0,29 mm (0,011 in)
Resolution: minimum number of resolvable pixels* at 200 μA; mod. depth −9 dB	790 x 570
Heating	6,3 V/673 mA
Focusing voltage	26% of anode voltage

Available versions

M37-. . . . / . / . / . . . .

Light transmission at screen centre:
103 X = 86%
108 X = 57%
118 X = 46%

deflection unit, see Table 1

SW (no indication for P22)

screen surface treatment;
N = direct etch
(no indication for high gloss)

* Pixel = picture element.

ELECTRON–OPTICAL DATA

Electron gun system	unitized in-line
Focusing method	electrostatic
Focus lens	bi-potential
Convergence method	magnetic
Deflection method	magnetic
Deflection angles	
diagonal	approx. 90°
horizontal	approx. 78°
vertical	approx. 60°

ELECTRICAL DATA

Tube

Capacitances		
anode to external conductive coating including rimband	$C_{a(m+m')}$	max. 1300 pF min. 800 pF
grid 1 of any gun to all other electrodes	C_{g1}	24 pF
cathodes of all guns, connected in parallel, to all other electrodes	C_k	15 pF
cathode of any gun to all other electrodes	C_{kR}, C_{kG}, C_{kB}	5 pF
focusing electrode to all other electrodes	C_{g3}	6 pF
Heating		indirect by AC or DC
heater voltage	V_f	6,3 V
heater current	I_f	673 mA

Table 1 Deflection unit data

parameter	unit	M37-. . . . / . / . / followed by				
		1120	1130	1131*	1140	1150*
Line deflection coils, Fig. 1						
inductance	mH ± 4%	1,2	0,64	0,64	0,31	0,15
resistance	Ω ± 10%	1,5	0,8	0,8	0,4	0,2
Line deflection current, edge to edge, at 25 kV	A (p-p)	3,62	5,12	5,12	7,24	10,24
Field deflection coils, Fig. 2						
inductance	mH ± 10%	6,5	6,5	13,1	6,5	6,5
resistance	Ω ± 7%	5,7	5,7	11,5	5,7	5,7
Field deflection current, edge to edge, at 25 kV	A (p-p)	1,36	1,36	0,96	1,36	1,36

* Under development.

Maximum permissible voltage	
between line and field coils	3000 V (DC)
between field coils and core	300 V (DC)
Insulation resistance	
between line and field coils, at 1 kV (DC)	500 MΩ
between line coil and core clamping ring, at 500 V (DC)	30 MΩ
between field coil and core clamping ring, at 1000 V (DC)	100 MΩ
Cross-talk	a voltage of 1 V, 15625 Hz applied to the line coils causes no more than 20 mV across the field coils

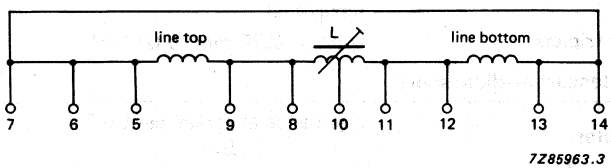

Fig. 1 Line coils.
L is factory adjusted.

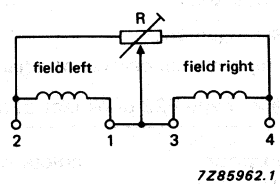

Fig. 2 Field coils.
R is factory adjusted.

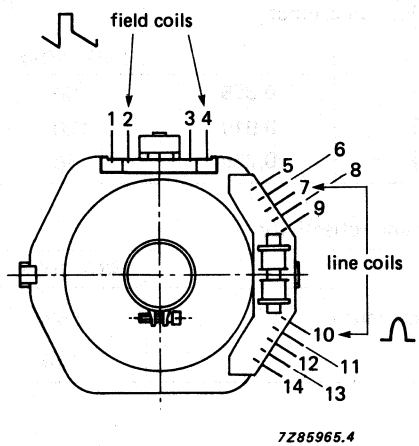

Fig. 3 Terminal location of deflection coils.

OPTICAL DATA

Screen	metal-backed phosphor dot triplets; black matrix
Screen finish	non-glare (direct etch) or high gloss
Usefull screen dimensions	
diagonal	min. 335,4 mm
horizontal axis	min. 280,8 mm
vertical axis	min. 210,6 mm
area	min. 580 cm^2
Recommended useful screen dimensions for alphanumeric display	
diagonal	307 mm
horizontal axis	240 mm
vertical axis	180 mm
Dot arrangement	hexagonal
Spacing between centres of adjacent dot triplets	approx. 0,29 mm (0,011 in)

Table 2 Type P22 phosphor data; persistence = medium short

phosphor colour	colour co-ordinates x	y	luminance at screen centre * cd/m^2 M37–103X	M37–108X	M37–118X
red **	0,640	0,335	47	32	26
green	0,315	0,590	184	126	103
blue **	0,150	0,060	25	17	14

Table 3 Type SW phosphor data; persistence = medium

phosphor colour	colour co-ordinates x	y	luminance at screen centre * cd/m^2 M37–103X	M37–108X	M37–118X
red	0,605	0,355	50	34	28
green	0,275	0,610	170	116	95
blue	0,235	0,255	68	47	38

Table 4 Light transmission and reflectivity

tube parameters	M37–103X	M37–108X	M37–118X
light transmission at screen centre	86%	57%	46%
reflectivity	19%	8%	5,5%

* Measuring conditions: I_{ap} per gun = 200 μA, scan duty cycle = 75%; scanned area = 240 mm x 180 mm.
** Pigmented phosphors.

Resolution

see Table below; values shown are measured under following conditions:
V_a = 25 kV, V_k = 100 V, V_{g3} adjusted for minimum width of vertical white lines at half east or half west zone; sine-wave drive voltage; horizontal raster scan of H x V = 240 mm x 180 mm

Table 5 Resolution

modulation depth	min. number of resolvable picture elements (n.H x n.V)		
	I_a = 100 μA per gun	I_a = 200 μA per gun	I_{ap} = 400 μA per gun
−6 dB	830 x 560	700 x 510	490 x 400
−9 dB	950 x 620	790 x 570	530 x 440
−12 dB	980 x 670	870 x 610	600 x 470
−20 dB	980 x 780	980 x 690	690 x 520

Notes

- The resolution figures in the Table are worst-case values in the display area, and include losses of modulation depth due to deflection defocusing and screen texture; the resolution at the screen centre is in general higher.
- Limitations due to moiré effects are not taken into account; the maximum resolution imposed by the Shannon limit of the phosphor screen = n.H x n.V = 980 x 1150 (signal dot rate equals phosphor dot rate).

MECHANICAL DATA (see also the figures on the following pages)

Overall length	353,7 ± 5 mm
Neck diameter	29,1 mm
Greatest dimensions of tube face (excluding mounting lugs)	
diagonal	366,4 ± 1,6 mm
width	315,4 ± 1,6 mm
height	246,4 ± 1,6 mm
Implosion protection	rimband (UL, CSA and VDE approved)
Anode contact designation	JEDEC J1-21; IEC 67-III-2
Base designation	10-pin base JEDEC B10-277
Basing designation	see Fig. 10
Mass	approx. 6,4 kg
Mounting position	anode contact on top

MECHANICAL DATA

Dimensions in mm

Notes are given after the drawings.

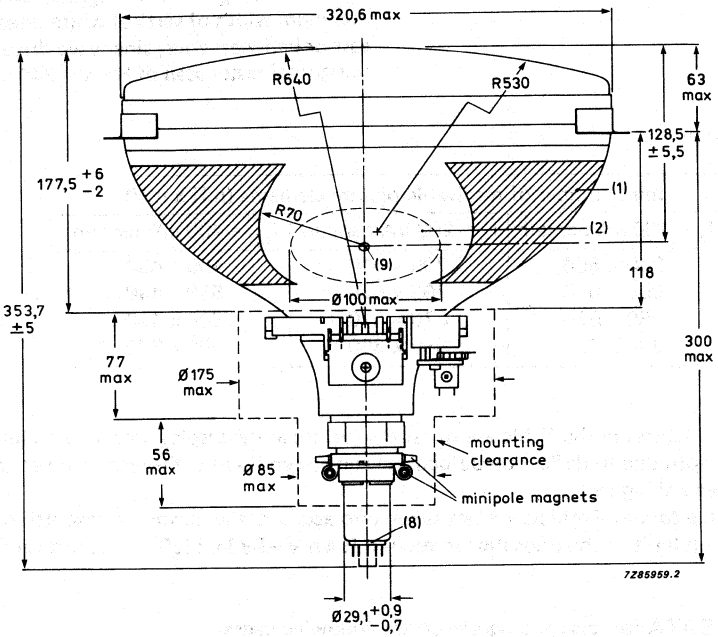

Fig. 4a.

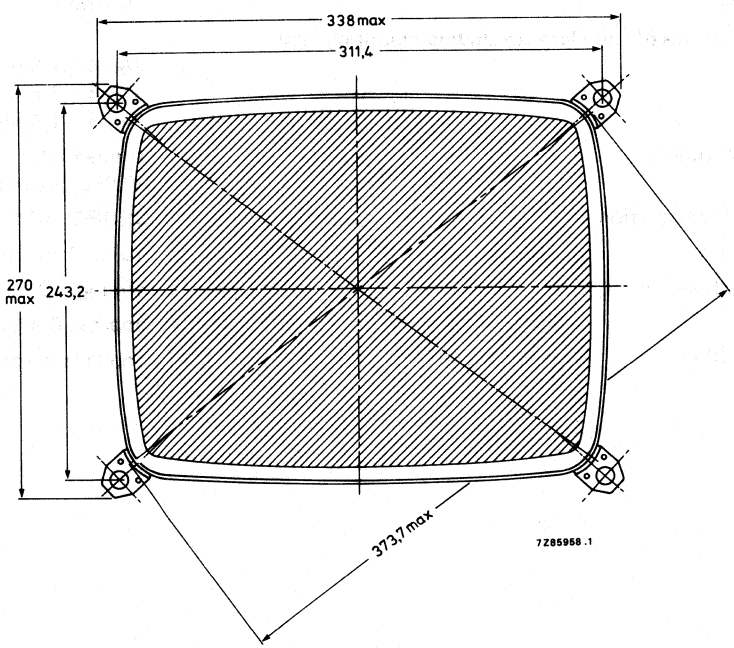

Fig. 4b.

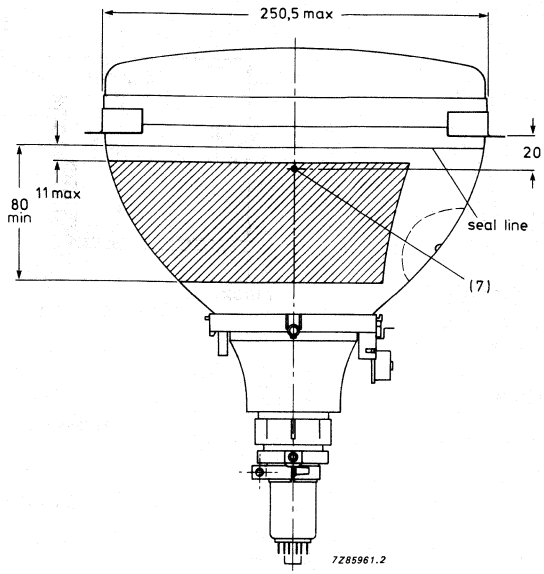
250,5 max
20
11 max
80
min
seal line
(7)
7Z85961.2

Fig. 4c.

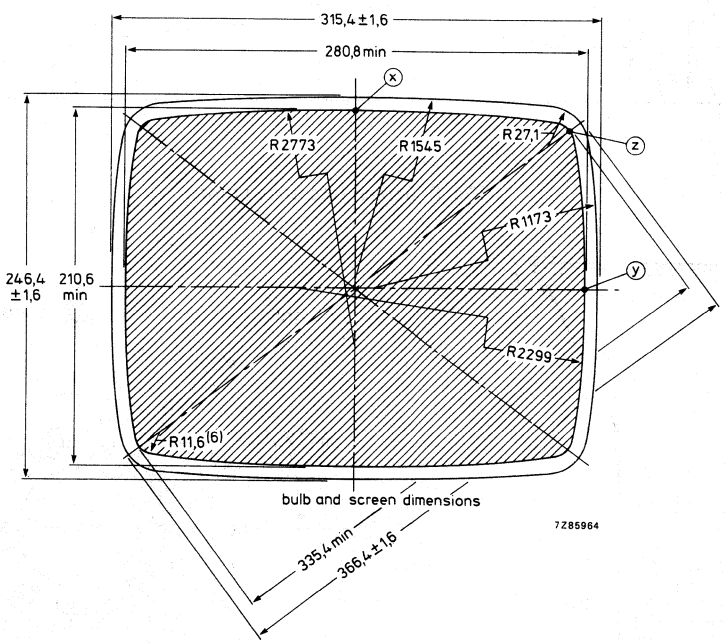
315,4±1,6
280,8 min
x
R2773
R1545
R27,1
z
R1173
y
246,4
±1,6
210,6
min
R2299
R11,6 (6)
bulb and screen dimensions
7Z85964
335,4 min
366,4±1,6

Fig. 5.

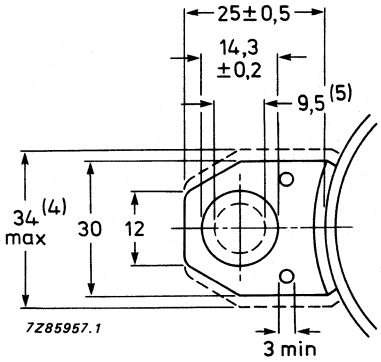

Fig. 6 Lug dimensions.

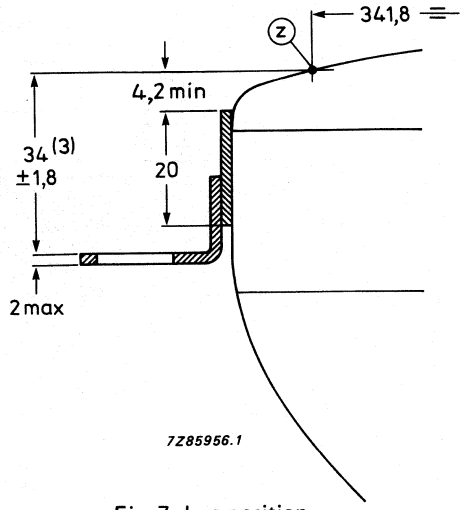

Fig. 7 Lug position.

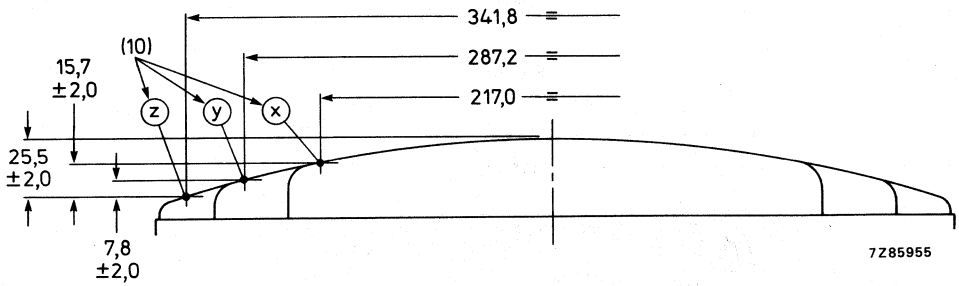

Fig. 8 Screen reference points.

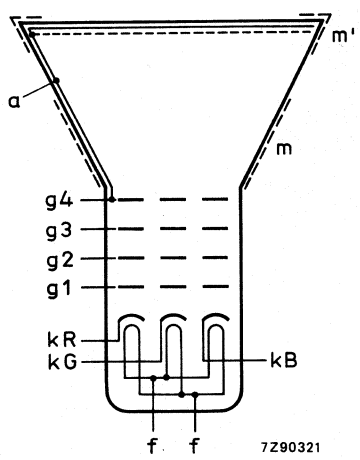

Fig. 9 Electrode configuration.

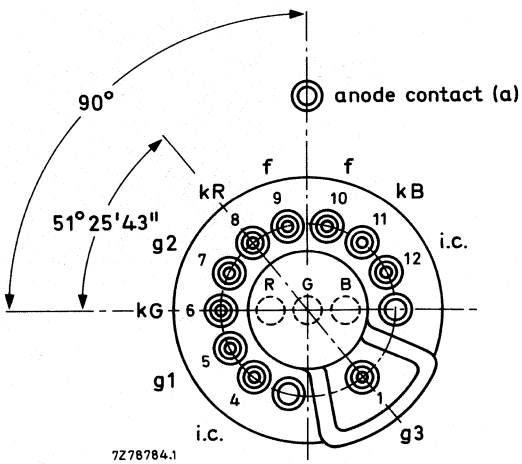

Fig. 10 Pin arrangement.

i.c. = internally connected (not to be used)

Notes to outline drawings

1. Configuration of outer conductive coating may be different, but will contain the contact area as shown in the drawing.
2. To clean this area, wipe only with a soft lintless cloth.
3. The displacement of any lug with respect to the plane through the three other lugs is max. 1 mm.
4. Minimum space to be reserved for mounting lug.
5. The position of the mounting screw in the cabinet must be within a circle of 9,5 mm diameter drawn around the true geometrical positions, i.e. the corners of a rectangle of 311,4 mm x 243,2 mm.
6. Co-ordinates for radius R = 11,6 mm: x = 126,98 mm, y = 90,76 mm.
7. Centre of gravity.
8. The socket for this base should not be rigidly mounted; it should have flexible leads and be allowed to move freely. After mounting of the tube in the cabinet note that the position of the base can fall within a circle, having a diameter of max. 50 mm, concentric with an imaginary tube axis. The mass of the mating socket with circuitry should not be more than 150 g; maximum permissible torque is 40 mNm.
9. Small cavity contact J1-21, IEC 67-III-2.
10. The X, Y and Z reference points are located on the outside surface of the face plate 3,2 mm beyond the intersection of the minor, major and diagonal screen axis respectively, with the minimum published screen.

10-pin base; JEDEC B10-277

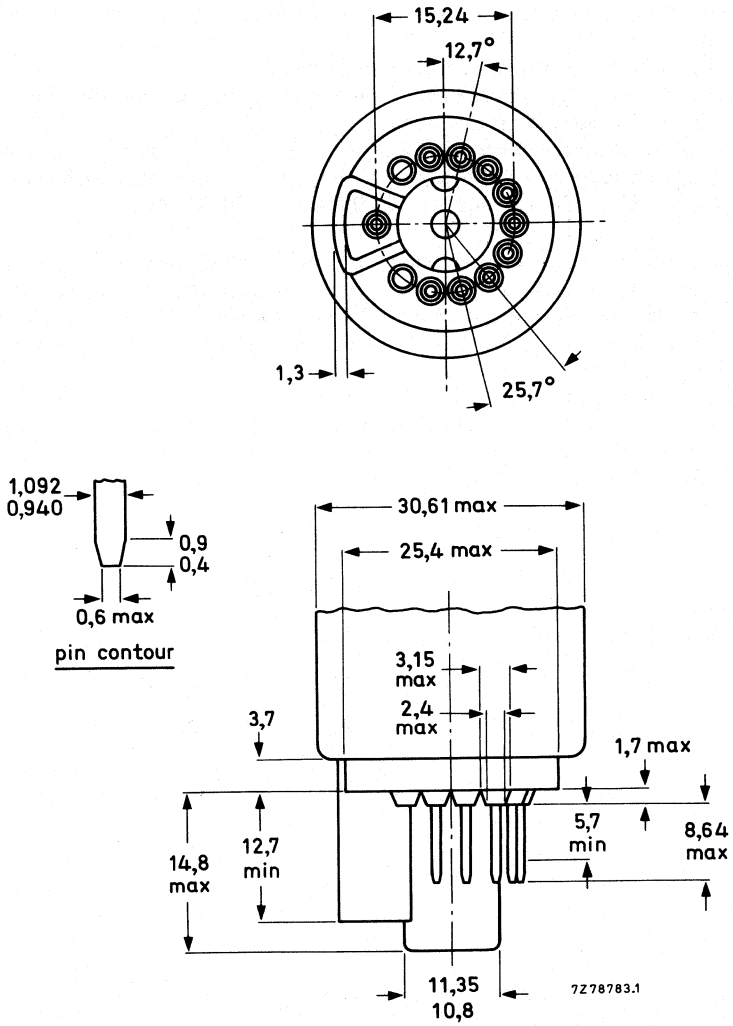

Fig. 11 JEDEC base.

Maximum cone contour

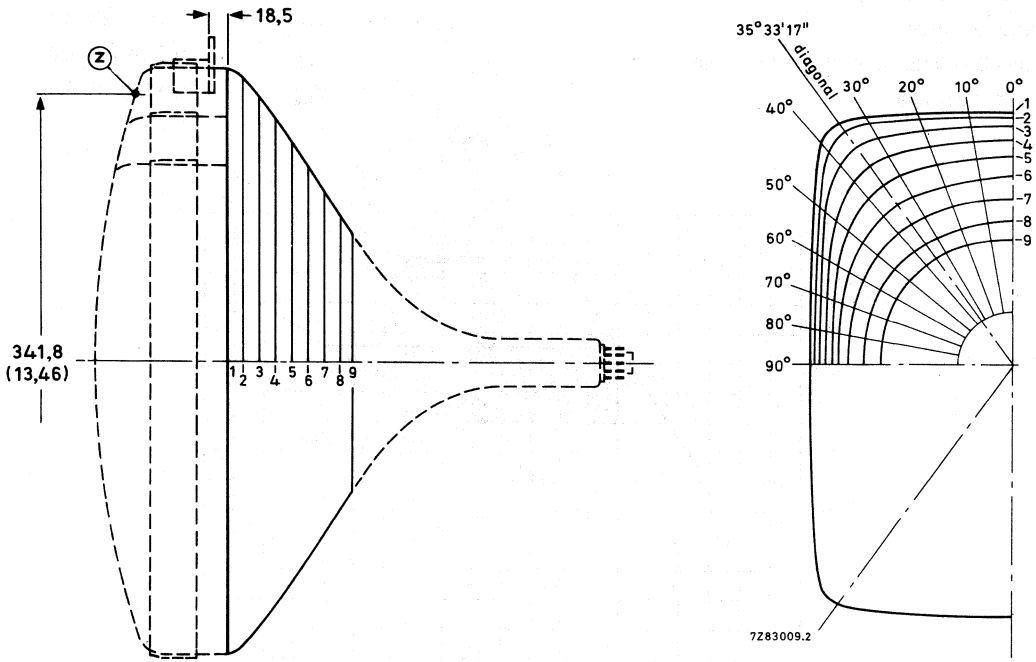

Fig. 12 Cone contour.

Table 6 Cone contour data

Dimensions in mm

section	nom. distance from section 1	distance from centre (max. values)														
		0°	10°	20°	25°	30°	32° 30'	diag. axes	37° 30'	40°	45°	50°	60°	70°	80°	90°
1	0	157,2	159,4	166,3	171,7	178,2	181,2	183,6	183,3	180,0	167,9	156,5	140,0	129,8	124,2	122,4
2	10	154,7	156,9	163,5	168,5	174,1	176,6	178,1	177,7	174,8	164,4	153,7	137,8	127,9	122,4	120,7
3	20	148,8	150,7	156,3	160,0	163,5	164,6	165,0	164,4	162,6	156,0	147,7	133,6	124,4	119,3	117,7
4	30	140,4	142,1	146,2	148,6	150,5	151,0	151,1	150,7	149,6	145,6	140,0	128,6	120,3	115,7	114,2
5	40	130,3	131,3	134,0	135,4	136,5	136,8	136,8	136,6	136,1	134,1	130,8	122,7	115,9	111,7	110,3
6	50	118,2	118,8	120,1	120,9	121,6	121,8	122,0	122,0	121,9	121,2	119,8	115,4	110,5	107,0	105,8
7	60	104,9	104,7	105,1	105,5	106,0	106,2	106,5	106,7	106,9	107,1	107,0	105,6	103,1	100,8	99,8
8	70	90,6	89,9	89,8	90,0	90,4	90,6	90,9	91,1	91,4	91,9	92,3	92,5	91,7	90,4	89,7
9	77	79,9	79,1	79,0	79,1	79,4	79,6	79,9	80,1	80,4	80,9	81,4	81,8	81,4	80,5	79,9

RECOMMENDED OPERATING CONDITIONS (cathode drive)

The voltages are specified with respect to grid 1.

Anode voltage	$V_{a,g4}$	25 kV
Grid 3 (focusing electrode) voltage	V_{g3}	6,2 to 7,0 kV
Grid 2 voltage	V_{g2}	see Fig. 13

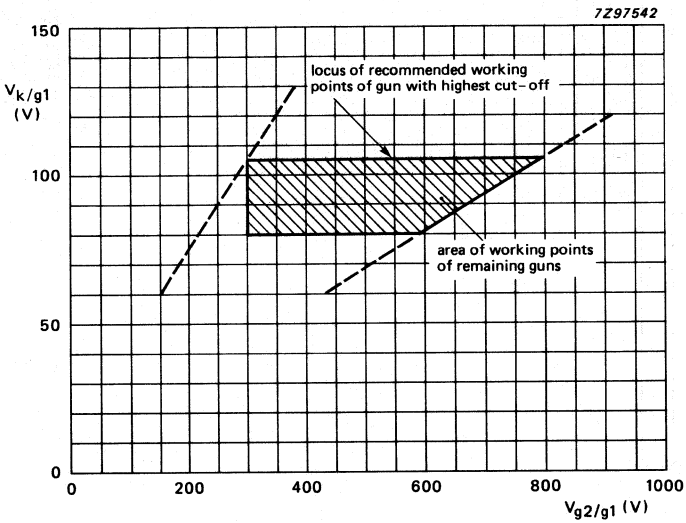

Fig. 13 Spot cut-off design chart.

Grid 2 voltage (V_{g2}) adjusted for highest gun spot cut-off voltage V_k = 105 V.

Remaining guns adjusted for spot cut-off by means of cathode voltage.

V_{g2} range 300 to 800 V

V_k range 80 to 105 V

Adjustment procedure:

Set the cathode voltage (V_k) for each gun at 105 V; increase the grid 2 voltage (V_{g2}) from approx. 300 V to the value at which one of the colours becomes just visible. Now decrease the cathode voltage of the remaining guns so that the other colours also become visible.

EQUIPMENT DESIGN VALUES (each gun if applicable)

The values are valid for anode voltages between 20 and 27,5 kV.
The voltages are specified with respect to grid 1.

Grid 3 (focusing electrode) voltage	V_{g3}	24,8 to 28% of anode voltage
Grid 2 voltage for visual extinction of focused spot (V_k = max. 105 V)	V_{g2} and V_k	see Fig. 13
Difference in cut-off voltages between guns in any tube	ΔV_k	lowest value ⩾ 80% of highest value
Cathode drive characteristic		see Fig. 14
Grid 3 (focusing electrode) current	I_{g3}	−5 to + 5 μA
Grid 2 current	I_{g2}	−5 to + 5 μA
Grid 1 current at V_k = 100 V	I_{g1}	−5 to + 5 μA

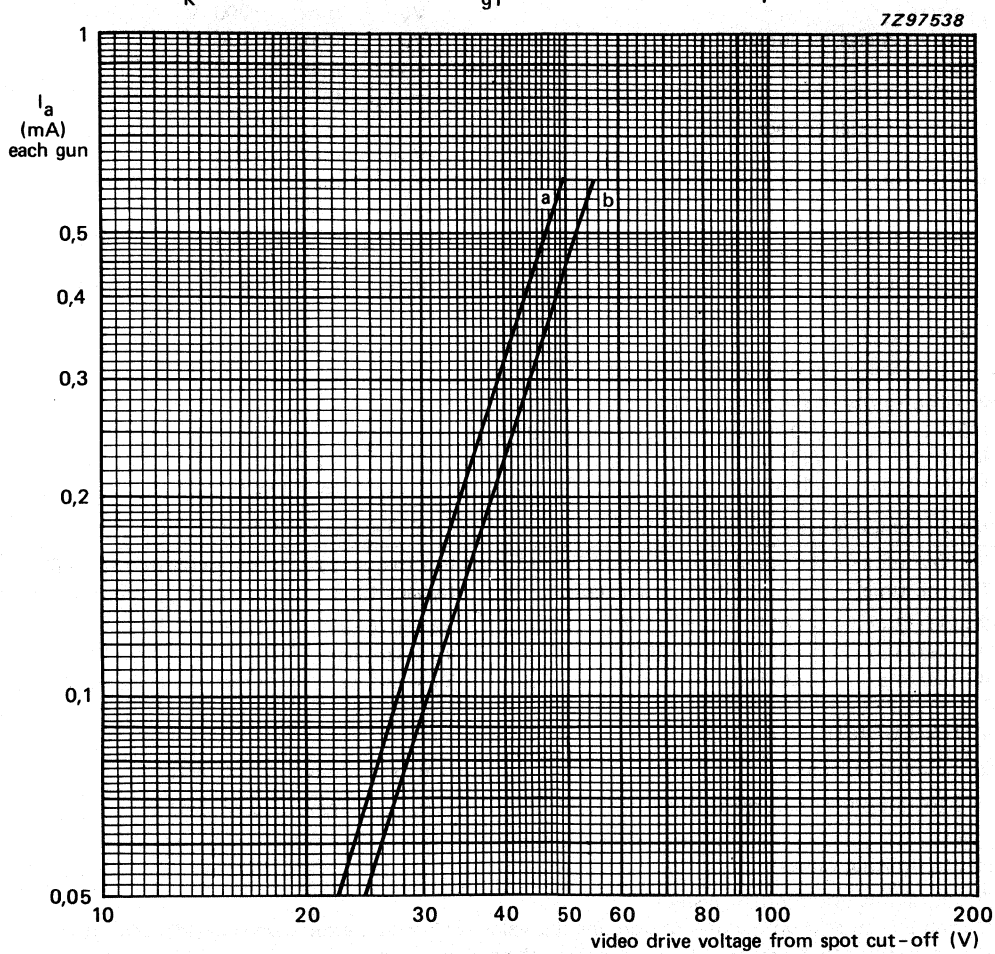

Fig. 14 Typical cathode drive characteristics at spot cut-off voltages of 80 V (curve a) and 105 V (curve b).
V_f = 6,3 V; $V_{a,g4}$ = 25 kV; V_{g3} adjusted for focus; V_{g2} adjusted to provide spot cut-off for desired V_k.

LIMITING VALUES (each gun if applicable)

Tube

Design maximum rating system unless otherwise stated.
The voltages are specified with respect to grid 1.

Anode voltage	$V_{a,g4}$	max.	27,5 kV	notes 1 and 2
		min.	20 kV	note 3
Anode current for each gun, peak value	I_{ap}	max.	400 μA	
Long term average anode current for each gun	I_a	max.	200 μA	
Long term average anode current for three guns	I_a	max.	450 μA	
Grid 3 (focusing electrode) voltage	V_{g3}	max.	10 kV	
Grid 2 voltage, peak	V_{g2p}	max.	1000 V	
Cathode voltage				
positive	V_k	max.	200 V	
positive operating cut-off	V_k	max.	130 V	
negative	$-V_k$	max.	0 V	
negative peak	$-V_{kp}$	max.	2 V	
Cathode to heater voltage				
positive	V_{kf}	max.	150 V	
positive peak	V_{kfp}	max.	200 V	note 1
negative	$-V_{kf}$	max.	0 V	
negative peak	$-V_{kfp}$	max.	100 V	note 1
Heater voltage	V_f	6,3 V	+ 5% −10%	note 4

Deflection unit

Maximum operating copper temperature 95 °C

Temperature rise of the coils (ΔT)

M37-. . . . / . / . /1120, M37-. . . . / . / . /1130 and M37-. . . . / . / . /1140 — see Table 7

M37-. . . . / . / . /1150 — see Table 8

Table 7 Temperature data see note 5.

line frequency/ flyback time	temperature rise (ΔT)	
	line coils	frame coils
24 kHz/8 μs	20 °C	15 °C
32 kHz/6 μs	25 °C	20 °C
48 kHz/4 μs	35 °C	30 °C

Table 8 Temperature data see note 5.

line frequency/ flyback time	temperature rise (ΔT)	
	line coils	frame coils
32 kHz/6 μs	17 °C	17 °C
48 kHz/4 μs	23 °C	23 °C
64 kHz/3 μs	32 °C	32 °C

LIMITING CIRCUIT VALUES

Grid 3 circuit resistance	R_{g3}	max.	30 MΩ
Grid 1 to cathode circuit resistance (each gun)	R_{g1k}	max.	0,75 MΩ

Notes to limiting values

1. Absolute Maximum rating system.
2. During adjustment on the production line this value is likely to be surpassed considerably. It is therefore strongly recommended first to make the necessary adjustments for normal operation.
3. Operation of the tube at lower voltages impairs the luminance and resolution.
4. For maximum cathode life, it is recommended that the heater supply be regulated at 6,0 V.
5. Measured using resistance method.

FLASHOVER PROTECTION

With the high voltage used with this tube (max. 27,5 kV) internal flashovers may occur. As a result of the Soft-Flash technology these flashover currents are limited to approx. 60 A offering higher set reliability, optimum circuit protection and component savings.
Primary protective circuitry using properly grounded spark gaps and series isolation resistors (preferably carbon composition) is still necessary to prevent tube damage. The spark gaps should be connected to all picture tube electrodes at the socket according to the figure below; they are not required on the heater pins. No other connections between the outer conductive coating and the chassis are permissible.
The spark gaps should be designed for a breakdown voltage at the focusing electrode (g3) of 11 kV ($1{,}5 \times V_{g3}$ max. at $V_{a,g4} = 25$ kV), and at the other electrodes of 1,5 to 2 kV.
The values of the series isolation resistors should be as high as possible (min. 0,5 kΩ) without causing deterioration of the circuit performance. The resistors should be able to withstand an instantaneous surge of 20 kV for the focusing circuit and 12 kV for the remaining circuits without arcing.
Additional information is available on request.

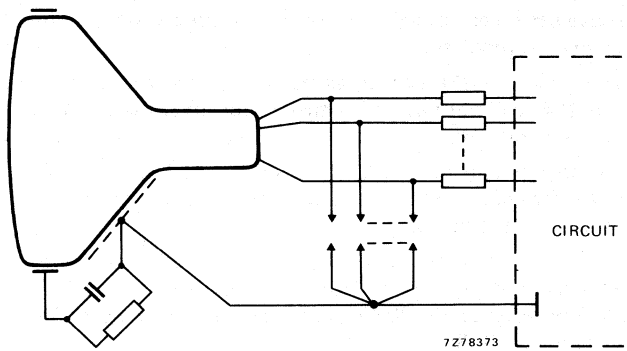

Fig. 15 Flashover protection circuit.

X-RADIATION LIMIT

Maximum anode voltage at which the X-radiation emitted will not exceed 0,5 mR/h at an anode current of 300 μA

entire tube	31 kV*
face-plate only	33 kV

Warning:

If the value for the tube face only is used as design criterion, adequate shielding must be provided in the monitor for the anode contact and/or certain portions of the tube funnel and panel sidewalls to insure that the X-radiation from the monitor is attenuated to a value equal to or lower than that specified for the face of the tube.

Maximum voltage difference between anode and focus electrode at which the X-radiation will not exceed 0,5 mR/h 30 kV

Warning:

If the voltage value above can be exceeded in the monitor additional attenuation of the X-radiation through the tube neck may be required.

The X-radiation emitted from this display tube, as measured in accordance with the procedure of TEPAC Publication No. 194, will not exceed 0,5 mR/h throughout the useful tube life when operated within the 'Design maximum ratings'.

The tube should not be operated beyond its 'Design maximum ratings' stated above, but its X-radiation will not exceed 0,5 mR/h for anode voltage and current combinations given by the isoexposure-rate limits characteristics shown on the next page.

Operation above the values shown by the curve may result in failure of the monitor to comply with the Federal Performance Standard of the U.S. for Television Receivers, Section 1020. 10 of Part 1020 of Title 21, Code of Federal Regulation (PL90-602) as published in the Federal Register Volume 38, No. 198, Monday, October 15, 1973.

Maximum X-radiation as a function of anode voltage at 300 μA anode current is shown by the curve on the next page. X-radiation at a constant anode voltage varies linearly with anode current.

* This rating applies only if the anode connector used by the set maker provides the necessary attenuation to reduce the X-radiation from the anode contact by a factor equal to the difference between the anode button isoexposure-rate limit curve and the isoexposure-rate limit curve for the entire tube.

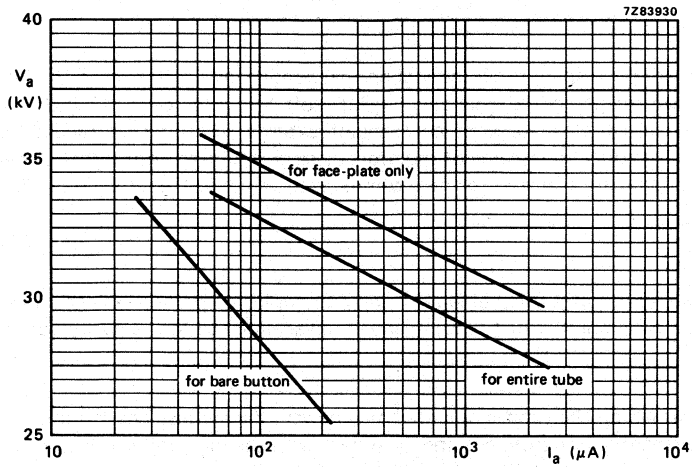

Fig. 16 0,5 mR/h isoexposure-rate limit curve.

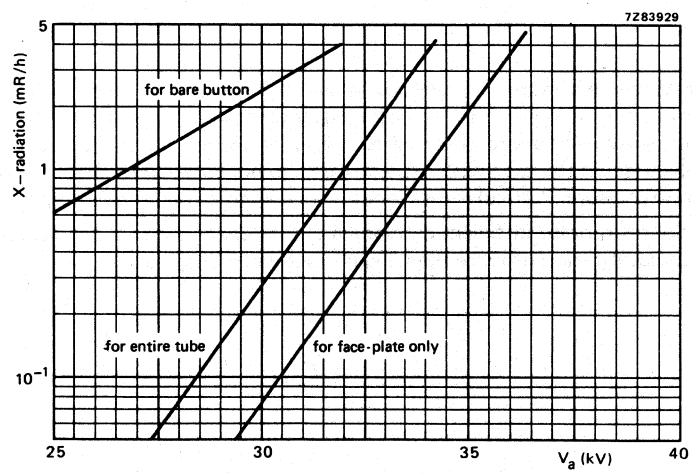

Fig. 17 X-radiation limit curve at a constant anode current of 300 μA.

WARNINGS

X-radiation

Operation of this colour display tube under abnormal conditions which exceed the 0,5 mR/h iso-dose rate curve shown on the preceding page may produce soft X-rays which may constitute a health hazard on prolonged exposure at close range unless adequate external screening is provided. Precautions must therefore be exercised during servicing of monitors using this tube to ensure that the anode voltage and other tube voltages are adjusted to the recommended values so that the 'Design maximum ratings' are not exceeded.

Tube replacement

This display tube incorporates integral X-radiation and implosion protection and must be replaced with a tube of the same type number or a recommended replacement to assure continued safety.

Shock hazard

The high voltage at which the tube is operated may be very dangerous. The monitor should include safeguards to prevent the user from coming in contact with the high voltage. Extreme care should be taken in servicing or adjustment of any high-voltage circuit.

Caution must be exercised during the replacement or servicing of the display tube since a residual electrical charge may be held by the high-voltage capacitor formed by the external and internal conductive coatings of the display tube funnel. To remove any residual charge, short the anode contact button, located in the funnel of the tube, to the external conductive coating before handling the tube. Discharging the high voltage to isolated metal parts such as cabinets and control brackets may produce a shock hazard.

Tube handling

Display tubes should be kept in the shipping box or similar protective container will just prior to installation. Wear heavy protective clothing, including gloves and safety goggles with side shields, in areas containing unpacked and unprotected tubes to prevent possible injury from flying glass in the event a tube breaks. Handle the tube with extreme care. Do not strike, scratch or subject the tube to more than moderate pressure. Particular care should be taken to prevent damage to the seal area.

The packing should incorporate sufficient cushioning so that under normal conditions of shipment or handling an impact acceleration of more than 35g is never applied to the tube.

LUMINANCE: P22 phosphor

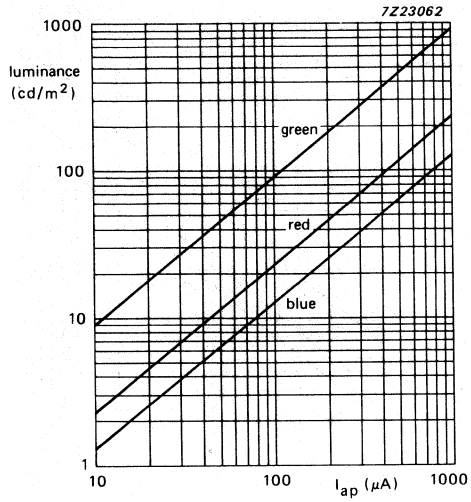

Fig. 18.

M37-103X
Luminance at the centre of the screen as a function of I_{total}.
$V_{a,g4}$ = 25 kV; V_f = 6,3 V; V_{g3} adjusted for optimum focus.
Raster size = 240 x 180 mm².

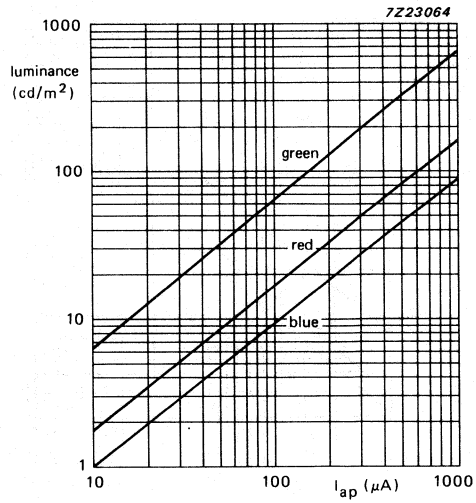

Fig. 19.

M37-108X
Luminance at the centre of the screen as a function of I_{total}.
$V_{a,g4}$ = 25 kV; V_f = 6,3 V; V_{g3} adjusted for optimum focus.
Raster size = 240 x 180 mm².

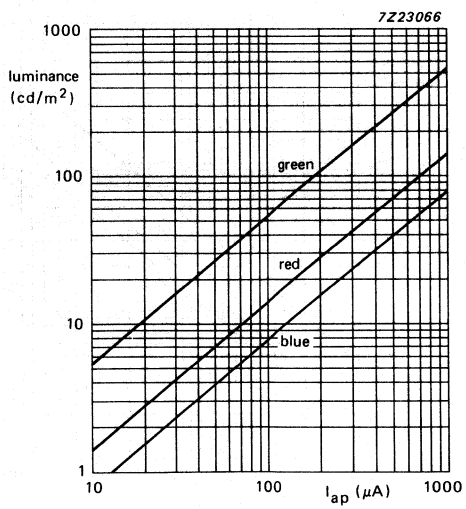

Fig. 20.

M37-118X
Luminance at the centre of the screen as a function of I_{total}.
$V_{a,g4}$ = 25 kV; V_f = 6,3 V; V_{g3} adjusted for optimum focus.
Raster size = 240 x 180 mm².

LUMINANCE; SW phosphor

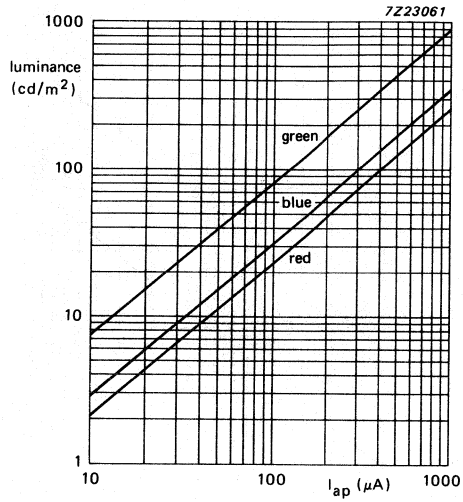

Fig. 21.

M37-103X
Luminance at the centre of the screen as a function of I_{total}.
$V_{a,g4}$ = 25 kV; V_f = 6,3 V; V_{g3} adjusted for optimum focus.
Raster size = 240 x 180 mm².

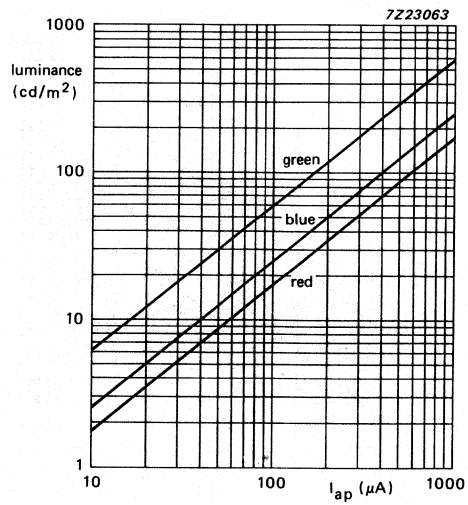

Fig. 22.

M37-108X
Luminance at the centre of the screen as a function of I_{total}.
$V_{a,g4}$ = 25 kV; V_f = 6,3 V; V_{g3} adjusted for optimum focus.
Raster size = 240 x 180 mm².

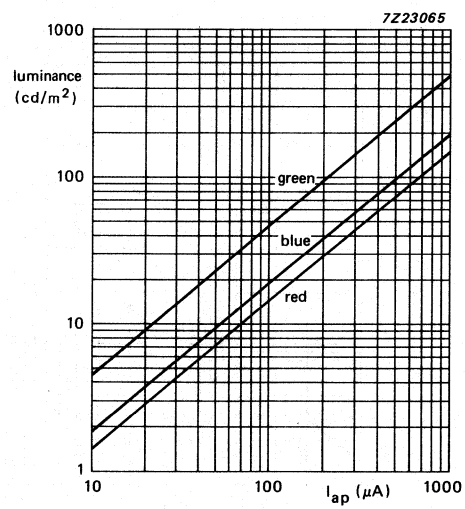

Fig. 23.

M37-118X
Luminance at the centre of the screen as a function of I_{total}.
$V_{a,g4}$ = 25 kV; V_f = 6,3 V; V_{g3} adjusted for optimum focus.
Raster size = 240 x 180 mm².

DEGAUSSING

The display tube has an internal magnetic shield. This shield and the shadow mask with its suspension system may be automatically degaussed by a coil mounted on the cone of the display tube as shown in Fig. 24.

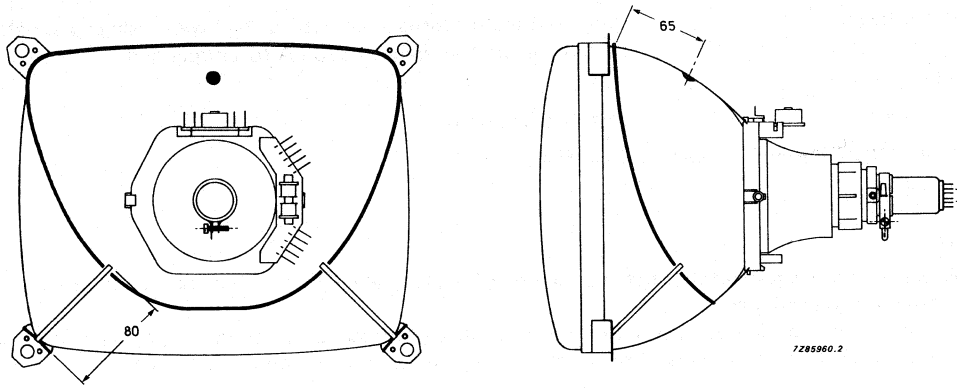

Fig. 24 Position of degaussing coil on the display tube; dimensions are given in mm.

For proper degaussing an initial magnetomotive force (MMF) of 600 ampere-turns is required in the coil. This MMF has to be gradually decreased. In the steady state, no significant MMF should remain in the coil ($\leqslant$ 0,6 ampere-turns).

If single-phase power rectification is used, provision should be included to prevent asymmetric distortion of the AC voltage applied to the degaussing circuit due to high DC inrush currents.

An example of a degaussing circuit and coil data for various mains voltage are given below.

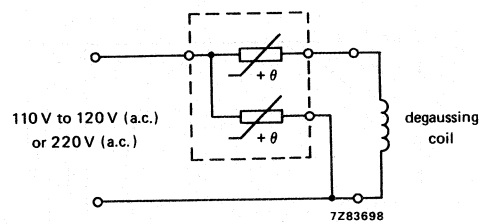

Fig. 25 Degaussing circuit using dual PTC thermistor.

Data of degaussing coil

	110 to 120 V (AC)	220 V (AC)
Circumference	90 cm	90 cm
Number of turns	70	120
Copper-wire diameter	0,45 mm	0,3 mm
Resistance	6,7 Ω	25,9 Ω
Catalogue number of dual PTC thermistor	8222 298 73091	2322 662 98009

CONVERGENCE AND RASTER SPECIFICATION

The maximum misconvergence after 20 min operation is given in Table 1 and Fig. 26.

Test conditions (all voltages are measured with respect to grid 1)

Heater voltage	V_f	6,3 V
Grid 2 voltage	V_{g2}	525 V
Grid 3 voltage	V_{g3}	to be adjusted for focus at half east or half west, using cross-hatch pattern, at anode current of 350 μA (peak) per gun
Anode voltage	V_a	25 kV
Test pattern		cross-hatch pattern
Ambient temperature	T_{amb}	25 ± 5 °C
Tube facing		East

Notes

1. Misconvergence is the distance between centres of the red, green, blue lines at the screen using rectangular co-ordinates.
2. Anode and/or focusing voltage and terrestrial magnetism affects the static confergence performance. Therefore small readjustments of the minipole magnets (see Fig. 4a) may be necessary.

Table 1 Maximum misconvergence after 20 min operation

location (see Fig. 26)	type of error	max. error between any colour
centre	red-green-blue line separation in either the horizontal or vertical direction	0,15 mm
area A		0,30 mm
area B		0,40 mm

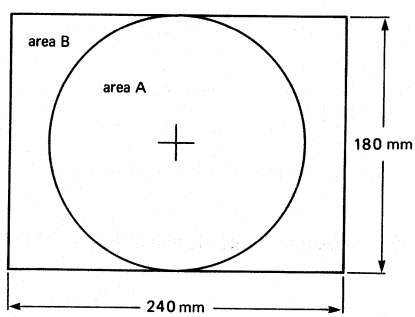

Raster centring

horizontal	max. 4 mm
vertical	max. 4 mm

Raster rotation max. 0,4° (Fig. 27)

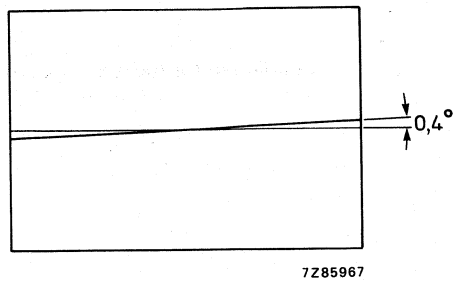

Fig. 27 Raster rotation.

Pattern distortion, measured without east-west and north-south correction

Pin cushion distortion		
east-west	$\frac{2(H1 + H2)}{B1 + B2}$ x 100% (Fig. 28)	max. 8,0%
north-south	$\frac{2(V1 + V2)}{A1 + A2}$ x 100% (Fig. 28)	max. 1,0%
Max. pin-cushion distortion at each side		
east-west	H1 or H2 (Fig. 28)	max. 10 mm
north-south	V1 or V2 (Fig. 28)	max. 1,0 mm
Parallelogram	P1 or P2 (Fig. 29)	max. 2,5 mm

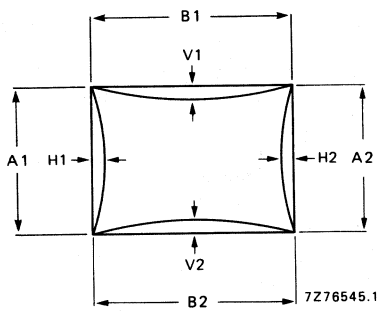

Fig. 28 A1, A2 = 180 mm; B1, B2 = 240 mm.

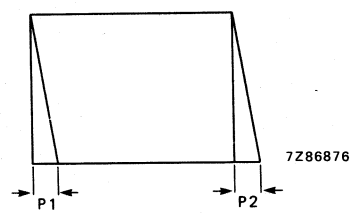

Fig. 29.

DATA HANDBOOK SYSTEM

DATA HANDBOOK SYSTEM

Our Data Handbook System comprises more than 70 books with specifications on electronic components, subassemblies and materials. It is made up of five series of handbooks:

PROFESSIONAL COMPONENTS*

SEMICONDUCTORS

INTEGRATED CIRCUITS

PASSIVE COMPONENTS AND MATERIALS**

DISPLAY COMPONENTS

The contents of each series are listed on pages iv to viii.

The data handbooks contain all pertinent data available at the time of publication, and each is revised and reissued periodically.

When ratings or specifications differ from those published in the preceding edition they are indicated with arrows in the page margin. Where application information is given it is advisory and does not form part of the product specification.

Condensed data on the preferred products of Philips Components is given in our Preferred Type Range catalogue (issued annually).

Information on current Data Handbooks and on how to obtain a subscription for future issues is available from any of the Organizations listed on the back cover.
Product specialists are at your service and enquiries will be answered promptly.

* Will replace the Electron tubes (blue) series of handbooks.
** Will replace the Components and materials (green) series of handbooks.

PROFESSIONAL COMPONENTS

This series of data handbooks comprises:

T1 **Power tubes for RF heating and communications**

T2a **Transmitting tubes for communications, glass types**

T2b **Transmitting tubes for communications, ceramic types**

T3 **Klystrons**

T4 **Magnetrons for microwave heating**

T5 **Cathode-ray tubes**
Instrument tubes, monitor and display tubes, C.R. tubes for special applications

T6 **Geiger-Müller tubes**

T8* **Colour display systems**
Colour TV picture tubes, colour data graphic display tube assemblies, deflection units

T9 **Photo and electron multipliers**

T10 **Plumbicon camera tubes and accessories**

T11 **Microwave semiconductors and components**

T12 **Vidicon and Newvicon camera tubes**

T13 **Image intensifiers and infrared detectors**

T15 **Dry reed switches**

T16** **Monochrome tubes and deflection units**
Black and white TV picture tubes, monochrome data graphic display tubes, deflection units

* Handbook T8 will be issued in a new series of handbooks (Display Components) and will have the new handbook code DC01.

** Handbook T16 will be re-issued in the future in the new series of handbooks (Display Components).

SEMICONDUCTORS

This series of data handbooks comprises:

S1 **Diodes**
Small-signal silicon diodes, voltage regulator diodes (< 1.5 W), voltage reference diodes, tuner diodes, rectifier diodes

S2a **Power diodes**

S2b **Thyristors and triacs**

S3 **Small-signal transistors**

S4a **Low-frequency power transistors and hybrid modules**

S4b **High-voltage and switching power transistors**

S5 **Small-signal field-effect transistors**

S6 **R.F. power transistors and modules**

S7 **Surface mounted semiconductors**

S8a **Light-emitting diodes**

S8b **Devices for optoelectronics**
Optocouplers, photosensitive diodes and transistors, infrared light-emitting diodes and infrared sensitive devices, laser and fibre-optic components

S9 **PowerMos transistors**

S10 **Wideband transistors and wideband hybrid IC modules**

S11 **Microwave transistors**

S13 **Semiconductor sensors**

S14 **Liquid Crystal Displays**

INTEGRATED CIRCUITS

This series of handbooks comprises:

IC01	**Radio, audio and associated systems** Bipolar, MOS	
IC02a/b	**Video and associated systems** Bipolar, MOS	
IC03	**Integrated circuits for telephony** Bipolar, MOS	
IC04	**HE4000B logic family** CMOS	
IC05N	**HE4000B logic family – uncased ICs** CMOS	
IC06	**High-speed CMOS; PC74HC/HCT/HCU** Logic family	
IC08	**ECL 10K and 100K logic families**	
IC09N	**TTL logic series**	
IC10	**Memories** MOS, TTL, ECL	
IC11	**Linear Products**	
Supplement to IC11	**Linear Products**	
IC12	**I²C-bus compatible ICs**	
IC13	**Semi-custom** Programmable Logic Devices (PLD)	
IC14	**Microcontrollers and peripherals** Bipolar, MOS	
IC15	**FAST TTL logic series**	
IC16	**CMOS integrated circuits for clocks and watches**	
IC17	**Integrated Services Digital Networks (ISDN)**	not yet issued
IC18	**Microprocessors and peripherals**	
IC19	Data communication products	

PASSIVE COMPONENTS AND MATERIALS

This series of data handbooks comprises:

C2*	**Television tuners, coaxial aerial input assemblies**
C3*	**Loudspeakers**
C4	**Ferroxcube potcores, square cores and cross cores**
C5	**Ferroxcube for power, audio/video and accelerators**
C6	**Synchronous motors and gearboxes**
C7	**Variable capacitors**
C8	**Variable mains transformers**
C9	**Piezoelectric quartz devices**
C11	**Varistors, thermistors and sensors**
C12	**Potentiometers, encoders and switches**
C13	**Fixed resistors**
C14	**Electrolytic and solid capacitors**
C15	**Ceramic capacitors**
C16	**Permanent magnet materials**
C17	**Stepping motors and associated electronics**
C18	**Direct current motors**
C19	**Piezoelectric ceramics**
C20*	**Wire-wound components for TVs and monitors**
C22	**Film capacitors**

* These handbooks will be re-issued in the future in the new series of handbooks (Display Components).

DISPLAY COMPONENTS

This series of handbooks comprises:

DC01	**Colour display systems**
DC02*	**Monochrome tubes and deflection units**
DC03*	**Television tuners, coaxial aerial input assemblies**
DC04*	**Loudspeakers**
DC05*	**Wire-wound components for TVs and monitors**

* Not yet issued in the Display Components series of handbooks.

Philips Components – a worldwide Group of Companies

Argentina: PHILIPS ARGENTINA S.A., Div. Components, Vedia 3892, 1430 BUENOS AIRES, Tel. (01) 541 - 7141 to 7747.
Australia: PHILIPS INDUSTRIES LTD., Components Division, 11 Waltham Street, ARTARMON, N.S.W. 2064, Tel. (02) 439 3322.
Austria: ÖSTERREICHISCHE PHILIPS INDUSTRIE G.m.b.H., UB Bauelemente, Triester Str. 64, 1101 WIEN, Tel. (0222) 60 101-820.
Belgium: N.V. PHILIPS PROF. SYSTEMS – Elcoma Div., 80 Rue Des Deux Gares, B-1070 BRUXELLES, Tel. (02) 52 56 111.
Brazil: CONSTANTA-IBRAPE; (Active Devices): Av. Brigadeiro Faria Lima, 1735-SAO PAULO-SP, Tel. (011) 211-2600. CONSTANTA-IBRAPE; (Passive Devices & Materials): Av. Francisco Monteiro, 702 – RIBEIRAO PIRES-SP, Tel. (011) 459-8211.
Canada: PHILIPS ELECTRONICS LTD., Philips Components, 601 Milner Ave., SCARBOROUGH, Ontario, M1B 1M8, Tel. (416) 292-5161.
Chile: PHILIPS CHILENA S.A., Av. Santa Maria 0760, SANTIAGO, Tel. (02) 77 38 16.
Colombia: IND. PHILIPS DE COLOMBIA S.A., c/o IPRELENSO LTD., Cra. 21, No. 56-17, BOGOTA, D.E., Tel. (01) 2 49 76 24.
Denmark: MINIWATT A/S, Strandlodsvej 2, P.O. Box 1919, DK 2300 COPENHAGEN S, Tel. (01) 54 11 33.
Finland: PHILIPS COMPONENTS, Sinikalliontie 3, SF-02631 ESPOO HELSINKI 10, Tel. 09 +358-0-50 261.
France: RTC-COMPELEC, 117 Quai du Président Roosevelt, 92134 ISSY-LES-MOULINEAUX Cedex, Tel. (01) 40 93 80 00.
Germany (Fed. Republic): VALVO, UB Bauelemente der Philips G.m.b.H., Valvo Haus, Burchardstrasse 19, D-2 HAMBURG 1, Tel. (040) 3296-0.
Greece: PHILIPS HELLENIQUE S.A., Elcoma Division, No. 15, 25th March Street, GR 17778 TAVROS, Tel. (01) 48 94 339/48 94 911.
Hong Kong: PHILIPS HONG KONG LTD., Elcoma Div., 15/F Philips Ind. Bldg., 24-28 Kung Yip St., KWAI CHUNG, Tel. (0)-24 51 21.
India: PEICO ELECTRONICS & ELECTRICALS LTD., Elcoma Dept., Band Box Building, 254-D Dr. Annie Besant Rd., BOMBAY – 400 025, Tel. (022) 493 0311/493 0590.
Indonesia: P.T. PHILIPS-RALIN ELECTRONICS, Elcoma Div., Setiabudi II Building, 6th Fl., Jalan H.R. Rasuna Said (P.O. Box 223/KBY) Kuningan, JAKARTA 12910, Tel. (021) 51 79 95.
Ireland: PHILIPS ELECTRICAL (IRELAND) LTD., Components Division, Newstead, Clonskeagh, DUBLIN 14, Tel. (01) 69 33 55.
Italy: PHILIPS S.p.A., Div. Componenti, Piazza IV Novembre 3, I-20124 MILANO, Tel. (02) 6752.1.
Japan: NIHON PHILIPS CORP., Shuwa Shinagawa Bldg., 26-33 Takanawa 3-chome, Minato-ku, TOKYO (108), Tel. (03) 448-5611. (IC Products) SIGNETICS JAPAN LTD., 8-7 Sanbancho Chiyoda-ku, TOKYO 102, Tel. (03) 230-1521.
Korea (Republic of): PHILIPS ELECTRONICS (KOREA) LTD., Elcoma Div., Philips House, 260-199 Itaewon-dong, Yongsan-ku, SEOUL, Tel. (02) 794-5011.
Malaysia: PHILIPS MALAYSIA SDN BHD, Components Div., 345 Jalan Gelugor, 11700 PULAU PINANG, Tel. (04) 870 044.
Mexico: ELECTRONICA, S.A de C.V., Carr. México-Toluca km. 62.5, TOLUCA, Edo. de México 50140, Tel. Toluca 91 (721) 613-00.
Netherlands: PHILIPS NEDERLAND, Marktgroep Elonco, Postbus 90050, 5600 PB EINDHOVEN, Tel. (040) 783 749.
New Zealand: PHILIPS NEW ZEALAND LTD., Components Division, 110 Mt. Eden Road, C.P.O. Box 1041, AUCKLAND, Tel. (09) 605-914.
Norway: NORSK A/S PHILIPS, Electronica Dept., Sandstuveien 70, OSLO 6, Tel. (02) 68 02 00.
Pakistan: PHILIPS ELECTRICAL CO. OF PAKISTAN LTD., Philips Markaz, M.A. Jinnah Rd., KARACHI-3, Tel. (021) 725 772.
Peru: CADESA, Av. Pardo y Aliaga No. 695, 6th Floor, San Isidro, LIMA 27, Tel. (014) 707 080.
Philippines: PHILIPS INDUSTRIAL DEV. INC., 2246 Pasong Tamo, P.O. Box 911, Makati Comm. Centre, MAKATI-RIZAL 3116, Tel. (02) 868 951 to 59.
Portugal: PHILIPS PORTUGUESA S.A.R.L., Av. Eng. Duarte Pacheco 6, 1009 LISBOA Codex, Tel. (019) 683 121.
Singapore: PHILIPS PROJECT DEV. (Singapore) PTE LTD., Elcoma Div., Lorong 1, Toa Payoh, SINGAPORE 1231, Tel. 350 2000.
Spain: MINIWATT S.A., Balmes 22, 08007 BARCELONA, Tel. (03) 301 63 12.
Sweden: PHILIPS KOMPONENTER A.B., Lidingövägen 50, S-11584 STOCKHOLM, Tel. (08) 782 1 000.
Switzerland: PHILIPS A.G., Components Dept., Allmendstrasse 140-142, CH-8027 ZÜRICH, Tel. (01) 488 22 11.
Taiwan: PHILIPS TAIWAN LTD., 150 Tun Hua North Road, P.O. Box 22978, TAIPEI, Taiwan, Tel. (02) 712 0500.
Thailand: PHILIPS ELECTRICAL CO. OF THAILAND LTD., 283 Silom Road, P.O. Box 961, BANGKOK, Tel. (02) 233-6330-9.
Turkey: TÜRK PHILIPS TICARET A.S., Components Department, Inönü Cad., No. 78-80, 80090 Ayazpasa ISTANBUL, Tel. (01) 143 59 10.
United Kingdom: PHILIPS COMPONENTS Ltd., Mullard House, Torrington Place, LONDON WC1E 7HD, Tel. (01) 580 6633.
United States: AMPEREX ELECTRONIC CORP., 230 Duffy Avenue, P.O. Box 560, HICKSVILLE, L.I.N.Y. 11802, Tel. (516) 931-6200. (Active Devices & Materials) AMPEREX SALES CORP., Providence Pike, SLATERSVILLE, R.I. 02876, Tel. (401) 762-9000. (Colour picture tubes – Monochrome & Colour display tubes) PHILIPS DISPLAY COMPONENTS, 50 Johnston St., SENECA FALLS, N.Y. 13148, Tel. (315) 568-5881. (IC Products) SIGNETICS CORPORATION, 811 East Arques Avenue, SUNNYVALE, CA 94088-3409, Tel. (408) 991-2000. (Passive & Electromech. Dev.) MEPCO/CENTRALAB, INC., 2001 West Blue Heron Blvd, RIVIERA BEACH, Florida 33404, Tel. (305) 881-3200.
Uruguay: LUZILECTRON S.A., Avda Uruguay 1287, P.O. Box 907, MONTEVIDEO, Tel. (02) 985 395.
Venezuela: IND. VENEZOLANAS PHILIPS S.A., c/o MAGNETICA S.A., Calle 6, Ed. Las Tres Jotas, App. Post. 78117, CARACAS, Tel. (02) 239 3931.

For all other countries apply to: Philips Components Division, International Business Relations, P.O. Box 218, 5600 MD EINDHOVEN, The Netherlands, Telex 35000 phtcnl

AS65
© Philips Export B.V. 1988

All rights are reserved. Reproduction in whole or in part is prohibited without the prior written consent of the copyright owner.

The information presented in this document does not form part of any quotation or contract, is believed to be accurate and reliable and may be changed without notice. No liability will be accepted by the publisher for any consequence of its use. Publication thereof does not convey nor imply any license under patent- or other industrial or intellectual property rights.

Printed in The Netherlands Date of release:

9398 149 60011

Philips Components

PHILIPS

PHILIPS